Primis Online

Music

Full Ebook
Strange: Electronic Music: Systems, Techniques, and

McGraw–Hill
Primis

McGraw-Hill
A Division of The McGraw-Hill Companies

McGraw–Hill Primis

ISBN: 0–390–68463–5

Text:

Electronic Music: Systems, Techniques, and Controls
Strange

This book was printed on recycled paper.

Music

http://www.mhhe.com/primis/online/

111 MUSIGEN ISBN: 0–390–68463–5

Contents

Strange • *Electronic Music: Systems, Techniques, and Controls*

Foreword
by Gordon Mumma

When in 1972 the first edition of Allen Strange's *Electronic Music: Systems, Techniques and Controls* was published, the magenta, blue and white covered book rapidly became ubiquitous. It was the first comprehensive and useful guide to the subject, and was relatively easy to obtain. It had occasional errors of detail, and was involved in the technological tumult before general standards were agreed upon, so that some of the illustrative graphic symbols became relics. Nonetheless, that edition proved quite robust.

At least two factors explain the first edition's survival for nearly a decade. Firstly, Allen Strange organized the relatively new and complex material so that it evolved with pedigogical sensibility. Secondly, his explanations of conceptual matters were lucid. This lucidity may be due to a balance in the author's own world. He is an experienced performer of electronic and acoustical instruments, a versatile composer, a historian-theorist of diverse cultural background, and a very effective teacher.

In the ensuing years several other books on the subject appeared. Some contributed updated material, and others devoted more attention to certain areas, though often at the expense of others. In spite of the example set by Allen Strange's book, none of the others seems to have achieved his balanced presentation. And few matched his marvelous attitude towards the subject, an attitude which induced the reader to be alert to the many possibilities of a rapidly developing creative medium.

This second edition, as the author notes in his preface, is in many respects a new book. But it repeats that most important achievement of the earlier edition: it is a comprehensive, detailed, and clearly organized guide to working with the instruments and technical procedures of electronic music. Besides the expected updating which includes many devices and procedures developed during the 1970s, the author continues his method of explaining details within the context of general operating principles. This makes the book applicable to virtually any analog electronic music apparatus.

In its relatively short history—a bit more than half a century—music made with electronic and electro-acoustic means is well on its way to becoming as pluralistic as that produced during many centuries with purely acoustic resources. It already has both "cultivated" and "vernacular" traditions, which are widely disseminated by broadcasting and recording throughout every part of the world. A major part of recent popular and commercial music would not exist without synthesizers and the creative use of multi-track recording. The recording studio, whether the relatively simple home-variety or a multi-million dollar commercial facility, has itself become a musical instrument—in Brian Eno's words, "a compositional tool." Electronic music has even developed "folkloric" aspects. Electronic sensors originally designed to detonate anti-personnel weapons are now used as components of public-access electronic-music environments in shopping centers and galleries. This is certainly analogous to the use of cast-off oil drums in the making of steel-band music.

As with Allen Strange's earlier book, this new edition will continue to be an important text for schools and universities. But perhaps more important, in a time of declining support for arts innovation in educational institutions, this book will be vital to creative people who develop their work independently.

Preface

The original edition of this text was completed over ten years ago. Compared to this new edition the original writing was a very simple task. In 1970 there were only three or four commercially available instruments —today the number has increased to over thirty. What was in 1970 a basic instrument format has expanded in many directions as there are available instruments. Each manufacturer has a different design format and different implications in terms of the application of the instrument. To cover such a subject area called for a complete rewriting of the text. Due to the incredible growth in the field of electronic music instrumentation the subject matter covered in this present text has nearly doubled that of the first edition. In a sense it is inaccurate to refer to this as a second edition; it is really a second book created out of the ever expanding field. At the same time this new version makes no claim to cover every possible resource and technique available to today's musician. This text does, however, deal with all of the generally accepted designs and techniques common to today's electronic instruments. The instructor and reader will find that it provides a firm and basic foundation of understanding which allows the user to develop the techniques and processes specific to an individual instrument or studio situation.

Regarding pedagogic technique, I know of no two people who approach this extensive subject in exactly the same manner. The organizational approach to teaching electronic music is greatly dependent on the resources of the instrument and the resources of the studio. Instrument X may be very keyboard oriented, implying one approach, while instrument Y is based on pre-programming and suggests a completely different orientation and approach. Some studios are designed around multitrack recording facilties, while others exist strictly as real-time performance spaces with little or no recording equipment. Some electronic music programs are compositionally oriented, while other programs deal only with techniques and problems of instrument performance. This book is organized in a manner which is adaptable to any approach. Each chapter is a progressive overview of the *what* and *how* of electronic instrumentation. Beginning with a discussion of what "electronic music" means in this decade, each chapter progresses from the basic considerations of electronic sound through basic techniques of control to advanced process of instrument patching and sound modification.

The reader should not consider this to be a text on electronic music composition. Composition texts can do more than explain either general or specific techniques of organization and structural manipulation. When it comes to the "composing," this must be dealt with on a personal, one-to-one relationship between student, instructor, and the specific composition at hand. This book is simply a text on "technique": how to operate the instruments with various insights on developing a consistent working method. Specific composition assignments or "etudes" have to be designed by the instructor, as appropriate to the given resources of a studio. There are certainly compositional implications of many of the patches and techniques explored in this book. A particular mode of control or routing of the signal patch through various modules determines the variables of a musical situation. The performer's manipulation of these variables is up to the individual, and he/she should be able to explore the possibilities outside of any aesthetic I might be prone to dictate. I have my own set of assignments specific to my studio's resources, and I would expect that every other teacher has his or her own set of specifics.

While every instrument has its own unique characteristics, the general operational principles remain the same. With every instrument the performer must deal with basic problems of routing signals through various shaping and modification devices, establishing operational norms and configuring ongoing controls to produce the desired event. The signal flow through any instrument begins with the sound source, goes through selected modification circuits, and each circuit is assigned some form of control, be it manual manipulation or different kinds of pre-programming. This text is organized in the same way the instrument is organized. The initial chapters deal with the basic sonic resources available to the musician. After the introductory considerations each chapter is profusely illustrated with patch diagrams and examples of extant equipment. Several of the unique features available on certain instruments are described in a general manner, with the explanation that in many instances these features can be replicated on other instruments. Chapters 4 through 13 are dedicated to various techniques of control and sound processing. In these chapters the initial "basic patches" are logically expanded and notated in a unified format. At the end of the appropriate chapters there are projects and exercises intended to enhance the reader's understanding of various techniques. These projects and exercises have been suggested by colleagues, and range from conceptual problem solving to the realization of compositions by different composers. The last third of the text deals with techniques and devices usually external to the actual performance instrument. Basic techniques of mixing, tape recording, stereo and quadraphonic considerations, as well as performance electronics are covered in sufficient detail to give the reader a substantial point of departure for advanced development.

This book is not meant to be a substitute for an instrument's operation manual or a general handbook for a given studio; rather, it is a basic organizational guide for learning. While many detailed techniques are discussed, the specific patching format and specific techniques have to be left to the individual instructor and the manufactuerer's own documentation. Every studio has a different design which is applicable to itself; and this text makes no attempt to describe a specific studio format. Such information must be left to the instructor, and most of the initial class discussions deal with the layout and general operation of a given studio. Because we present as many of the resources as are generally available, we realize that the reader may find some of the material redundant or too technical, depending on the goals of the class. The instructor should design the reading assignments in consideration of this fact. Certain material may be irrelevant to some situations and can easily be excluded. Each chapter does, however, begin with the bare essentials of a subject area or technique and will be applicable to every instrument. The teacher will also find it necessary to augment certain portions of this text, discussing devices and techniques specific to a studio's own resources.

This present text contains over 400 illustrations designed to clarify, to demonstrate, and to expand the reader's understanding of the techniques of electronic music. At the same time it is recommended that the reader keep a notebook of patches developed in class or on his/her own studio time. Such patch libraries prove invaluable as references while developing new skills and techniques. At the end of each course I have found it useful to make a class project out of compiling all of the most useful student-generated patches into a single document for future reference. Another activiity I have found very useful to students is to have certain patches and techniques documented on tape. Any patch can potentially generate a wide range of sounds, depending on the fine adjustment of the various controls, and sonic models can be very useful as guides for the beginning student. Each student may also wish to keep a personal library of recorded patches. Various patch assignments can be recorded on a cassette tape by the students and indexed to a specific diagram in a patchbook.

The readers who are first beginning the study of electronic music outside a controlled class situation are encouraged to deal with the subjects as they appear in sequence in this text. This will insure continuity of subject matter and avoid encountering undefined terms. The class instructor undoubtedly has his or her own approach to which my approach may be perfectly applicable. Or the instructor may wish to rearrange the sequence of the middle chapters to accommodate his own methods. This is certainly to be encouraged, as each chapter attempts to be as independent as possible. The problem of undefined terms due to re-sequencing is solved by cross-references and an extensive index. Certain definitions and clarifications can also be presented by in-class lectures.

During recent years low cost technology and the development of the micro-processor have generated much interest in digital applications to the analog electronic music system. At the present time there are several operational systems which make computer control of electronic instruments very attractive. It would be redundant to attempt to rewrite the documentation of these systems for this text since such information is available from more direct sources. The reader, however, will be introduced to some of these approaches, and certain instruments specifically designed for local and/or computer control will be covered. Digital control, at this point at least, is providing for more accessible and accurate performance techniques in terms of establishing and recalling complex situations. It is also providing for the expansion of a particular instrument's capabilities in terms of more complex functions. This means that the computer is increasing the efficiency of what these instruments can usually do. The concepts of voltage control and parametric design are the same with or without computer aid, and at the present time a separate chapter dealing with digital control is not warranted. The number of digitally controlled studios is limited and their operational procedures are usually unique. Until some common ground for digital control has been established in commercially available instruments, in-depth documentation is best left to the manufacturer. At the present time certain companies offer instruments specifically intended for digital control. These devices will be dealt with in a context established by their musical function. For example, a digitally controlled amplifier is still an amplifier and serves the same parametric function irrelevant of manner of control.

Modern digital technology has provided the musician with some exciting new handles on musical structure, especially in the area of time manipulation. These instruments, with their basic operational methods and musical applications, have opened up some possibilities for the musician which ten years ago were considered impossible. In spite of these instruments' dependence on digital sound reconstruction, their operational modes are compatible with modern analog equipment and will be discussed with basically the same vocabulary.

On the other side of the coin this book does not concern itself exclusively with 'hi-tech' electronic musical instruments. Today's state-of-the-art had its beginnings with non-musical devices forced into a music-making chore. This is a healthy attitude for the arts and is not to be discouraged. Techniques involving extant equipment other than commercially available instruments will be dealt with if those techniques provide a workable music-making situation, and any supportative literature for these applications will be documented. In certain situations a mailing tube and a microphone may make a very suitable oscillator (see page 207), and bits of editing tape can be used to articulate complex rhythmic sequences. Some may find these types of jury-rigged techniques far from sophisicated but if they work, then they work! After all, there must be some reason that the muscians' activities are often called 'playing.'

The last chapter of this book is concerned with the final task of the musician—the making of music. Several composers have been kind enough to make their scores available specifically for the purpose of analysis and performance. These works appear in their original format as designed by the composers. Each score is given in its complete form and is intended to be realized by those users with the proper resources. Even if performance is not practical a detailed analysis of each work will be time well spent. Since a score can never completely represent the musical event, four of the five works are available on Dolby cassettes specifically as performance models. For information concerning these tapes please write to Ocean Records, #4 Euclid Avenue, Los Gatos, Calif., 95030.

Acknowledgments

To acknowledge every person who contributed to the development of this book would be impossible. This is a standard first line for acknowledgment statement and it is unfortunately true. Perhaps the greatest help came from my students. Their feedback and never ending questions helped me clarify in my own mind just what needs to be said about the subject of electronic music. Of no less importance was the help of Robin and Pat Strange who tolerated my hours of isolation in the studio preparing this manuscript. Special thanks go to the many instrument designers who willingly provided me with documentation, photographs and hours of telephone conversation answering my questions. Of these, special mention must be made of Harald Bode of Bode Sound Company, Scott Wedge, Ed Rudnig and Marco Alpert at Eu Instruments, Robert Moog of Moog Music, and Donald Buchla of Buchla and Associates. Last but certainly not least special thanks go to all of the composers and performers who suggested techniques and supplied scores. Without these artists there would be very little need for the instruments and certainly no need at all for this book.

Allen Strange

1 Preliminary Statements about the Subject Matter

The term "electronic music," a common post-1950 term, has been the source of a certain amount of misunderstanding among musicians and audiences. Prior to the 1960s it usually referred to a type of music characterized by presentation on pre-recorded tapes. The phrase itself often called to mind a music based on discordant sounds and angular structures. I certainly do not wish to imply any negative value judgments about early electronic music but am attempting to identify some generalized characteristics in order to explain a generalized aesthetic comment. To the non-practitioner, there was little or no distinction between the various schools of *musique concrète* and 'pure' electronic music. While pre-1960 electronic music resulted in many significant compositions and was the catalyst of the research that led to present day electronic instruments, there is some basis to this generalized electronic music aesthetic that still lingers in the minds of many people.

Even today one might attend a concert of new 'acoustic' music concerned with new timbres and unusual structural relationships and hear the comment that it "sounded like electronic music"! What is the reason for this association? The early history of electronic media in music was a period of experimentation with very little prior history to provide direction. Schaeffer and the *musique concrète* group made music with whatever sound they could capture on disc, wire or tape. Eimert and Stockhausen, representing German *elektronische musik*, heralded the use of the electric oscillator as the source of 'pure' electronic music; the Columbia-Princeton school was coaxing music out of a $250,000 computer and capturing it on tape. What expressions in that decade had in common has had a significant role in formation of the layman's concept of electronic music today.

Looking back on the years between 1950 and 1960 one's first observation is that the practitioners were making music with devices designed for other purposes. The tape recorder, the oscillator and early computers were designed as tools of science and not tools of art. Prior to that time our musical traditions told us that musical instruments were plucked, bowed, blown into, or struck, and these actions enabled us to reproduce a history of musical thought. When the computer, oscillator, and tape recorder were given the role of a musical instrument, pluck, bow, blow and strike were joined by a plug in, punch, turn and splice! The musician was busy making music on instrumentation not designed for conventional musical use. Since the generation and control of sound on these devices were generally foreign to our traditions *at that time*, it was only logical that the resulting music would be proportionately removed from the norm. The results brought to light some forgotten basic ideas about music, specifically about musical instruments.

To discuss musical instruments in a manner relevant to electronic media calls for a re-orientation relative to what we may assume to be a simple subject. We all know what musical instruments are—they are things we play and make music with! This straightforward definition implies some rather far reaching concepts which may appear to be simultaneously quite simple and somewhat technical. However, I think that the patient reader will benefit by considering the following ideas. Any musical instrument requires at least three things: a method of playing (input or perhaps stimulus), structural organization of the object being played, and a resulting sound (output or response). A violin is bowed or plucked, it is made of wood with strings attached and tuned in a prescribed manner and it produces a sound that we identify with that input and structure. A laboratory oscillator has a dial which is turned (input), it is made of a specific collection and organization of electronic parts (structure) and it behaves like a laboratory test oscillator. A violin possesses the structure and inputting capabilities which make the production of virtually any specific pitch within a four octave range a simple matter for the trained player. A laboratory test oscillator, while capable of a far greater range, cannot readily produce the specific pitch patterns found in pre-1950 musical literature. One can imagine trying to play a Bach "Partita" by manually turning the dial on the front of an oscillator. At the same time, however, it would be very difficult to coax a smooth ten octave glissando with a consistent timbre out of a violin. Thus the nature of a musical instrument,—its input, structure and output,—defines the musical characteristics of that instrument. What really makes an instrument musical is that a musician decides to make use of it.

This may all seem rather obvious, but may serve to answer some basic questions and provide us with guidelines to the functions of electronic media in the sonic arts. During the decade between 1950 and 1960 composers and performers were making music on instruments not designed for conventional performance. The task of inputting or playing was difficult, and performance of any kind of pre-existing musical literature was almost impossible. Even simple sequential event structures were difficult to achieve. In this situation one can readily understand that one reason for the seemingly radical sounds of early electronic music was partly due to the fact that the musicians could generate such sounds with relative ease. Music exists in a continuum of time and time will not wait for one to find the next pitch on an oscillator or program a new set of instructions for a computer. There were two obvious solutions to the problem. One was to build a new kind of music to accommodate the type of instruments used. If precise pitch at specific times was difficult to attain, then make a music that took advantage of the things these instruments *could* do—such as extreme glides, non-fluxuating timbres, expanded dynamic ranges and so on. Hence—our first models for the "electronic music." The alternate solution to the problem was, in essence, to stop time in order for the performer or composer to rearrange his collection of instruments, making ready for the next event. In the field of electronic music the tape recorder is an instrument which provides for this need.

To produce a precise sequence of pitches on a laboratory test oscillator one finds the starting note, records it, turns off the tape recorder; finds the second note, records that, turns off the tape recorder; finds the third note and repeats this process until the sequence of desired notes are on the tape. He then cuts the tape into lengths which produce the desired rhythmic pattern and puts it all back together again with splicing tape. The tape recorder then reproduces a five second stream of pitches the composer needed thirty minutes to construct. The reason for this out-of-time performance was that the generating instrument, in this case an oscillator, did not have the inputting capabilities needed to produce the desired event in real-time. The two obvious solutions to this problem were to evolve the literature to suit the instruments or to develop the instruments to suit the literature. The evolution of technology and consciousness provided both. The development of new musical instruments has continued to remind us that we can make music out of anything from which we choose to make music. There is more to the art of sound than twelve pitches, bowing, blowing, plucking and striking. Many of what seemed like definitely unmusical events in 1950 are now quite acceptable, even to the conservative ear. The revolutionary music from the Columbia-Princeton studios during the early and middle 1950s is very tame compared to today's orchestral music by composers such as Iannis Xenakis. Along with the evolution of our aesthetic, the instrumentation itself underwent significant development. Alterations in oscillators were made, which allowed the performer to control precise pitch change in real-time. We learned that workable performance modes could be developed for the musician. Oscillators and other artifacts once designed for the communication studio were redesigned to accommodate a wide variety of musical thought. By the early 1960s electronic devices dedicated exclusively to the production of music were available. The composer in the electronic medium no longer had to work within narrowly defined limits, nor was it necessary to manipulate the flow of time with a tape recorder. Contemporary electronic musical instruments are devices capable of a wide range of inputs, structures and resulting sounds—all of which are decided and implemented by the composer/performer.

A trip to the local record store provides substantial insight into the current state-of-the-art. In the bin marked "Electronic Music" one can find works by John Cage, Milton Babbitt, reorchestrations of masterpieces ranging from Monteverdi to Stravinsky, a variety of popular artists ranging from Herbie Hancock to Klaus Schulze, contemporary masterworks by Morton Subotnick, the Sonic Arts Union, and Karlheinz Stockhausen; and I am sure this bin has grown significantly since this text went to the printer. If such a wide variety of music is listed as "electronic music," then the term cannot possibly refer to any single aesthetic production. What am I talking about when I say this is a book about electronic music? What is it that all of those records have in common? The answer I provide and one which is the basic premise of this text is *instrumentation* and *orchestration*.

The purpose of this book is to guide one in the technique of playing electronic instruments. Beware of the simplification of that statement. The subject matter is a bit more complicated than might be imagined at this point, and the complication is due to the nature of these instruments. A woodwind, string, brass or percussion instrument is structurally constant. Performance modes have been established which accommodate their structure and their sounds can be precisely predicted. The reason a clarinet, trumpet, viola, whatever, exists as a workable musical tool is because it has a fixed structure which is based on a given set of performance modes to provide a consistent response.

Whenever the composer, through whatever suitable notation, instructs a performer to produce a certain pitch by bowing a string, he is calling for a known event to be produced. If he tells the performer to change the nature of his input, perhaps to pluck the string, he is still operating within a set of known performance modes and resulting sounds. This is possible because the instrument is a fixed instrument—its structure being the result of its technical evolution tempered by the demands of its evolving literature.

Most electronic instruments, specifically the ones to be dealt with in this book, are not fixed instruments. The contemporary electronic music system has no pre-defined structure, but is initially a collection of possibilities—a set of musical variables or parameters such as pitch, loudness, space, timbre, etc., that exist in an undedicated state. The contemporary electronic music system offers several potential means for pitch control; it has capabilities of shaping articulation and loudness; it provides many methods for the control of timbre and density, and so on. All of these possible sources and controls are components of a yet to be produced musical event. The art of electronic music involves organizing these parameters into desired structural relationships, coming to some decision about performance modes suited to the situation, and finally, dealing with the task of actually playing the instrument to produce the musical experience. For example, a composer or performer may require a two octave ascending glissando from an instrument that has a very harsh, metallic sound. In one situation it may be convenient for the musician to produce that event by turning a knob. In another situation it may be more convenient to produce the same event by touching a key, illumination of a light, or even by slamming a door! Or perhaps he wishes for that door slam to set off a 16 note sequence of pitches, while playing a keyboard causes the sound to spin around the room in various patterns. In another situation the harshness of the sound may be determined by some internal biological function such as the performer's brainwave activity or perhaps by an external natural function such as the air temperature in the room. The real task at hand is the conception of the musical structure and event and then deciding what sort of stimulus or action will call forth and/or alter those events. To the reader not familiar with current electronic music literature or instrumentation these examples may appear to be far fetched. As unlikely as they may seem, they are viable methods of controlling electronic sound and serve to illustrate the range of performance modes open to the musician today.

In the earlier edition of this book I reacted against the use of the word "synthesizer" as applied to contemporary electronic musical instruments. Too often that term has led to such phrases as 'synthetic music' and 'synthetic sound.' Although I hold with my initial viewpoint, the term is meaningful but in a different sense than was originally implied. If synthesis refers to building up from component parts, what is being synthesized are musical instruments. (Perhaps the instruments should be called "synthetics" and the players could then be called the "synthesizers!")

There are some final observations which should be made in defining the scope of the subject matter in this book. This is not a text on music theory, composition, or detailed recording techniques. Thus it is assumed that the reader possesses the basic academic skills such as note reading. This work is written for the musician from a practical musical viewpoint. It explains how to approach, structure and play very idiomatic instruments. An experienced composer knows that it is difficult to compose for idiomatic instruments unless he has some working knowledge about them. The guitar and harp are good examples of this. If one wishes to compose for an instrument he should have a basic knowledge about what that instrument is capable of doing and how it is done.

Dealing with the concepts of parametric organization, voltage control, and tracing patch connections is certainly enough for the beginner, without having to be concerned with the graces of compositional gesture, at least in the initial stages. This is not meant to remove composition from the realm of this study, but rather to point out that dealing successfully with composing for an idiomatic situation requires adequate working knowledge of that idiom. The approach to be used here is to deal primarily with the task of learning the sonic vocabulary of the electronic medium and developing the intellectual and performance skills needed to bring those sounds to life. The act of composition involves primary decisions about 'when' and 'how long' an event is to occur. The 'when' and 'how long' are aesthetic decisions borne out of compositional attitudes. This book can instruct one about how to make sure things happen 'when' they are supposed to and offers techniques for controlling 'how long.'

Although certain compositionally based etudes and tutorially valuable scores will be suggested as a means for exploring a specific technique available on the instruments, large scale compositional assignments are best left to the discretion of the instructor where they can be tailored to meet individual situations. This is also not to say that electronic instruments have not contributed new ideas to the discipline of composing. Since the art of electronic music involves structural design it brings with it some new methods and slants on traditional manners of organization. Electronic instrumentation has also given us a new handle on the parameters of time and space, actually offering us some new things to compose with. These areas will be covered, and their suggested applications hopefully will lead to some new ideas for the composer. But it should be recalled that the purpose of this book is to teach the user to play the instrument. Not everyone involved with electronic music is especially interested in composing. And I am quite sure that the more competent performers of electronic instruments there are, the happier the composers of electronic music will be.

Parametric Design

A teacher of any subject matter has a two-fold responsibility; to be proficient and knowledgeable about the subject matter; and to be familiar with the pedagogy of the subject. As of this writing I know of no generally accepted pedagogic method in the area of electronic music. How does one go about learning and teaching in this field? Perhaps the very nature of the subject as it has been expounded in the previous pages makes a single teaching approach impossible. A consistent approach is only possible when one has become aware of the consistencies in the subject matter.

In the previous paragraphs I have gone to some length to illustrate what I believe to be a consistent concept in this area. This is the instruments' ability to be structured according to an immediate musical need. A successful practitioner in the field of electronic music is one who can: 1) envision a musical event (either of his own or others' invention); 2) demonstrate the musical knowledge and technical skills to set up the instrument to produce the required events; and 3) finally possess the artistic sensitivities to bring the event to life—independent of whether he is in a compositional studio environment or a real-time performance situation. This book is designed to deal with two of these three areas.

The reader will be exposed to certain operational principles which are common to all current electronic musical instrumentation. These principles are based on two concepts: *parametric design* and *voltage control.* The study of brass instruments teaches one to deal with the production and control of sound in terms of resonating tubes. Likewise, the early chapters will show the reader how to view a musical event as a set of electrical analogs. The pitch, loudness and timbre of a vibrating string can be described in terms of that string's activity. In the same manner, the produced pitch of an electronic instrument is described as electricity behaving in a certain manner. Electronic instruments provide a collection of circuits (in some cases called "modules") which provide control over one or more elements of a musical situation. Structuring a musical event is a process of isolating those elements needed for the particular situation at hand, and then prescribing a set of controls that will enable those elements to work together in the most efficient manner possible.

Parametric design is an analytical process in which one envisions the individual and corporeal influences of all of the parameters of an existing or imagined sound. One will learn that parametric activities are not isolated from one another. Pitch influences loudness, loudness influences timbre, timbre, in turn, influences pitch, and around the circle goes. Thus, in deciding how to obtain the desired results from an electronic instrument one must be familiar with the roles and limitations of each part of the instrument, as well as possess a basic understanding of the psycho-acoustic nature of what he is going after. As these electrical analogs of sound are explained, they will be accompanied by whatever psycho-acoustic information is needed to make the behavior of the instrument meaningful in a musically perceived situation. Once one is able to describe an event parametrically that description has to be transferred to the instrument. This is a physical or kinesthetic process of interconnecting various parts of the instrument through switches, patchcords or whatever, and turning knobs. The mathematics used here will not go beyond elementary multiplication; and discussion of internal circuitry will be almost non-existent. Those interested in the more detailed and technical aspects of this field are referred to the annotated bibliography at the end of this book.

Voltage Control involves the physical assignment of various types of electronic activities to specific parts of the instrument, and the production and routing of those controls comprises the actual performance techniques. Such controls are in the form of steady and fluctuating voltages. Some voltages are pre-programmed to come into play by the touch of a switch, others are more efficiently handled by manual means in real-time. Voltage control techniques are given prime attention in this course of study, since this is the basic operational principle behind current electronic music instruments. The subject matter of this book ends at this point.

It is within the scope of the text to prescribe methods of electronic sound production, to provide illustrative models by means of exploratory etudes, and to suggest supportive literature in the form of recordings and scores to stimulate creative thinking. It is not within the scope of this text to dictate musicianship or aesthetic direction. Musicality is something the student or teacher must bring into the situation on his own. Aesthetic applications are so numerous that I would not attempt to represent any others but my own, and since my own are those only I am expected to agree with I prefer to avoid the subject as much as possible. Any references to literature will be in terms of successful models of specific techniques; and the student is urged to expand on these models. The student is urged to not be limited by such references, this text included, or by the front panel graphics of an instrument. Try everything! Never wonder "should I do this?". Instead an attitude of "I wonder what will happen *when* I do this?" may lead to an expansion or development of a unique technique. A designer may manufacture a device to satisfy a specific musical need, and an innovative musician may discover that the device suits many other needs which never entered the mind of the designer. For the most part current electronic instruments are "student proof," so that anything one has access to through the front panel cannot cause any damage. In the case of a blown circuit one can be comforted by the fact that electronic instruments are usually easier to repair than acoustic ones. Please don't interpret these remarks as though the instruments are indestructible. Realize that they are musical instruments and require the same care as any fine instrument. But still, if you have an idea—give it a try.

After the basic concepts described above have been dealt with, the subsequent chapters will be individually dedicated to the exploration of techniques and processes relevant to specific parameters and situations. At this point there arises an organizational situation which only the user can solve for himself. A composite musical event treats all of the parameters collectively. Pitch, loudness, tone color, space, etc., all happen at the same time. But a successful approach to the electronic media demands individual attention to these parameters, at least in the initial stages. We have to consider pitch, loudness, etc., as independent variables in the learning stage, but we all know that music does not occur as a set of individual variables. If I were trying to describe how to imitate the music of a particular composer it would be a relatively easy task to approach and organize all the parameters in a manner that would articulate a particular style. The same can be said of a situation in which one was also concerned with teaching the basics of music through electronic instruments. Nevertheless, in dealing with the "how to" of highly idiomatic instruments the teaching reference should be as variable or "modular" as the instruments it represents. To some situations it may be more useful to deal with the chapter on tape recording as an introduction to the subject area. Those interested in live performance may find that tape techniques have little to do with their anticipated applications. Those with limited instrument facilities may find the chapters on modulation techniques go into much more detail than the instrument can accommodate, while persons with access to larger instruments will find these chapters essential.

Whatever the case, if you continue to develop your techniques and instruments, all of the information here will be applicable at some point, therefore, don't sell the book when you finish it!

Patching and Notation

Since the synthesizer is not a "fixed" instrument the musician working with electronic instruments has a two-fold notational responsibility; 1) the notation of the musical events and 2) the notation of how the instrument is configured. In spite of many national and international attempts to codify a notational system each artist still continues to use whatever method suits his or her own needs (this actually depends on the templates and press-on letters the artist has available at the time!). This text will be as consistent as possible, but it should not be taken as an attempt at universal codification. The evolution of music itself resulted in and is still causing changes to the notational system. As new instruments and new processes are developed the various patching notations will change. At the present time, however, the system used in this text is clear and easily understood. The prime concern of this system is that the notation be relevant to practically any electronic instrument. Each instrument provides sound sources and means of modifying the sounds. Each system requires the performer to establish certain norms—to what pitch or frequency are the oscillators tuned? Where in the spectrum is the filter set? What is the initial setting of the amplifier? All of these variables are referred to as *offsets*. Such indications will be notated, when needed, directly next to the module to which the notation refers. As you will learn later in the text, all of the variables on an instrument are usually controlled in some manner by different functions on the instrument. A given control may affect a great change in a parameter (a four octave jump in pitch), or a minute change in a parameter (a ¼ tone change in pitch). The magnitude of the change is determined by how much a control is "attenuated," meaning literally to lower or reduce. In other words a given control may be "attenuated" or "processed" before it reaches the part of the instrument it will actually control. Thus the various "attenuation" or "processing" indications have to be notated, along with the offsets." Where attenuation specifications are critical the levels will be indicated next to the affected module. If the attenuation is variable the standard electronic attenuator symbol will be used as illustrated in fig. 1.1.

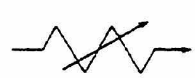

Figure 1.1. Attenuator

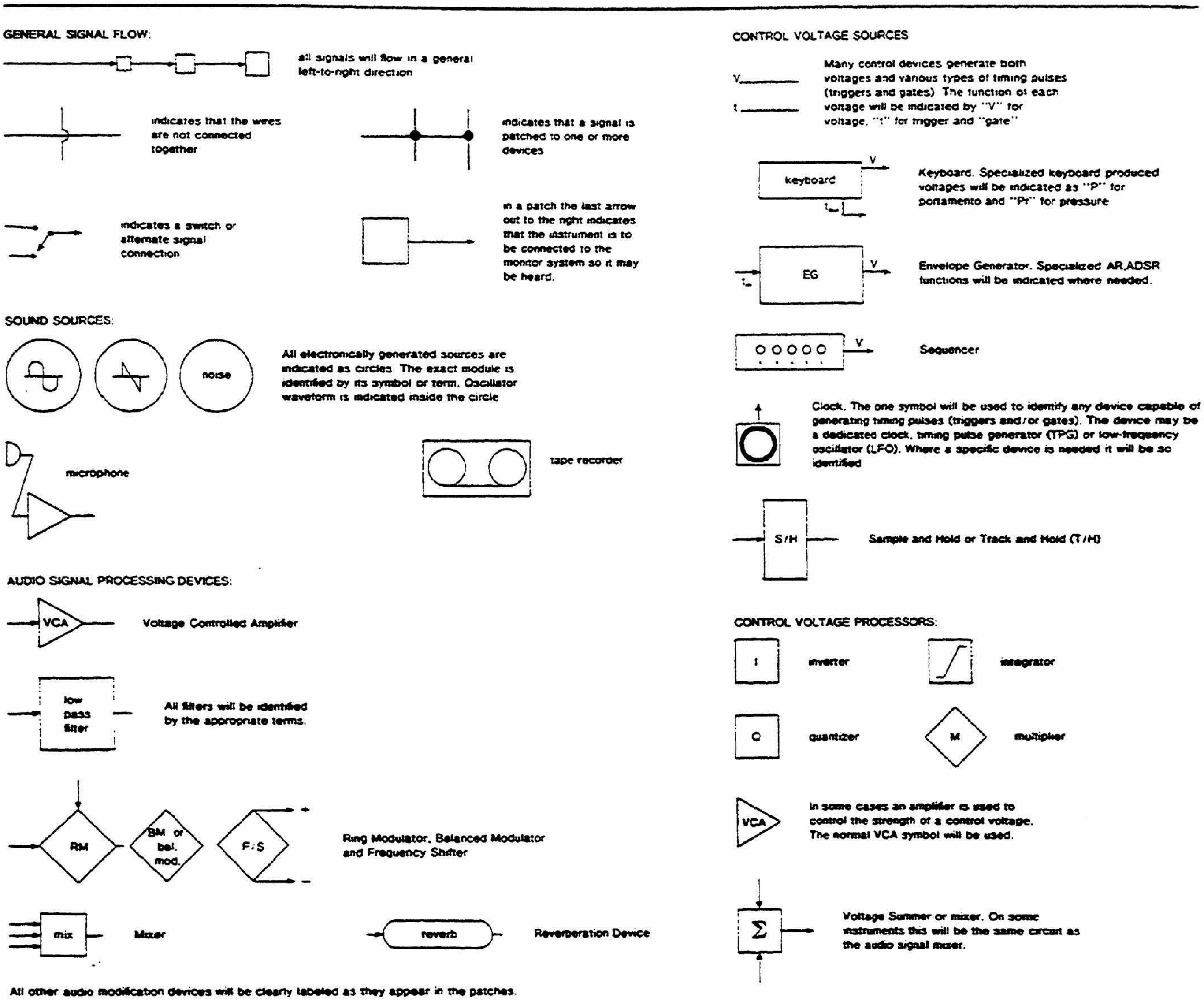

Figure 1.2. Notational symbols

Figure 1.2 illustrates the symbology for the basic devices found on electronic instruments. Although some of these terms may mean absolutely nothing at this point they are illustrated here because you will encounter them all very soon. Any specialized or unusual device encountered in a patch will be clearly identified in the diagram. Throughout this text there are several patch charts which are designed by the manufacturer for specific commercial instruments. Where needed a patch diagram of the chart indications is given so configurations may be transferred from instrument to instrument.

2 Considerations of the Basic Parameters of Sound

The purpose of this chapter is to give the reader a basic understanding of the technical side of the subject matter and to provide a point of departure for those who wish to rearrange the chapter order to suit their particular situation. Basic musical parameters are understood by all musicians; we relate to the basic variables of pitch, rhythm, loudness, timbre, etc., inasmuch as they are constantly under our control in conventional performance practices on acoustic instruments. Simultaneous control of relevant parameters is a skill developed through dedicated practice, and such control is a learned tactile response to some stimulus—be it a notated phrase, a conductor's direction, or one's own internal musical sense. Terms such as "more legato," "more articulate," "richer," "funkier," "straighter," etc. are adjectives or adverbs that call for alterations in almost all the ongoing parameters. To play "dirtier" or "cleaner" calls for alterations in pitch, loudness, articulation, and so on. This sort of response is a skill learned as a single performance variable through long term training that deals with simultaneous attention to many individual variables. We are traditionally taught to alter our playing response (i.e., style, techniques . . . whatever word is applicable) in reaction to a single stimulus. If the playing is not correct it usually means that many variables have to be altered in various degrees. When adjusting to a "baroque" manner of playing, a trained performer almost instinctively makes the proper adjustments without really thinking about all of the variables he is dealing with; his prime stimulus is the total musical sound.

As pointed out in the previous chapter, the one function that really characterizes electronic media for the musician is parametric thinking. We are consciously and separately attending to many different parameters. One must individually, yet simultaneously, be aware of and in control of pitch, (an oscillator), dynamics and rhythm (an amplifier), timbre (usually a filter), and a host of other variables still to be introduced. Taking care of all of these things at one time is a sizable chore, both mentally and physically. One aid in this task is the ability to view all the variables as a single concept. For example, a certain situation may call for a fuller, louder sound. Loudness is a parameter which has several contributing factors (as do all the parameters), but in terms of the physics involved it means ending up with more acoustic energy reaching the ear. In one case an increase in loudness may require turning up an amplifier. In another case it may involve decreasing the amount of mechanical reverberation, and in still another situation it may require a change in the timbral quality of the sound. All of these operations in turn involve a change in how the instrument is behaving, the end result being an increase in the energy that reaches the ear. Thus the musician is ultimately concerned with different manners of vibration.

Vibrations and Musical Sound

The production of any kind of sound, musical or otherwise, is due to rapid vibration of some object. With acoustic instruments a string, reed, membrane, etc., is forced into vibration and this causes its immediate surrounding air space to similarly vibrate. When these vibrations ultimately reach our ear they are perceived as sound. The characteristics of a particular sound are largely, but not exclusively, dependent on the manner in which the vibrating object is behaving. The object's physical structure, how fast it vibrates, how forcefully it vibrates, and several other factors, determine the final sonic characteristics that object is responsible for. Musical performance techniques can be thought of as actions applied to an instrument (inputs) which affect how that instrument vibrates. A trumpet player may press a valve to change the vibration rate of air in a metal tube; the same player blows harder to increase the force or amplitude of those vibrations. A string player changes finger placement on a string to change that string's vibration rate and simultaneously may press harder or softer with the bow to affect the amplitude of that vibrating string (its loudness). A mute placed across the bridge of a violin or in the bell of a trumpet is another performance input that changes the way the instrument responds, and this has various effects on tone quality. Many musical parameters involve the generation and alteration of vibrations.

Anything that vibrates within a certain frequency range and with enough force has the potential of being a sonic event. If you happen to be sitting in a room with fluorescent lighting at this moment you will probably be able to hear a faint pitch around the area of B♭. Florescent lights actually turn on and off at a rate of 120 times each second; this vibration rate is fast and strong enough to be perceived as a definite pitch. The device which helps produce the image on a home television screen scans back and forth on the picture tube at a rate of 15,750 times each second, producing a very high pitch. This fast frequency can be very annoying to persons with sensitive hearing. Musical pitches we refer to with letter names such as B♭, F, C♯, etc. actually describe different rates of vibration. The standard tuning reference for instruments in America assigns to middle "A" a vibration rate of 440 times each second. Every musical pitch refers to a specific rate of a vibrating string, tube, membrane, electronic circuit, etc.

Sound is multi-dimensional. One cannot perceive pitch without perceiving a sensation of loudness, tone quality, duration, and apparent source. Pitch is fairly easy to deal with because we have some well defined references; consequently it has been the most accessible musical parameter for the composer. Loudness is less clear, since there are not as many well defined limits and references. Loudness is perceived primarily as the result of how much or how forcefully something is vibrating. Stated a little differently, loudness is the result of how much air is displaced by the vibrating object. Blowing softly into a clarinet will produce a soft sound. Blowing harder into the instrument causes the reed to vibrate with more energy, resulting in a greater amount of air being displaced in the immediate environment, and hence a louder sound. Loudness does have a specific unit of measurement called the *decibel;* this will be discussed in chapter 9.

Timbre, or tone quality, is partly determined by the pattern of vibration. A string, when bowed, vibrates in a particular way producing the sound of a bowed string. A plucked string has a markedly different sound. It may be vibrating at the same rate and with the same energy as the bowed string, but its manner or pattern of vibration is different. Pitch, loudness, and timbre are terms we assign to different aspects of a vibrating object. Pitch refers to rate, loudness to perceived energy, and timbre, in part, refers to the pattern of vibration.

All of the foregoing analogies have been in terms of familiar acoustic instruments, and transferring these ideas to electronic instruments is a simple matter. Electricity is a source of energy that can be specified and controlled. Through various types of circuit designs and controls, electricity can cause objects, usually speaker cones, to vibrate in specified ways. One can design a circuit to produce energy fluctuations at certain rates, amplitudes, and patterns. When these fluctuations are transmitted to a speaker cone the speaker transfers these vibrations into the air, and from that point the sound takes essentially the same path to our ear as any other sound. Once the electrically generated signals have become translated into airborne vibrations their behavior is independent of the sound source. Electronic sound is only "electronic" in terms of generation and control. The generation and control of sound on electronic and acoustic instruments have conceptual similarities—a sensitive cellist is continually concerned with how fast, how hard, and in what pattern the strings are vibrating. The musician relates to electronic instruments in precisely the same manner; he is concerned with telling the electronic circuits how fast to produce energy changes, the amount of energy to be transmitted, as well as the various shapes and patterns of energy changes produced by the electronic circuitry.

Musical Structure and Temporal Measurements

All musical processes can ultimately be defined as temporal pressure variations perceived by the ear. The mind's ear is continually making measurements and comparisons of information on multi-dimensional levels. On one level we may observe the length of a composition, movements, or phrases. Such long term measurements are usually spoken of as form. On another level we measure the durations of and intervals between individual notes and call that rhythm. On still another level we measure the number of air fronts moving past our ear in order to establish the identity of a single pitch or composite sound. On another dimension a stronger or more forceful vibration will usually be perceived as a louder sound than a weaker vibration. The parameter of timbre is indeed enigmatic and eludes precise definition. As mentioned before, timbre is related to the manner in which an object vibrates, but this is only one of several contributing factors in timbral identities. Such complications are subsequently elaborated in cited references.[1] For the present we may accept the statement that timbre is a dynamic parameter subject to an infinitude of changes or variations in time.

1. For further reading in the area of musical timbre refer to Robert Erickson's *Sound Structure in Music*, University of California Press, 1975.

Although perhaps premature at the time in terms of available technology, the theories of Karlheinz Stockhausen during the middle 1950s, merit consideration by the practitioners of electronic music, if not for all media. Stockhausen's writings detail the previously mentioned idea that long durations of time (macro-time) contain musical forms; shorter temporal variations contain phrases or motifs, while still smaller temporal divisions enter the realm of rhythm. A rhythm, if increased to about 18 times a second, begins to be perceived as a pitch (micro-time). Continuing with this same manner of thinking, a higher pitch (faster rhythm?) enters a perceptual domain providing some, but not all, information about timbre. Stockhausen's theories imply that form, phrase, rhythm, pitch, and timbre are all the workings of a single system—vibrations or variations.

> "The musical organization is carried into the vibrational structures of the sound phenomena. The sound phenomena of a composition are an integral part of this organization and are derived from the laws of structure: namely, that the texture of the material and the structure of the work should form a unity; and the microtonal and macrotonal form of the work have to be brought into a conformity that accords with the basic formal idea which every single composition has."[2]

The amount of energy or force behind any of the vibrating domains influences loudness. It is notable that this energy affects each of these perceptual domains in the same manner. We will learn that increased energy in the higher frequencies will alter the parameter of timbre; increased relative energy between 18 and about 17,000 times a second results in louder pitches; energy variations below 10 or 15 times a second affect the dynamics of rhythm (accents), phrases, and formal contrasts.

All musical instruments are dedicated to the production of variations in air pressure at various rates, with forces, and in differing patterns. A vibrating string, reed, lip, or membrane ultimately results in a sensation we hope will be of musical interest. Assuming that the listener is perceiving sound in an acoustic space we know that the air is conveying the vibrations to our ears from some vibrating source like a string, reed, lip, or membrane (such as a speaker cone as is the case with most electronic instruments).

2. Quoted by Seppo Heikinheimo in *The Electronic Music of Karlheinz Stockhausen (Studies on the Esthetical and Formal Problems of its First Phase)*. (Bryn Mawr, Penna., Acta Musicologia Fennica, Theodore Presser Co., 1972) p. 15 from *Texte zur elektronischen und instrumentalen Musik* (Volume I) by Stockhausen.

Non-Linear Perception

Most human sensory perception is non-linear. A physiological response such as hearing or sight is not directly proportional to the stimulus (sound or light) causing that response. *Non-linearity* means that equal changes in some stimulus (vibration rate, intensity, etc.) do not result in equal changes in perception (pitch, loudness, etc.).

Pitch is the result of a given rate of change or vibration of some physical object—in this context a speaker cone. A vibration of 65.4 vibrations per second, or *Hertz* (abbreviated *Hz*) registers the pitch sensation of low C. By doubling that frequency to 130.8 Hz the C an octave above will be heard. The next octave C, middle C is 261.6 Hz, or *four times* the original low C. Note that between C_2 and C_3 there is a difference of 65.4 Hz ($130.8 - 65.4 = 65.4$), but between C and middle C there is a difference of 130.8 Hz ($261.6 - 130.8 = 130.8$). Continuing up in octaves one may observe in figure 2.1 that each octave is twice as large as its lower neighboring octave when measured in Hertz. Equal changes in perception (octaves) require uneven changes in stimulus (each octave being twice as large as the previous). This type of non-linearity is called an ***exponential progression*** because pitch sounded in subsequent octaves increases by factors of 2. Pitch perception is consistently based on such an exponential progression. Note that in figure 2.2 the lower perfect 4th, C_3 to F_3, is a difference of 43.8 Hz, while the same musical interval three octaves higher is 350.4 Hz. The unit quantity of the stimulus, Hertz, increases by a constant factor of 2 every octave. To calculate what the Hertz measurement of a perfect 4th from C to F (43.8 Hz) would be four octaves higher, one would multiply that number not by four, but by two to the fourth power (2^4) or 16. Hence, scientific measurement of intervals can be carried out

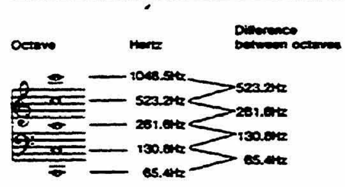

Figure 2.1. Exponential pitch relationships: Octaves

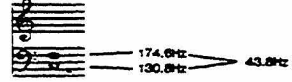

Figure 2.2. Exponential pitch relationships: Perfect 4ths

in Hertz, but in terms of our ears' response, higher intervals contain more Hertz than identical musical intervals in lower octaves.

Changes in loudness are due to perceptions of the change of physical strength or *amplitude* of vibration. The more energy contained in the air fronts moving past our ears, the louder the perceived sound. Like pitch, the perception of loudness is also non-linear. Loudness is measured in units called *decibels* (abbreviated *db*); this is the smallest unit of noticeable loudness difference the ear can detect. The decibel is usually used as a measurement of relative loudness between two events. If 1 db is assumed to be the softest possible sound, then 60 db would represent the loudness level of a normal conversation at a distance of about three feet. However, a db level of twice that figure, 120 db, is not twice that loud, but 1,000 times as loud![3] For the mathematically minded the decibel equals 20 $\log_{10}$ P1/P2. P1 and P2 are the two difference levels being compared. At this point it is only necessary to realize that the decibel is a non-linear unit of loudness measurement- perceived equal changes in loudness taking more energy at louder levels.[4]

Subjective and Objective Measurement

The perception of vibrations may be dealt with either subjectively or objectively. An objective measurement would be the observation of such vibrations against a precisely calibrated measuring device, and under every condition that same rate of vibration would always measure the same. For example, speaking of pitch in terms of Hertz is an objective measurement. A = 440 Hz is an objective statement because the reference, a period of 1 second, is not variable. When, however, these vibrations are forced through a variety of media (around corners, through walls) under a variety of conditions (different loudnesses, timbres, etc.) the *subjective* measurement, what we actually perceive and register, may not agree with the objective measurement. It is not the intent of this book to dealve into a detailed study of psycho-acoustics, but it is important for the musician to realize that there is a difference between objective and subjective measurements.[5] Objective appraisement involves measurements against a consistant norm: subjective appraisement is a perceptual measurement which can be influenced by many variables. Frequency is an objective measurement, but pitch is a subjective measurement. Frequency is objectively measured in Hertz, and pitch is subjectively measured in musical intervals such as thirds, fifths, octaves, etc., or in specific pitch references such as B♭ and C♯. Amplitude is an objective measurement of the subjective phenomenon we call loudness. Amplitude may be measured as voltage levels, and loudness may be measured in terms of decibels or traditional musical dynamics such as piano and forte. In some cases decibels may be objectively measured with various types of meters, but speaking practically, the db is a measurement of what we hear. The various conditions that alter our subjective perceptions will be discussed in situations where those variables can be put under some sort of control.

3. Some common decibel relationships to keep in mind are 6 db = 2:1, 10 db = 3:1, 20 db = 10:1, 40 db = 100:1, 60 db = 1,000:1. See Appendix II for a decibel chart.

4. Burke, A. Oscar, "The Decibel: Basics" DB5, No. 3 (March 1974) pg. 24. The reader is referred to this article for a good layman's study of the decibel.

5. For further reading in the area of psycho-acoustic musical phenomena the reader is referred to Juan G. Roederer's *Introduction to the Physics and Psychophysics of Music* (New York, Springer-Verlag), 1973.

3 Electronic Sound Sources and Their Characteristics

Logically, the production of a musical event begins with the generation of an initial sound. The performer provides certain information to the instrument, and the instrument responds by producing a characteristic and often musically raw sound. This can be demonstrated by listening to a beginning player on any instrument. The basic sound is modified by the physical properties of instrument and also by additional performance nuances supplied by the player. This process applies with equal accuracy to both electronic and acoustic instruments.

Although any sound can be modified and disguised almost beyond recognition, its initial characteristics will suggest applicable modifications in terms of the desired result. If an orchestrator or arranger wants a delicate, shimmering effect more than likely he will not begin with a tuba! A major skill required of electronic instrument composers and performers is orchestration. Obtaining the desired result is dependent on beginning with the most effective source. Professional electronic instrument programmers[1] must be aware of the physical and sonic characteristics of the basic electronic sounds before beginning to add the subtle nuances and processing called for by the producer or performer.

Voltage and Sound

As the fiddler's bow hairs force the violin string and sounding board to vibrate and cause the air pressure in that string's environment to fluctuate, electrical voltage causes the paper or metal cone of a loudspeaker to vibrate—again resulting in variations in air pressure. Electric *current* is a measurement of the flow of electric energy. *Voltage* is the force that causes the current to flow through a wire. Although voltage and current are measurements of two different electric activities they are mutually related. At this point it is not really necessary to distinguish between the two. If a speaker cone is connected to an alternating current, certain physical changes take place. When no voltage is applied to the speaker, the speaker cone is in a neutral position (fig. 3.1A). When a "positive" voltage is applied to the speaker, the cone is pushed outward (fig. 3.1B) and then, as the positive voltage decreases, returns toward its original position. As a "negative" voltage is applied to the speaker, the cone is pulled back to a point opposite the positive voltage position of the speaker (fig. 3.1C).

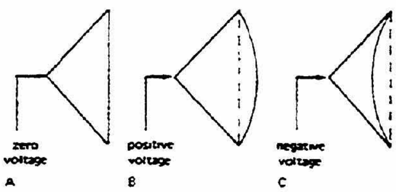

Figure 3.1. Speaker cone movement

Every time the speaker cone is moved by the alternating current—AC (positive, passing through a neutral position, negative, and again passing through a neutral position) masses of air or pressure waves are moved past our ear, producing the sensation of pitch. If the speaker cone is moved back and forth 440 times in one second, for example, we hear a sound which is commonly referred to as "tuning A." If the cone moves back and forth at a rate of 261.6 times a second, we perceive a pitch of "middle C." Each back-and-forth movement caused by the application of a positive voltage followed by a negative voltage is referred to as a "cycle," or a "Hertz." Therefore, 440 Hertz (Hz) produce "tuning A."

The volume, loudness, or amplitude of a sound is determined basically by how far the speaker cone is moved back and forth on its neutral axis, which is a result of the voltage level of the AC. If an alternating current hypothetically displaces a speaker cone 1/4 inch in each direction from its neutral position

1. A programmer is a musician responsible for "making the patch" on the instrument for a performer. People such as Mike Boddicker and Ian Underwood are highly respected programmers and are successful due to their ability to work quickly and efficiently in the studio.

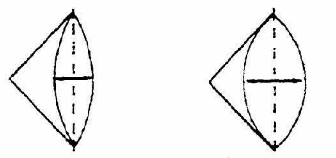

Figure 3.2. Amplitude of sound

261.6 times a second, the ear will perceive "middle C" at a certain loudness level. If the speaker is displaced 1/2 (2/4) inch from its neutral position at the same rate of frequency, the ear will perceive the *same* pitch but at a louder volume or, in objective terms, at a greater amplitude (see fig. 3.2). It should be noted that amplitude does have certain effects on pitch perception. For frequencies about 1k Hz[2] there is a small but perceptible correlation between pitch and loudness. Careful listening will show that above 1k Hz the pitch will rise slightly as the loudness of that same frequency increases.[3] And the inverse is true in that the pitches in differing registers at the same amplitude (an objective measurement!) will be perceived at different loudnesses. For example, high C^6 (1046.4 Hz) at an amplitude perceived as "piano," when transposed down four octaves to C_2 (65.4 Hz) at the same amplitude is barely audible. Besides being a good example of the difference between subjective and objective measurement, this also illustrates the concept of dependence of various musical parameters on each other.[4]

Characteristics of frequency and amplitude are represented graphically in figure 3.3. The line of zero voltage represents the speaker cone in the neutral position, or no movement of air. The horizontal direction of the line represents the passage of time. The plotted curve on either side of the zero-voltage line represents the back-and-forth movement of the speaker cone, or positive and negative voltage, which in relation to the time each cycle takes represents frequency or pitch. The height of each cycle gives an indication of amplitude or loudness. Figure 3.3A is the same frequency but greater amplitude than figure 3.3B; figure 3.3C is the same amplitude but lower frequency than figure 3.3B.

2. "k" is an abbreviation of the term "kilo," meaning 1,000. Therefore 1k Hz means 1,000 Hz.

3. For information on this subject the reader is referred to the study by S.S. Stevens, "The Attributes of Tone," *Procedures of the U.S. Academy of Science*, 20:54, 1934.

4. Based on information given by Roederer, *op. cit.*

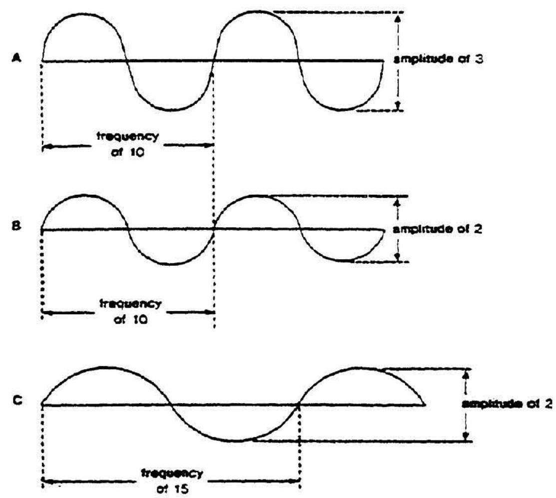

Figure 3.3. Amplitude-frequency comparisons

The Basic Oscillator

When the musician wishes to produce a specified pitch he sets an "oscillator" to generate a voltage oscillating at the desired frequency. Oscillators are often calibrated with a dial or lever that corresponds to the desired frequency. Often there is no calibration and tuning is left to the ear. The dial is usually referred to as a "pot," which is an abbreviation for "potentiometer," a resistance device that in this instance controls the frequency of the oscillator or rate of vibration. There may be a second pot to control the amplitude of the signal, but in many cases such an amplitude control is external to the oscillator. This will be discussed later. At this point, it will suffice to know that an oscillator is a frequency-producing device that has the capability of producing any desired *single* frequency.

Our range of hearing perceives only those frequencies between 18 Hz and 22k Hz. There are many differing opinions about the actual audio range. These different statements of audio perception range from a low of 16 to 30 Hz and a high of 18k Hz to 30k Hz.) As we shall see later, however, frequencies far below and above the audio range are necessary to the production of many types of sound. Oscillators that specialize in frequencies below our hearing range are known as "subaudio oscillators" or "modulation oscillators" or "low frequency oscillators" (LFO's) (see page 13) and generate frequencies as low as one cycle every minute and lower. Oscillators specializing in frequencies immediately above the audio range are referred to as "ultrasonic oscillators." The three types of oscillators generally overlap in frequency range. The ideal oscillator for use in electronic music is one that will cover all three frequency ranges with the same degree of accuracy.

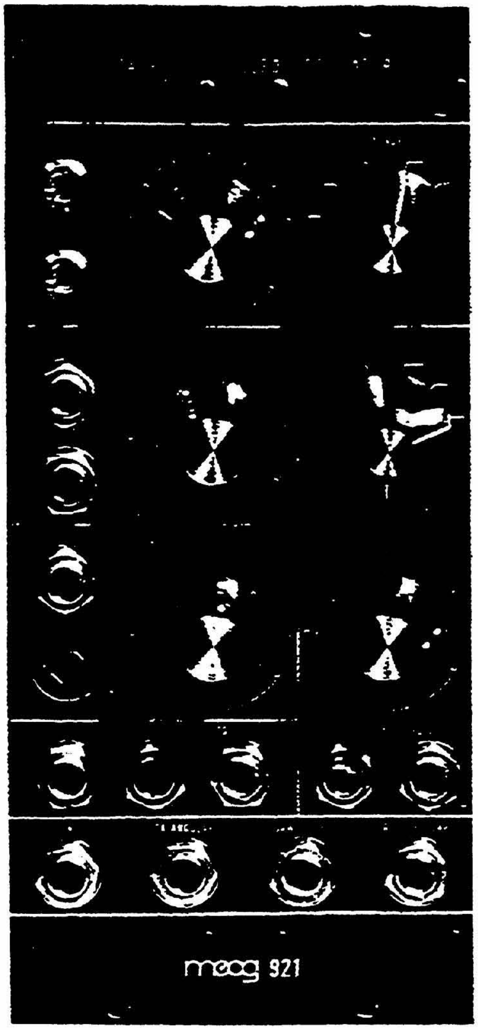

Figure 3.4A. Moog 921 Oscillator (Courtesy of Robt. A. Moog, Moog Music. Used by permission.)

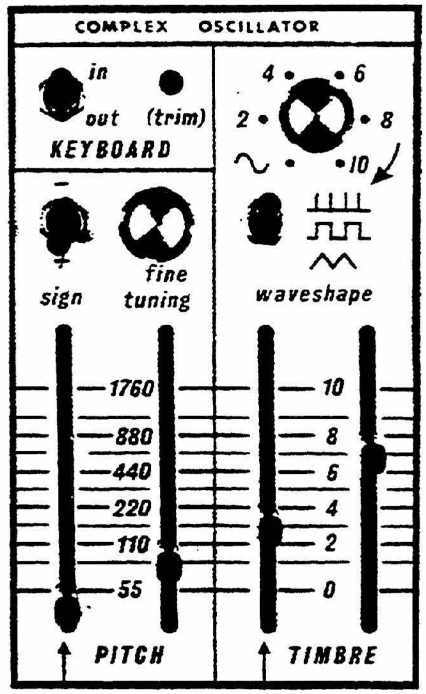

Figure 3.4B. Buchla 208 Oscillator

Figure 3.4A is the front panel of the Moog 921 oscillator with *rotary* pots and 3.4B is the Buchla 208 oscillator with *linear* or *slide* pots. Some performers prefer the slide pots as they give a more graphic indication of the produced pitches—the higher the knob the higher the pitch; rotary pots have the advantage of higher "setability."

With the first and second generation electronic music oscillators there was often a trade-off between sweep range and stability. An oscillator with a single continuous range from 5 to 20k Hz might suffer from lack of accuracy and drift (uncontrollable pitch variations). To minimize this problem some oscillators are designed to have their total range divided into octaves by a calibrated switch, such as the Moog 921 in figure 3.4A. In this case, the octaves are indicated in "feet," taking a cue from standard organ terminology. The exact pitch within each octave can then be manually determined by the *frequency control*. This particular oscillator has the additional capability of serving as a sub-audio oscillator by setting the "coarse range" switch to "sub-audio." "Coarse-range" refers to a very broad operational range. In the case of the Moog 921 the two course ranges available are .01 Hz (one cycle every 100 seconds) to 400 Hz and 1 Hz to 40k Hz. Other oscillators may have ranges calibrated in Hertz. The Electro-Comp EML-200 has six switchable ranges: .01 Hz, .1 Hz, 1 Hz, 10 Hz, 100 Hz and 1k Hz. The Buchla 258 oscillator is a single sweep oscillator with a range from about 2 Hz to 20k Hz (this range is extended through the application of external controls). Fine tuning may be accomplished by means of a small pot known as a *trimmer*. The Synthi VCS-3 provides a single sweep oscillator with a range from 1 Hz to 10k Hz, calibrated with numbers from 1 to 10. In this case fine tuning is done by means of a ten-turn rotary pot. This means that the pot can be completely rotated 10 times—one complete rotation covering only 1/10 of its total range. This is advantageous in the sense that it provides more manual precision when trying to pin-point exact pitches. One possible disadvantage is that the ten-turn format takes slightly longer to *offset*[5] manually to a different register.

While on the subject of pitch precision a word about oscillator drift may be in order. In the "Ice Age" of electronic music systems (the early 1960s) there

5. *Offset* is a term referring to the establishment of the initial state or reference of a particular parameter. This will be covered in detail in chapter 5.

was a great deal of criticism of voltage controlled oscillators for not holding a set pitch accurately for extended periods of time. Formerly musicians either used a different oscillator or composed around the problem. In newer instruments drift has been minimized to an almost insignificant degree. It is my own opinion that *electronic musical instruments* are still *musical instruments*, and any musical instrument requires tuning. One should not really expect an oscillator to hold its reference pitch in a performing situation to any greater degree than one would expect a violin, flute, or trumpet to hold a pitch in the same situation (although many of the available electronic instruments do have great stability and will stay exactly in tune for long periods of time). At the same time we realize that with any instrument, including electronic ones, pitch will not be stable until it is sufficiently warmed up. Leave ample time for the instrument to be turned on and left in the environment in which it will be used. Some studios make a practice of leaving the instruments on continually. Unless there is tube circuitry in the instrument this should not cause any problems with over-heating and the practice will add to the stability of the system.

Basic Waveshape and Spectra

Before exploring some specific oscillator formats it is necessary to learn the relationship between various patterns of generated audio voltages or *waveshapes*, sound spectrum, and the aural experience. Manufacturers have come to some agreement as to the basic "orchestra" of commercial electronic music instruments, and the waveshapes to be discussed here are common to most instruments. If we think of *waveshape* as the graphic representation of the rise and fall of voltage from zero to a maximum positive and/or negative and back again, it is possible to identify basic electronically generated sounds by their shape. There is a direct relationship between the visual and sonic quality of a sound. Nearly all sounds exhibit a *spectrum* or a collection of many individual frequencies which combine to make a single aural event. In striking a gong it is possible, by careful listening, to isolate aurally the multitude of pitches which make up the total complex sound of this instrument. Most instruments produce sounds which consist of many combined frequencies called *overtones* or *partials*.

Gongs, bells and other percussive instruments display unusual spectra where apparently there is no consistent relationship between the frequency components or partials. Most strings, brasses, reeds, and certain electronically generated sounds, however, display a predictable spectrum based on a rather simple concept. Any vibrating source is capable of the excitation of generation of additional frequencies. The standard classroom method of observing this is to silently depress middle C^4 on the piano and strike C^3 an octave below. One will hear middle C ring out as it has been forced into vibration by the lower octave C^3. This type of forced vibrtion is called *sympathetic vibration* and demonstrates that one vibrating system has the potential of generating other vibrations.

It is an observed fact that nature accomplishes things in the easiest and most efficient manner. The easiest way we have of expressing simple relationships is in terms of integers, or whole numbers (1, 2, 3, etc.) The most common type of excitation in vibrating systems also occurs at whole-number intervals. A low C_2 of 65.4 Hz is capable of generating twice that frequency, 130.8 Hz (the octave C_3 or 2×65.4 Hz), the multiplier "2" being the first integer above 1 (the unison). The same vibration of 65.4 Hz is also capable of generating 196.2 Hz (3×65.4), which is the pitch G^3, a perfect 12th above the original frequency. The process of multiplying a basic frequency by whole numbers could continue *ad infinitum*. Most sounds made by what we call "traditional" musical instruments exhibit a spectrum containing frequencies related by whole numbers. This type of spectrum is called the *harmonic overtone series* and is illustrated in part in figure 3.5. The lowest frequency of this spectrum is called the *fundamental* and is the generator of the series—each *overtone* being an integral or whole number multiples of the fundamental. The overtones are, in this case, *harmonic*, referring to the fact that each is an integral multiple of a single fundamental frequency, forming a consistent system of relationships one with another. The term "harmonic," for my purposes, does not refer to the obvious progression of whole numbers, but rather to the fact that there is a consistent relationship between the numbers, irrespective of the nature of the consistency or simplicity. They are "in harmony" with each other due to a consistent relationship. By this definition there can be other harmonic relationships built on systems other than whole number multiples; this idea will be further explored in chapter 8 (see page 114). In the meantime we will retain the tradition of "harmonic" referring to whole number relationships.

There is often confusion as to the precise definition of the terms *overtone*, *partial* and *harmonic*. For the purposes of this text *overtone* will refer to any frequency component in a spectrum *above* a given fundamental. If the overtone bears an integral relationship to the fundamental it will be called a *harmonic overtone*, or just a *harmonic*. There is also occasional confusion about the term *harmonic*, and the confusion arises from differentiation between *harmonic* and *harmonic number*. If one uses or assumes the term *harmonic number*, the series begins with the fundamental as harmonic #1, the octave then being harmonic #2 and so on. On the other hand, the term *1st*

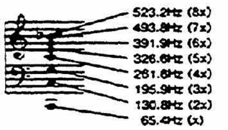

Figure 3.5. Harmonic series

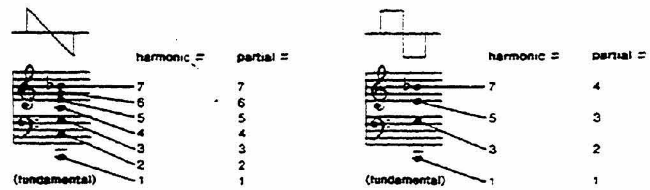

Figure 3.6. Harmonics vs. partials

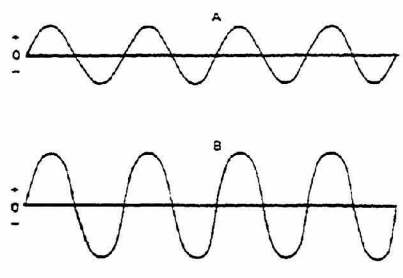

Figure 3.7. Sine waves

harmonic usually refers to the first integral multiple above the fundamental or the octave. The *2nd harmonic* is the second integral multiple (the perfect 12th) above the fundamental, etc. This text will use the former practice of harmonic numbers, the fundamental being 1, the octave being harmonic #2, the 12th being harmonic #3, and so on. This is perhaps the more logical, since the harmonic number then agrees with its integral multiple (harmonic #1 is fundamental times 1; harmonic #2 is the fundamental × 2, harmonic #3 is the fundamental × 3, etc.). The term *partial* refers to specific spectral content irrespective of harmonic or non-harmonic relationships. And as will be seen, certain sounds contain only selected overtones. A clarinet, for example, has a spectrum containing only odd-numbered harmonics (the fundamental, 3rd, 5th, 7th, etc.). In this case, the fundamental is the first partial, and due to the lack of a scoend harmonic, the 3rd harmonic is actually the second partial, the 5th is the third partial and so on. This garble of terms is clarified by figure 3.6.

To a certain extent the overtone content of a sound, be it harmonic or non-harmonic, provides us with its aural signature or timbre. There are other factors which contribute significantly to timbral perception. The loudness of a sound, the manner in which the sound is activated and the manner in which it stops vibrating, the relative amplitude of the overtones, etc., all play an important part in timbral recognition and these factors will be explained as their control techniques are introduced.

Perceptually, or perhaps even aesthetically the most noncomplex type of sound is the *sine wave*. This particular waveshape contains no overtones. The closest sound to a pure sine wave in a symphony orchestra is that of a flute. As is shown in figure 3.7 the voltage is in a particular state of motion. Starting at zero, it gradually increases to maximum positive, then decays through zero to maximum negative, then returns to the original starting place.

A sine wave exhibits this same pattern independently of frequency or amplitude. Figure 3.7B shows the same frequency as figure 3.7A but with an increased amplitude. The device that electronically produces sine waves is referred to as a sine-wave oscillator. Sine waves, like any other waveshapes, can exist in any frequency range. Due to distortions caused by various components of the oscillator and/or distortions in the reproduction equipment, however, a precise sine wave is very difficult to generate, and the composer usually has to settle for something less. It is the observation of this writer that a pure sine wave used as an audio signal is not an especially monumental musical sound and a bit of harmonic distortion (very small traces of additional harmonic content) may add to the incipient musicallity. Various manufacturers publish the amount of harmonic distortion of their sine wave oscillators along with other instrument specifications. An imperfect waveshape used as an audio signal can be accepted, and may often prove to be more musically interesting than the textbook model.

Figure 3.8 is an oscilloscopic (graphic) representation of a *sawtooth* or *ramp* wave. In contrast to the pure sine wave, a sawtooth wave contains all harmonic overtones of the fundamental frequency. These harmonic overtones have relative amplitudes that decrease exponentially as they exist higher up in the harmonic series. A sawtooth oscillator will produce this basic waveshape in any frequency range. Note that figure 3.8A is symmetrically inverse of 3.8B and is often referred to as an inverted sawtooth. Both are legitimate sawtooth waves and, in spite of the reverse position of the leading edge, will sound the same. The sawtooth wave is very bright and piercing, somewhat like the sound of an oboe or violin.

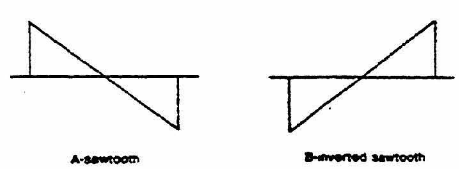

Figure 3.8. Sawtooth waves

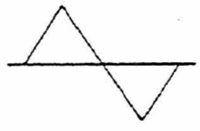

Figure 3.9. Triangle wave

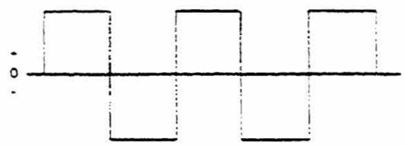

Figure 3.10. Pulse or rectangular (square) wave

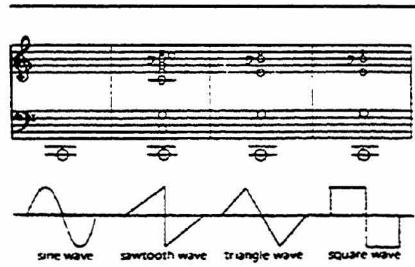

Figure 3.11. The four basic waveshapes and their harmonic content (up to the 9th multiple)

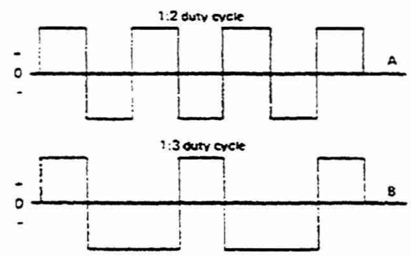

Figure 3.12. Pulse-wave duty cycles

A third basic waveshape is the *triangle* or *delta wave* (fig. 3.9). This waveshape consists of a fundamental frequency and all of the odd-number harmonics, with amplitudes falling off in ratios of 1/9, 1/25, 1/49, etc. By using a classic studio technique of "additive synthesis," it is possible to construct a triangle wave (or any other waveshape) by using a specific collection of different sine waves. Starting with a fundamental of C (65.4 Hz) with a hypothetical amplitude of x, a second sine wave tuned to 65.4 Hz times 3 (for the second overtone) is added (196.2 Hz) with an ampiltude of 1/9 X. Then a third sine wave which is the fifth multiple of the fundamental (327 Hz) is added with an amplitude of 1/25 X. The composer continues this process until all of the necessary harmonics with the correct amplitudes are present. If the amplitudes of the harmonics are thought of in ratios, it is easy to understand how the perceived harmonic content of any given wave is dependent on the amplitude of the fundamental.

Perhaps the waveshape that is most commonly used by the composer is the *pulse* or *rectangular* wave. As shown in figure 3.10, the positive and negative voltages of a pulse wave are never in a transient state. They are instantaneously positive, then instantaneously negative, whereas the sine, sawtooth and triangle waves all exhibit various types of gradual rise and fall between positive and/or negative states. If a pulse generator is programmed to oscillate anywhere below 7 to 10 Hz, the speaker cone can be heard snapping back and forth.

Figure 3.10 shows a particular type of pulse wave known as a *square* wave. A square wave is related to a triangle wave in that it also contains odd-numbered harmonics, but with quite different amplitude relationships. The amplitude relationships of the harmonics of a square wave are 1/3, 1/5, 1/7, 1/9, etc. A clarinet in the chalumeau register produces a sound that is very close to that of a square wave. Figure 3.11 illustrates in standard musical notation the harmonic content of the four basic waveshapes. The relative amplitudes are indicated by the size of the note. Note that there are no even numbered harmonics in any of the symmetrical waveforms.

Due to the many uses of the square wave, it is thought of as a basic waveshape, even though it is a variety of a pulse wave. There are many other types of pulse waves, and they are defined by what is known as their "duty cycle." The duty cycle of a pulse wave is the positive or "on" portion of the entire cycle. Figure 3.12 shows the duty cycle of two different pulse waves.

The duty cycle determines the harmonic content of the waveshape. In the case of the square wave, the duty cycle is one-half of the total wave, or a ratio of 1:2 (as in fig. 3.12A). Expressed as a fraction, the duty cycle of a square wave is one-half of the total wave, and it is the denominator of this fraction that tells us its harmonic content. The denominator "2" indicates that every second harmonic is absent from its harmonic overtone series, confirming the earlier statement that the square wave consists only of a fundamental and the odd-numbered harmonics. A pulse wave with a duty cycle of 1:3 (as in fig. 3.12B) contains the fundamental and the first, second, fourth, fifth, seventh, eighth, tenth, etc., harmonics. In other words, the denominator is an indicator of what order harmonics are absent from the spectrum. Oscillators designed for use in electronic music systems may have controls or pots marked *pulse width, duty cycle, symmetry* or *waveform adjustment*. Pulse width and duty cycle refer specifically to pulse waves and may vary the "on" portion of the wave from 10% to 90% or more of the total cycle.

Waveform adjustment or symmetry are variations which are possible with any waveshape. For example the Synthi VCS-3 provides three oscillators with a

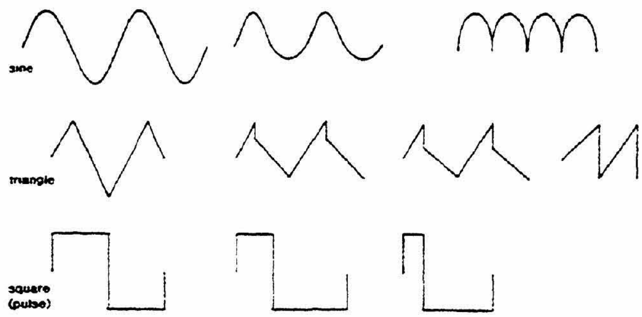

Figure 3.13. Waveshape symmetry variation based on Synthi VCS-3 instruments

variety of waveshapes having symmetry control on each. Figure 3.13 illustrates some of these waveshapes as they appear with the symmetry control in different positions. Each of these variations produces a slightly different timbre, except in the case of symmetrical inversion (as was the case with the inverted sawtooth wave in figure 3.8) Note that, with the sine wave, there is a symmetry position which places all of its voltage above the 0 volt reference in the shape of two crests.

Waveshapers and *wave multipliers* can be used to transform triangle waves into other waveforms. The resulting waveform may be another classic waveform such as a sign or squarewave, or it may be a completely new class of signal impossible to describe in terms of standard waveshapes. Such modules are really signal processing devices and will be discussed later in the text.

Additive Synthesis

Composers such as Ravel and Hindemith, and more contemporary composers such as Ligeti and Kagel, have been very concerned with the mixing of various instruments to produce new orchestral timbres. One of the classic examples of this additive approach to orchestration is in Ravel's Bolero. Beginning in measure 149, Ravel combines a horn, celeste, and two piccolos to produce a sound unlike any of the individual instruments used. Examination of the score discloses that Ravel's apparent tri-tonality is actually a reinforcement of the harmonic series of each pitch in the melody. The horn plays the fundamental while the celeste plays the first and third harmonics and the piccolos provide the second and fourth harmonics. (See figure 3.14.) A more recent approach to this type of composition is Maricio Kagel's *Music for Renaissance Instruments* (Deutsche Grammophone Records, no. 137 006), in which the composer is concerned with constructing various types of non-harmonic sounds.

This same basic method is applied to electronic music in classical techniques of timbre construction. Suppose, for example, that a composer wished to synthesize the spectrum of a square wave. Since a square wave's spectrum is virtually infinite, one hypothetically would have to have an infinite number of sine wave oscillators, one for each frequency present in the square wave's spectrum. This is impractical, for the obvious reason that there is a limit on available oscillators. It is really an academic problem, since beyond the third octave above the fundamental manual tuning becomes quite difficult.[6] For sake of illustration, we will limit this construction to the first five partials present in the square wave's spectrum. After arbitrarily deciding on a fundamental of low F_3 (174.6 Hz), a sine wave, one would then tune each remaining sine-wave oscillator to the other odd-numbered harmonics: C^5, A^5, $E\flat^6$, G^6. Since all of these frequency components must be perceived as a single sonic object, they must be combined into a single signal. This is accomplished by means of an audio *mixer*. Mixers and associated techniques are covered in detail in chapter 11. Here, it will suffice to state that their function is to combine two or more frequencies or signals into a single signal in such a manner that minimal distortion of the original signals occurs. A mixer also usually provides means for controlling the amplitude of each input signal by means of a volume control, pot, or attenuator. Therefore, the amplitude specifications for the harmonics of a square wave can be accommodated (see page 18). Figure 3.15A illustrates the physical set-up or "patch" for this process; figure 3.15B shows the waveshape transformation from sine toward square as each frequency component is added in its correct proportion.

This process is generally referred to as *Additive Synthesis or Fourier Synthesis*. Briefly, the Fourier Synthesis states that any sonic object can be created (more specifically re-created) by subdividing its instantaneous spectrum into individual sine wave frequency components, then combining the correct number of sine waves with the proper amplitude relationships to recreate the original sound. Theoretically any waveshape may be recreated through this technique. Again, this seems to be a bit academic, since the basic waveforms are already available from various oscillators and additive waveform synthesis techniques may be put to more productive use in creating some new waveforms. From this viewpoint all that can be offered in terms of suggested technique is to be aware of and experiment with various amplitude relationships among the partials. If one wishes to experiment with harmonic frequency relationships read ahead in this chapter about sync techniques (page 20).

Although additive techniques are powerful tools in the electronic media, precise Fourier Synthesis techniques are for the most part impractical on commer-

6. Refer to page 20 for sync techniques related to this type of tuning.
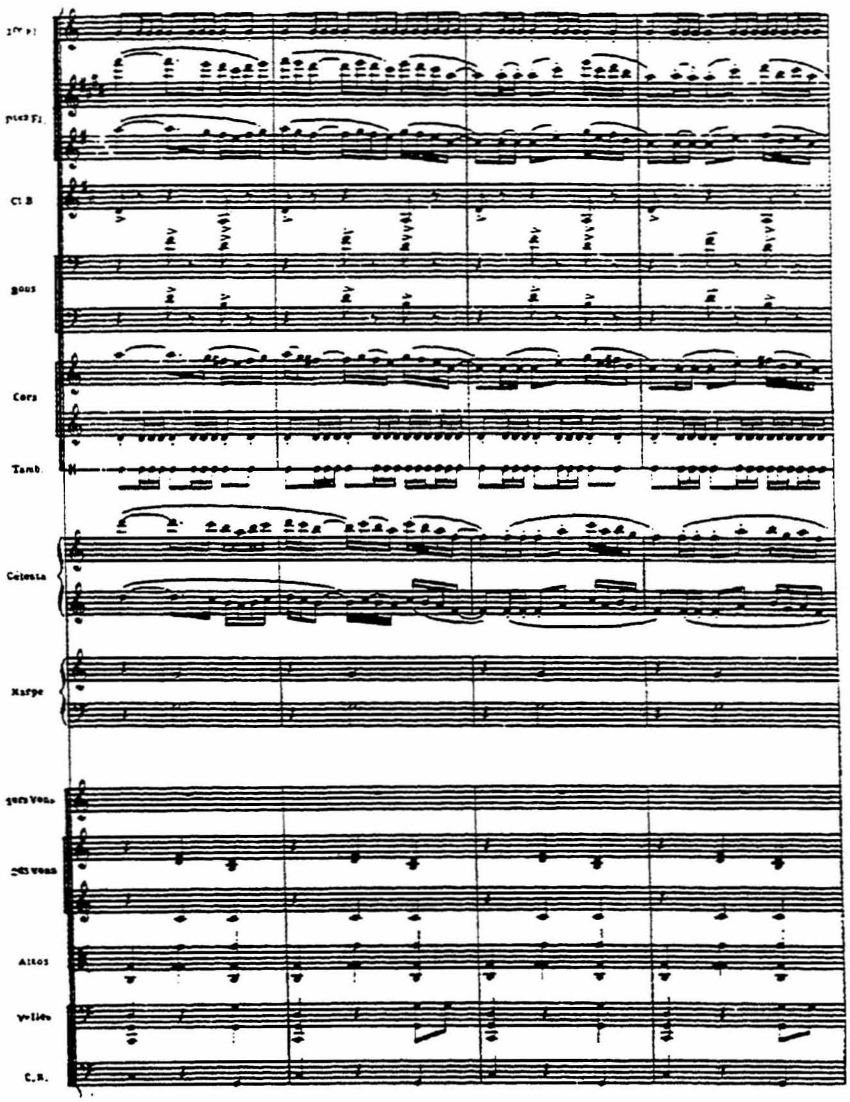
Figure 3.14. From the score of *Bolero* by Maurice Ravel. (Reproduced with the authorization of Durand & Cie, Editeurs-proprietaires, Paris.)

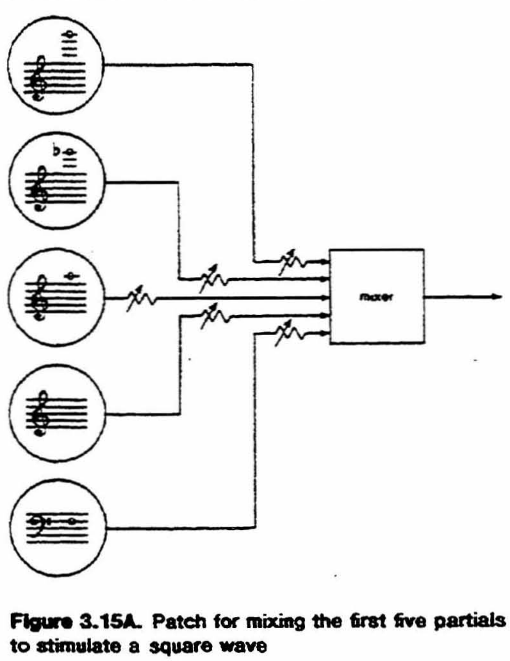

Figure 3.15A. Patch for mixing the first five partials to stimulate a square wave

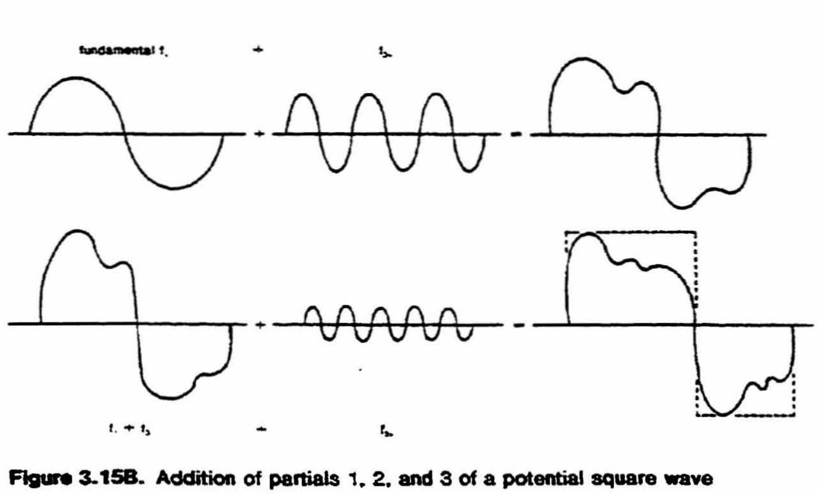

Figure 3.15B. Addition of partials 1, 2, and 3 of a potential square wave

cial instruments due to the numbered variables involved and the amount of instrumentation required.[7] Some writers have pointed out that the discovery of the Fourier series qualifies the meaning of the word "frequency" in reference to a complex wave shape. When speaking of the frequency of a sawtooth wave being 440 Hz we are really referring only to the fundamental frequency. Each of the harmonic overtones, if viewed as sine wave components, also has its own frequency. However, the sawtooth wave or any other harmonic waveform is perceived as a single identity. Integrally related overtones reinforce the perceived fundamental, and it can be assumed that the term "frequency" refers to the perceived fundamental.[8]

Oscillator Formats

Although industry has reached some agreement as to what basic waveshapes are to be made available, the actual format of the oscillator varies a great deal. The simplest is a single oscillator with one available waveshape. Most oscillators make use of *waveshaping circuits* which enable an initial waveshape (usually a sawtooth) to be converted to several other waveshapes simultaneously. Figure 3.16 shows the front panel of the Eu 2200 oscillator. The four basic waveshape are independently available *unattenuated* (at full amplitude) at the outputs marked "Full Level Outputs." At the same time each of the four waveshapes may be mixed in any amplitude proportion by means of the front panel pots, and the mixed output is available as indicated.

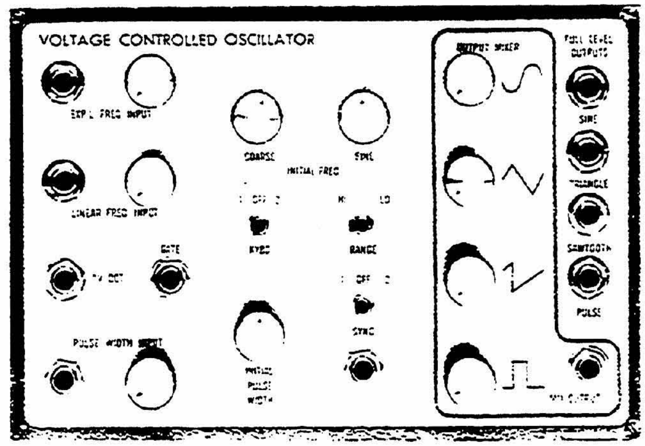

Figure 3.16. Eu Oscillator 2200 (Courtesy Eu Systems, Inc. Used by permission.)

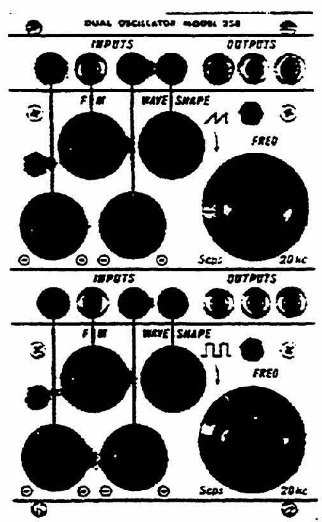

Figure 3.17. Buchla Series 258 Oscillator

The Buchla Series 258 oscillator takes a different approach (figure 3.17). First note that the chassis or *module* contains two oscillators, each with independent controls. Each oscillator has three outputs connected in *parallel*, meaning that the same signal appears at each of the three outputs. The top oscillator in this dual package provides two basic waveshapes—sine and sawtooth. The waveshape pot essentially establishes a mix of these two waveshapes: a certain amount of sinewave oscillation mixed with a certain amount of sawtooth wave oscillation. This is not to be confused with the gradual introduction of the various harmonics as in a Fourier build-up. It is merely a mix that selects proportionately between two waveshapes. At the 7:00 position (far left) the output is a sinewave, and at the 5:00 position the output is a sawtooth wave.[9] The waveshape pot may then be set anywhere between these two extremes. The bottom oscillator in this package has the same format except that the two waveshapes are sine and square.

The Buchla 208 oscillator (refer to fig. 3.4B) has three waveshaping controls. The rotary *waveshape pot* provides for transitions or mixes between sine and either pulse[10], square, or triangle as selected by the *waveshape switch*. The linear *timbre pot* provides further waveshaping possibilities, generating a continum

7. The interested reader may refer to some common Fourier spectra in "Sound, Electronics and Hearing" by A. Wayne Slawson in *The Development and Practice of Electronic Music*, Appleton and Perera, eds., (Englewood Cliffs, N.J., Prentice-Hall, Inc), 1975 p. 38.

8. Some recent research postulates that the harmonic overtone series does not reinforce the fundamental in the way we originally thought. The interested reader may wish to refer to P. Boomsliter and W. Creel, "The Long Pattern Hypothesis in Harmony and Hearing," *Journal of Music* Theory 5, No. 2 (1961): 95 2-30.

9. It might be noted that this is not an academic sawtooth waveshape, rather what Mr. Buchla calls an "augmented sawtooth." The harmonic coefficients are similar to those of a sawtooth, but of greater intensity; similarly for Buchla's square wave. Hence, oscilloscopic display of these waveforms will not show a true sawtooth or square wave image.

10. Sometimes called a *spike*, this waveshape has very strong harmonics and may be thought of as a pulse wave with a very narrow duty cycle.

of harmonic intensity by gradually introducing and emphasizing lower ordered harmonics as the pot is raised. This provides a rich set of timbres not associated with normal classic waveshapes.

"Synchronization"[11]

The construction of timbres and orchestration of voices through additive techniques often requires very precise tuning. Function generators provide simultaneous waveshapes which are referenced to the same frequency. Other additive techniques often require that two or more oscillators maintain a perfect harmonic relationship and retain that relationship under a variety of performance conditions. *Synchronization* of two or more oscillators means that they will maintain a consistent and pre-determined intervallic relationship under most control situations (the interval, of course, may be a unison). Although the most interesting musical applications of synchronization, or *sync,* cannot be explored until certain control processes are put into practice, the basic concept must be understood here as it has a direct affect on initial experiments with an oscillator. Let us imagine a situation in which two oscillators are producing frequencies of 432.6 Hz and 440 Hz — a quarter-tone out-of-tune. By synching the first oscillator to the second the lower frequency will be pulled up to exactly match the frequency of the first oscillator. This synchronous relationship may be established in several ways, according to the design of the oscillator. The popular ARP Odyssey provides the performer with two audio oscillators, the second of which has a "*sync switch*" which allows it to be brought into perfect 'tune' with the first. In this case the first oscillator is called the *master* and the second is called the *slave.* The master provides the model frequency to which the slave must adjust. Note that in most cases the master oscillator is a higher frequency than the slave and the slave is pulled *up* to match the frequency of the master. In this case the sync function is "hard-wired" between the two oscillators and no external patching is required.

The Eu 2200 oscillator has access to two synch connections which allows synchronization of any oscillators in the system. One set of oscillators comprising a voice may be synched together on one bus and another voice (set of oscillators) may be synched on the second bus. The following excerpt from the *Eu Owner's Manual* explains this process and also provides some other relevant information on synchronization processes.

> "The sync switch allows the VCO (osciliator) to be connected to one of the two sync busses running throughout the machine. Oscillators which are connected to the same sync bus and all somewhat less than a semitone apart in pitch will be pulled, or 'synched' to precisely the same frequency (equal to the highest frequency among them). In addition, an oscillator within a semitone of any harmonic of another oscillator will be pulled up if its frequency is lower than the harmonic, or will pull up the other if higher than the harmonic. Synching is essential when slow beating between oscillators is unwanted. If this so-called 'choral effect' is desired the sync can be turned off. Synching is accomplished by the use of sync pulses; when the sawtooth of an oscillator falls, a sync pulse is issued on any engaged sync bus. Thus, with all oscillators both issuing and observing each other's sync pulses, all are pulled to the rate of the fastest. This is known as 'soft' sync, since the slower oscillator will only discharge its sawtooth if it was already close to doing so anyway. 'Hard' sync, used for example in the ARP Odyssey, causes the sawtooth of a slave oscillator to discharge whenever the master oscillator does. This is equivalent to soft sync when the slave is lower in frequency than the master, but results in harmonic sidebands[12] and consequent timbral changes when the slave is higher than the master. This may be either interesting or annoying. In any case, hard sync is incapable of synching to harmonics, as can be seen in the drawing below, which describes the operation of both types of sync."[13]

11. Synchronization is a complicated process which in some cases is irrelevant to initial chapters of an electronic music text. However, it does have a great deal to do with tuning procedures and failure to deal with it, at least in part may cause some problems for the beginning student. If your available instruments have a switch marked "sync," "synch," "capture," "lock" or something of the such this section will do you some good. If not, perhaps you might wish to skip this section unless you are just interested. Some specific performance techniques dealing with sync are covered on page 119.

12. A *sideband* is an additional frequency produced by certain modifications of a signal. The term is usually associated with various types of modulations (see page 112).

13. From the manuscript version of *Eu Owner's Manual* by Ken Provost, pages unnumbered.

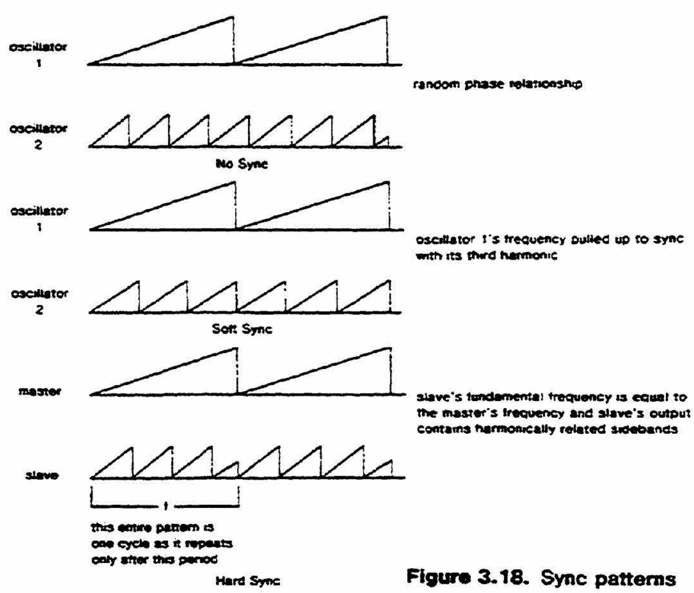

Figure 3.18. Sync patterns

It is not the purpose of this text to give a detailed description of every instrument. A glance at the front panel of any oscillator will usually reveal its format; and specific questions are usually answered in the owner's manual or spec sheet. This brief exposure to oscillators and some common formats should provide the reader with enough information to approach any oscillator with at least some meaningful questions, and may also serve as a guide for some applications of whatever format oscillator is available at the time.

White Sound

The last electronic sound (as differentiated from many other sounds available through transducers such as microphones, prerecorded tapes and discs, etc.) to be considered is white sound, or white noise (also sometimes referred to as Gaussian or thermal noise). Perhaps the most descriptive term is "white sound." Analogous to a color wheel that produces the color white as the wheel is rapidly rotated, white sound is a mixture of all the audible frequencies at random instantaneous amplitudes. Therefore, the term "white" is preferred over "Gaussian"—and the present writer prefers the use of "sound" because of the negative implications of the term "noise." White sound is heard as a hiss or as the sound of a jet engine. White sound is defined as having equal energy *per unit frequency*. This means that there is the same amount of energy between 500 Hz and 501 Hz as there is between 1500 Hz and 1501 Hz. Equal energy per unit frequency means that the noise is spectrally flat. Another type of sound common to most electronic music instruments is "pink sound." Just as with white sound, pink sound contains all the frequencies of the audio spectrum, but its energy distribution or amplitude curve is different. Pink sound contains equal energy *per octave* and is often represented as $\frac{1}{f}$ and referred to as being musically flat. It may be obvious to the reader that the term 'pink sound' is a logical color analogy as it refers to the lower end of the light spectrum; in terms of perception pink sound simply has more bass or rumble (see figure 3.19). Taking a cue from these color analogies one could easily construct color representations for any number of noise bands. For example, boosting the higher end of the spectrum may produce what one could call blue or azure sound, while a spectrum with a boosted mid-range might even be green! These terms are by no means representative of spectral standards but may serve as convenient terminology for describing different types or bands of sound.

Electronic instruments provide noise coloration in various ways. The Synthi VCS-3 instruments control noise spectra by means of a pot marked "colour" with

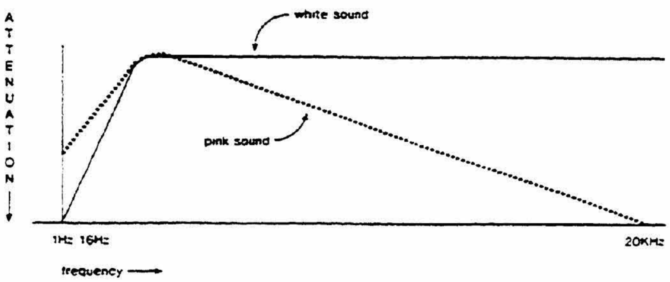

Figure 3.19. White and pink sound

the far left and right positions appropriately marked "low" and "high," and the middle straight up position assuming to be spectrally flat white sound. The Buchla Source of Uncertainty Model 265, among other things, provides three independent noise outputs. The output labeled "HI" is what has been defined as white sound. The middle unmarked output provides pink sound and the output labeled "LOW" is a type of noise which is the musical inverse of the frequency distribution found in white sound. As explained, white sound has equal energy per unit frequency, while pink sound has equal energy per octave. If the white sound spectrum is measured in octaves one will see that there is actually an increase of 3 db per octave. Buchla's noise resources establish musically flat pink sound as the norm with "HI" having a 3 db increase per octave and "LOW" having a 3 db decrease per octave. Some manufacturers refer to white sound, pink sound, etc., simply as random signal generators (such as the Moog 903A Random Signal Generator). The term 'random' is used because the amplitudes of the various frequencies at any given instant are random and must be measured over a certain time period in order to calculate an average measurement. In other cases the term 'random noise' refers to extremely low random frequencies (around 15 Hz and lower); it is not audible but rather is used as a control for random musical events (see page 83).

Thus far, only the basic types of sound *sources* and some typical formats have been discussed. It is essential that the reader understand how sound can be thought of as AC voltage, and that these voltages can be shown graphically on an oscilloscope (as they are represented in the various figures used in this book). Since the scope of this writing does not permit the discussion of *every* type of sound available to the composer, we have given the four basic waveshapes—sine, sawtooth, triangle, and pulse—and the concept of white sound. An understanding of these is all that is needed for a basic understanding of electronic music system operation.

4 Basic Signal Processing: Amplifiers and Filters

It is now time to return to music as set of dynamics—not merely dynamics in terms of loudness, but rather a more general view of simultaneous variability of co-existing parameters. Most musical events involve fluctuation, on many different levels of frequency, amplitude, and timbre. Other parameters such as space, rhythm, etc., can really be conceived of in terms of these basic three parameters and will be discussed as various forms of control are introduced. Composition and performance with electronic instruments demand that one make decisions and enforce controls (which may range from totally determinant or completely random) on these parameters. Failure to do so, at least in the initial stages of learning, can lead to frustrations, the most serious of which is the dread of every electronic music novice, silence! As one will discover, the production and control of electronic sound is usually an evolutionary process. One module generates the sound, one module imposes controls on frequency, another controls amplitude, still another controls spectral content, etc. Failure to understand any one of these generation and control processes in the chain will ultimately result in a discrepancy between the original musical concept and the final musical result.

The shaping of musical events involves various processes dealing initially with frequency, amplitude, and timbre. The realm of frequency variation and waveform should be basically understood by this point. Before embarking on a study of precise control procedures one should understand the basic processes of amplitude and timbral variation in terms of voltage and waveform variation. An electronic circuit operates only in terms of voltages (shapes and amplitudes). The musician must be able to think in these same terms to communicate his musical needs to his instrument. Conceiving of a musical event or structure is only the beginning. The musician working in the electronic medium then must translate his concept to a language understood by his instrument. This chapter deals with the parameters of loudness control through amplifiers and various aspects of timbre through filtering. Again the emphasis is placed on what each circuit is doing to the electronic signal.

Amplification and Gain

With the existence of a multi-million dollar home hi-fi/stereo industry the term *amplifier* and its concept is familiar, at least in part, to almost everyone. An amplifier, of course, amplifies! Technically this means that it is a device which increases some externally generated voltage. Earlier, it was explained that voltage levels, or the degree of excursion that a waveshape exhibits, determines the loudness of a signal. This degree of excursion, or amplitude, is a musical variable that is usually spoken of as loudness (loudness being a subjective measurement of amplitude). The musician working in the electronic media deals with amplification on several different levels. Sounds—more specifically, signals produced by electronic instruments—are quite low in magnitude. The exact strength of an audio signal from an oscillator varies with each manufacturer. Systems on the market today have output voltages anywhere from 1 to 10 volts.[1] These voltages carry with them a variable called *impedance*, which is a measurement of electrical resistance, measured in units called ohms (Ω). It would be unnecessarily confusing to attempt a detailed discussion of impedance at this point. For those interested, the output impedance in most electronic instruments and studios is usually between 600 and 1k ohms. If this is meaningless to you, either forget about it for now or ask a technician. The point is that these signal levels coming out of most electronic instruments are not strong enough to drive a speaker cone. Hooking an oscillator directly to a speaker will produce little, if any, sound—certainly not enough to be of any real musical use. Therefore, one must raise the voltage level, or waveshape excursion, to such a magnitude that it can efficiently drive a speaker cone. And this must be done without changing the original frequency or waveshape. The device used to accomplish this is a *power amplifier*. The power amp is not an integral part of the electronic instrument but certainly is a major factor when it comes to the final sounds. The use

1. This information is usually given on the instrument's specification sheet. Because of voltage variations it is not advisable to interconnect instruments made by different companies without first checking the voltage and impedance levels.

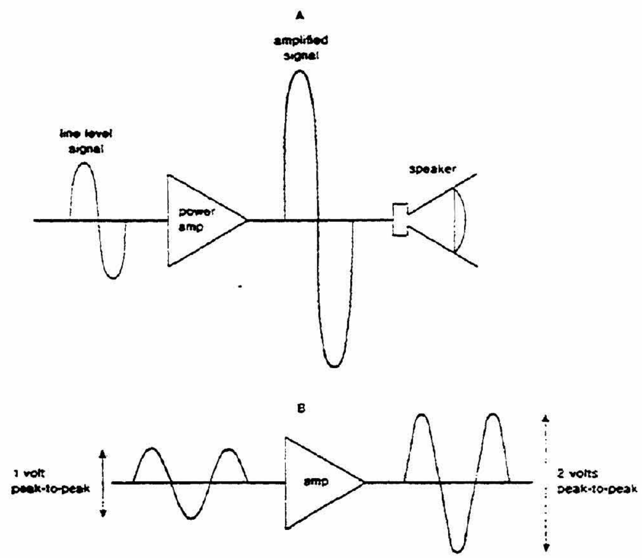

Figure 4.1. Amplification and gain

of power amps will be discussed in the consideration of live performances (chapter 15); but, for the present, it will suffice to say that their function is to take a *line-level* signal (about 1.4 volts) from an electronic instrument and boost it to a level that has enough energy to efficiently move a speaker cone (see figure 4.1).

Voltage Controlled Amplifiers

It is certainly redundant to say that loudness is a dynamic variable for the musician. However, the effective use of loudness variations requires a bit more detailed understanding of what is involved with amplification in electronic instruments. The amplifier of most concern to the musician is called a *voltage controlled amplifier* (VCA), sometimes referred to as a *gate*. At this point we need not be concerned with the "voltage controlled" aspect of this module, and therefore this discussion will be limited to manual or hands-on front panel control. The VCA provides *gain*. This is a word which has been used before and refers to the amount of voltage an amp provides. If a signal goes in to a circuit at a peak-to-peak reading of 1 volt (see figure 4.1B) and comes out at a peak-to-peak reading of 2 volts the amp is said to have a gain of 2. If the signal comes out at 0 volts (silence) the gain is 0. The amount of gain, under manual control, depends on the setting of the gain pot, gain *offset* or volume control. When you raise the gain offset the output voltage is increased and you hear a stronger signal from the speaker. In electronic musical instruments it is common for the VCAs to have a gain of 1, or *unity gain*. This tends to be a bit confusing because with unity gain there is no voltage increase. The signal goes in, and if the gain offset is at maximum, the output signal has the same magnitude as the input signal. An amplifier with unity gain is really an *attenuator*. It can produce variations in gain or loudness not exceeding the strength of the original signal before it was patched into the amp. The reason for this is explained by the basic design philosophy of electronic instruments. Each module, oscillator, amplifier, etc., is a parametric building block. In some situations certain building blocks may not be necessary for the generation of a musical event, so that the modules must be designed, in such a way that they can function with or without any other module. For example, there may be a situation where loudness is not a variable and the signal is needed at full gain directly from the oscillator. Therefore the amp may be by-passed, (see figure 4.2, oscillator A). This "voice" may be joined by another voice that does require loudness variations (figure 4.2 oscillator B). Oscillator A has a constant loudness, while the loudness of oscillator B is controlled by a VCA. If the amp has more than unity gain, great care has to be taken to insure that it will not overpower oscillator A which has no gain increase. But since the amp has only unity gain, at full output (the gain offset all the way up) it will perfectly match the amplitude of oscillator A. Sometimes gain is specified in decibels. Unity gain is the same as a gain of 0 db.

If an amp is used for setting final manual levels which do not require continuous variation, a mixer might perform the same function with a little more versatility. As explained previously, a mixer allows the combination of many signals down to a single line without any distortion of the original sounds. Adjusting the balances on a mixer is the same as adjusting the gain on an amplifier or set of amplifiers. It is not unusual for mixers (and amps) to have gain, a common figure being 6 db or a gain of 2. On a mixer the amount of gain is initially established by the input pots. These pots are attenuators which determine the incoming strength of the various signals. Figure 4.3 illustrates a mixing situation with two different input settings.

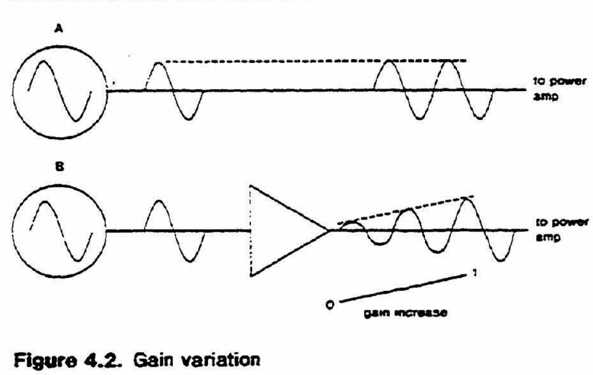

Figure 4.2. Gain variation

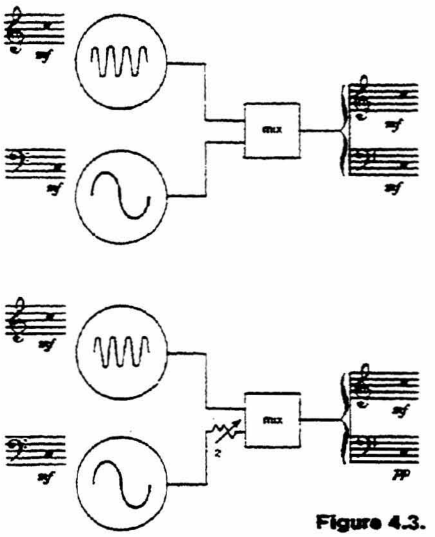

Figure 4.3. Gain control in mixing[2]

Figure 4.3A shows two sine waves two octaves apart mixed down to a single signal with equal gain for both signals. Figure 4.3B illustrates a similar situation but the lower octave C^4 is attenuated. The final mix has the same frequency components but the lower octave is softer.

Amps used in electronic music instruments sometimes have mixing capabilities built into the circuits. Such is the case with the Moog 902. This module, considering only manual control capabilities, will accept two incoming signals and provide an *equal mix of both* at the output. The gain of the mix is 0 with the *fixed control voltage* pot at 0 and unity gain with the same pot at 10. There are also two outputs marked "+" and "−". These two outputs are 180° out-of-phase with each other. The Eu 2000 amplifier is of similar design except that it has three inputs; "full level," "+" and "−" (see figure 4.4). All three inputs are mixed internally before the final amplification stage, which, in this case, has a gain of 2 (6db). The inputs marked "+" and "−" have input attenuators to allow various mix levels to be established before amplification. The "−" input is an *inverting input*, as opposed to the Moog 902 *inverting output*. The real applications of these inverting features will be described when dealing with voltage control (see page 37).

Note that in figure 4.4 the amp has a switch marked *linear* and *exponential*. In this case *linear* means that the gain increases in exact proportion to the pot setting. *Exponential* indicates that the gain increases exponentially to the pot position; the higher pot positions give greater gain variances. Expressed in another way, linear means equal changes in output *voltage* in response to the manual control (electrically smooth), and *exponential* means equal changes in output *decibels* in response to the control (perceptually smooth). Linear control provides a consistent response throughout the range of the amp. Exponential control means that the amp is very sensitive to gain increases at low pot settings, and the sensitivity decreases as the pot setting is higher. Therefore, if one needs very delicate balances at soft levels, he has better control in the exponential mode. On some amps the linear/exponential switch will make a difference where the 0 db gain or silence occurs, in accordance with the pot position. If no signal is passed through the amp in exponential mode with the pot a certain setting, switching to linear mode will result in a slight signal gain at the output. A comparison of exponential and linear response is given in figure 4.5. The exponential curve is really a decibel response, reinforcing the statement that linear control results in equal change in voltage, and exponential control produces equal changes in decibels. Some instruments with linear/exponential options may attach this function only to incoming external control sources, and the manual control may be only linear. If there is any question, refer to the instrument specification sheet or instruction manual. If your instrument does not have linear/exponential options don't feel that you have an inferior device. Many of these

2. is an electronic symbol for a variable resistor, or pot, which is used to affect the attenuation.

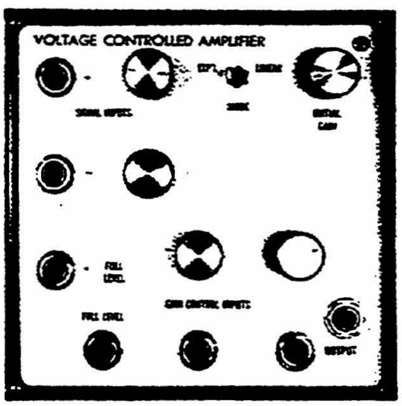

Figure 4.4. Eu 2000 Amplifier (Courtesy of Eu Systems, Inc. Used by permission.)

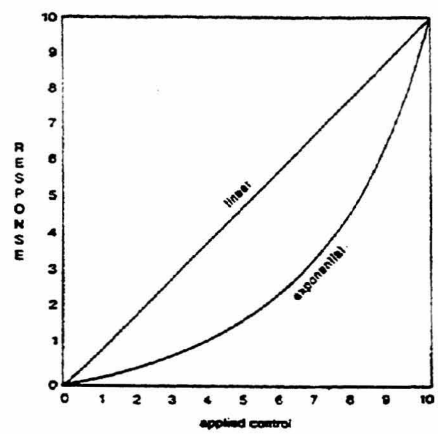

Figure 4.5. Linear and exponential response

design decisions are made to increase the compatibility with other modules in the system and are not necessarily an indication of the instrument's quality or potential usefulness.

If your studio or instrument facility is equipped with Buchla 100 Series instruments you will find that the 110 Dual Voltage Controlled Gate (another term often used for VCAs) does not provide for manually applied front panel gain or offset. The initial amplification is provided by external control voltages and the output gain is then attenuated to the desired level by the front panel pot. If this is the case the exercises suggested in this chapter can be done using a Buchla 106 mixer (which has a gain of 2). The Buchla 292 Quad Gates have the manual offset control (see page 28).

Pre-Amplifiers

Another type of amplifier of concern to the musician is a *pre-amplifier* or *pre-amp*. Many audio signals, usually those generated by mechanical means such as a phonograph or a microphone, produce signals too weak even for the power amp. These signals are so small that they are measured in millivolts. If one plugged a mike directly into a power amp the output signal would be so weak that it would not be useful. Power amps are designed to amplify what is referred to as a *high level* or *line level* signal. Such signals are on the order of 1 volt at 600 Ω. To get a mike's signal up to that level an intermediate preamplifier is used. The low level signal is plugged into the pre-amp, the pre-amp boosts the low level signal up to line level, and at this point the electronic signal can be treated as if it were the same as an oscillator signal subject to any kind of amplitude shaping by means of the VCA. The pre-amp will usually have an impedance or gain control on the front panel. Various types of mikes have different strengths of signals referenced in terms of impedance. A low impedance, or low Z, mike has a rating of between 50 to 250 Ω. A high Z mike will have a typical rating of 25k Ω. Check the impedance specs for your available mikes and see that the impedance switch on the preamp is in the correct position. If the sound is muddy or distorted this is an indication that the impedance match is not correct. Some pre-amps may have *gain switches*. Such is the case with the Eu 2420 Dual Pre-Amp (see figure 4.6). The gain positions for this instrument are marked 20 db, 40 db, and 60 db, and provide a gain of 10, 100, and 1000 respectively. After the signal has been boosted by one of these factors, the final signal is then attenuated by a level control.

Readers familiar with rock amplifiers will know that they can plug a mike or guitar (which is also a low level signal) directly into the amp, apparently without the use of a pre-amp. This type of amp is

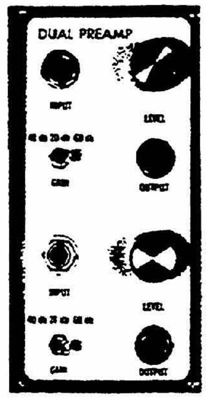

Figure 4.6. Eu Dual Pre-Amp (Courtesy Eu Systems, Inc. Used by permission.)

known as an *integrated amplifier*, and the pre-amp is built into the general circuit and wired directly to the power amp stage. The volume and tone controls are part of the pre-amp stage, and the power amp stage then amplifies the final signal. Most keyboard oriented electronic instruments such as the popular ARP Odyssey and Mini-Moog have two different output signals. The *high level output* or *line level output* is ready to be patched into a power amplifier. If this high level signal was fed to an integrated amp one would then be attempting to pre-amplify a signal that is already pre-amplified. In this case the *low level output* of the instrument should be used, since it can be taken to the integrated amp and used with other low level signals such as electric guitars, mikes, etc. Much more will be said about pre-amps and mikes; the information given here is intended only to avoid some possible distorted sounds during the initial stages of exploring the instrument.

Filtering: Subtractive Synthesis and Basic Filtering Concepts

Earlier in this chapter mention was made of additive synthesis whereby the musician builds up waveshapes and sound complexes by methods of mixing together of less complex components. Another method which takes the opposite approach is called *subtractive synthesis*. As the name implies, this method involves using a complex sound as the initial material and removing those frequency components that are not desired. Just as additive synthesis can, at least hypothetically, build up any complex from its individual sine wave components, subtractive synthesis can, again hypothetically, remove any number and combination of components from a complex structure. For example, it is possible to begin with a sawtooth wave and remove all of the overtones, leaving only the fundamental, a sine wave (figure 4.7A). Similarly removing all of the even numbered harmonics would produce a reasonable square wave (figure 4.7B). Removing only

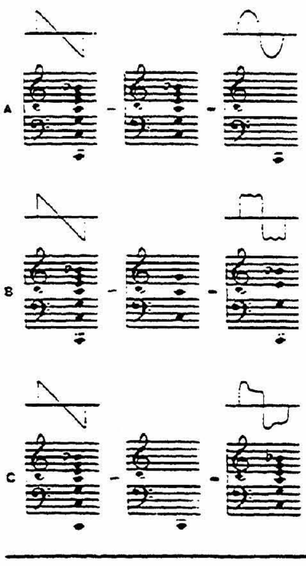

Figure 4.7. Subtractive waveshaping

the fundamental, leaving all of the overtones, would produce an unusual waveshape with transposed harmonics or "half harmonics," that is, all of the harmonic overtones are present but one octave lower than usual (figure 4.7C). If this is confusing, think of the 1st harmonic overtone, which is usually the octave, being transposed down to the unison, the 12th is now a fifth above the new fundamental, and so on. This is an academic example and not as sonically striking as it might seem.

Low Pass Filtering

The module that accomplishes these kinds of transformations is called a filter. Just as an amplifier provides control in loudness in the *amplitude domain*, so also the filter provides for control in the *spectral domain*. In fact one may hear a filter referred to as a *frequency selective attenuator* or *frequency selective amplifier*. In other words, a filter is a device that provides gain for only selected portions of a composite signal or spectrum. The portion of the signal which is affected is determined by the function of the filter. A *low pass filter*, perhaps the most common of the filters built for electronic music instrumentation, will amplify or "pass" only those frequencies below a specified frequency setting or *cut-off* (f_c).[3] Referring to figure 3.11 (page 16) the original spectrum is a sawtooth wave with a fundamental frequency of 65.4 Hz, C^3. If this signal is patched into a low pass filter with a cut-off of somewhere between 65.4 Hz and 130.8 Hz (the octave harmonic) the filter would suppress those frequencies above the cut-off, ideally leaving only the fundamental frequency. If the cut-off frequency were raised to slightly above 130.8 Hz, the filter output would be a structure with only the fundamental and 2nd harmonic. Starting at the other end of the spectrum may be more in keeping with the idea of subtractive methods. If the f_c (cut-off frequency) of a low pass filter was set at maximum any waveshape would theoretically pass unaltered. This is usually not the case, since a sawtooth wave in theory has an infinity of harmonic overtones, and the cut-off of a filter should go infinitely high. The reality is that these two "infinities" may not be the same. A filter has a limit to its high end, and an oscillator will not produce an unlimited number of overtones. This is easy to test. Just listen to a signal straight from the oscillator and compare it with the same signal patched into a low pass filter with the f_c at maximum. In addition to some slight high frequency loss there will probably be some *coloration*. Coloration refers to slight attenuation or amplification of various parts of the spectrum caused by the circuit. Keeping this patch, gradually lower the f_c and the upper harmonics will be sequentially removed. Figure 4.8 illustrates this process. Also note that as f_c is lowered the edge of the waveshape begins to round off, eventually resulting in a smooth sine wave. The lesson to be learned here is that waveshapes with more crests and edges usually indicate the presence of more frequency components.

Details about filter response such as *roll-off* and Q are best deferred to the chapter dealing specifically with filtering, but brief mention will be made here to introduce this concept. The below figure is a useful example, but things usually don't happen that efficiently. A filter cannot abruptly cut off at the specified f_c. The f_c is a selected spot where the filter has caused a 3 db attenuation in the spectrum. The attenuation continues from that point at a given rate, slope or roll-off. A common figure for roll-off in a low pass filter is 24 db per octave. This means that if our 64.5 Hz sawtooth wave was patched into a 24 db/octave filter with a f_c of 196.2 Hz (65.4×3), the output would be a spectrum with the 3rd harmonic down 3 db, with the loudness decreasing as one goes higher in the overtone series. The octave above this cut-off,

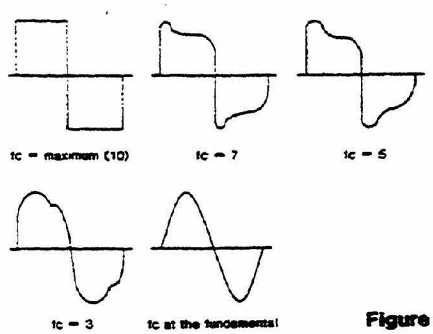

Figure 4.8. Low pass filtering

3. Sometimes called the "break" frequency.

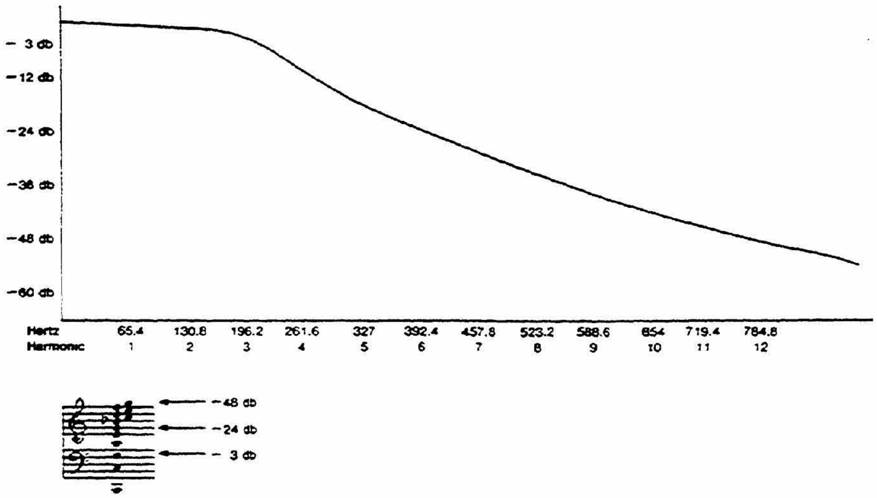

Figure 4.9. 24 db/octave low pass filter slope

the fifth harmonic is down 24 db and the next octave, the 12 harmonic, would be down 48 db (see figure 4.9). Filter designs will vary with the manufacturer and such roll-off figures are usually given on the specifications sheet. These figures will usually be multiples of 6 (12, 18, 24, etc.).

Q is a circuit modification that alters the effect of a filter. The mechanics, applications, and tricks made available with Q are covered in chapter 9. Here Q can be explained as an additional amplification process within the filter. If a low pass filter is set with a cut-off of 1k Hz, any signal or spectral component just below cut-off frequency will be amplified as the Q is increased. Most low pass filters, such as the Moog 904A pictured in figure 4.10A have a Q pot on the front panel (in this case called *regeneration*). With the Q set high, manually sweeping through a harmonically rich waveform will make the filtering process more obvious. Figure 4.10B illustrates what happens to the cut-off frequency as the Q is raised. Notice that as Q is raised the part of the spectrum just below f_c becomes proportionately louder and stronger. At the same time the rest of the spectrum passed through the filter becomes slightly attenuated.[4] The overall effect is the f_c becomes more and more prominent. Much more will be said about Q in chapter 9, but for the present all we need to know is that Q emphasizes f_c and has a numerical value related to the increase in gain at the cut-off; the higher the Q, the higher the gain. Gain can be increased to the point at which the filter begins to distort or "break up" the cut-off frequency. Q can also be increased to the point where the filter will begin to "howl" or oscillate. This type of oscillation is a sine wave and can be useful for certain techniques (covered in chapter 9). This application is only mentioned here because it is an instrument variable and can result in some phantom pitches and distortions if one is not aware of the process. Other names for Q in addition to "regeneration" are "resonance," "response," "emphasis" and "feedback."

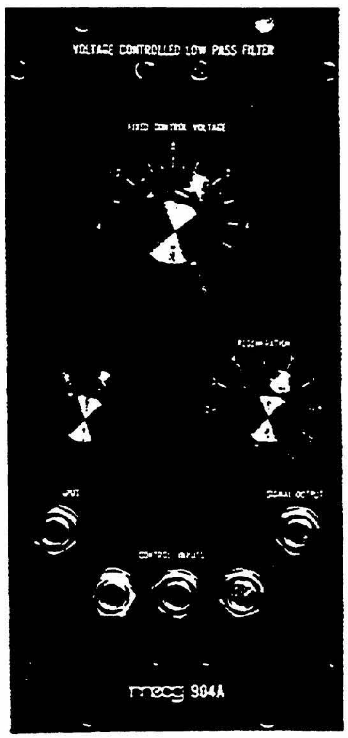

Figure 4.10A.
Moog 904A Low Pass Filter

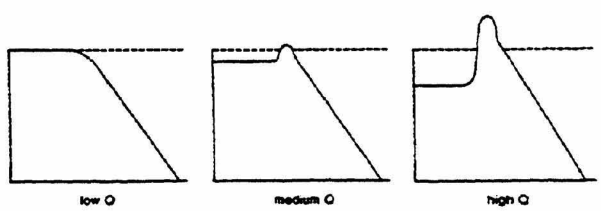

Figure 4.10B. Q comparisons in low pass filtering

4. This band-pass attenuation is not always the case and depends on individual circuit design.

Other Filter Functions

Another common filter format is the *High Pass Filter.* As the name implies, it accomplishes the inverse of the low pass filter, attenuating all of the frequencies *below* f_c and passing all of the spectral components above f_c. Other filter formats include *band pass, band reject* or *notch,* and the *fixed filter banks,* which is a collection of band pass filters mixed to a single output. The functions of these filters are indicated by their descriptive names. *Universal filters* are single modules which combine the four basic filter functions, —high pass, low pass, band pass, and band reject,— into a single instrument. Another filter variation which may be available to the musician is what ARP Instruments call the *Filtamp.* It is a very common practice simultaneously to control the amplitude and timbre of a signal by patching it through an amplifier and then through a filter (see the "basic patch" on page 29).

The Buchla 292 *Quad Low Pass Gate* (figure 4.11) has similar functions. This module consists of four independent gates, each of which has three possible operational modes. The mode switch in the upper position turns the gate into a low pass filter; the lower position turns the gate into an amplifier; the middle position, "combination," combines the amp and low pass functions to provide "spectral gating"—a process similar to simultaneous spectral and amplitude control. In this mode, as the amplitude is lowered there is a simultaneous loss of high frequencies. Both of these functions occur at the same time as they share the same offset control. The audible result of this process is a slight emphasis of the lower partials as the gain is lowered. This is most striking when accomplished by fast external controls (see page 35). When doing the experiments at the end of this chapter, notice especially what mode the gate is in. The output of each gate is independently available, or an equal mix of all four is available from the output marked "all." The Buchla 200 Series instruments do not provide a variable low pass filter as a separate module.

A common experience for the novice is to find that the filter is blocking the sound. A signal is present at the input but nothing comes out. If this happens at least one of three common errors is being made. First, if the filter has mixing capabilities, as with the ARP 1006, the input attenuator may be turned down. Second, the f_c may be so high or so low that it is beyond any spectral content present in the sound. The third, and most common error is that one is trying to filter a sine wave. Remember that a sine wave has only one spectral component and therefore it is the only thing that can be removed. This is not so obvious as it may appear. If a filter is a frequency selective attenuator all it can do with a sine wave is to attenuate the whole

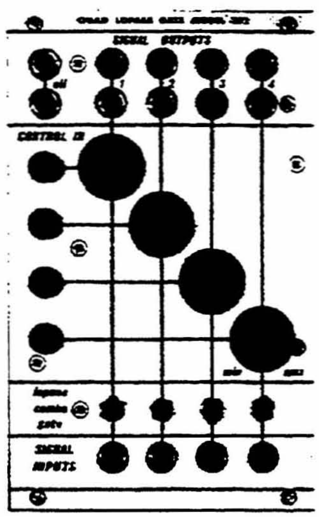

Figure 4.11. Buchla Series 292 Quad Low Pass Gate

thing. In this case the filter is being used as an amplifier! This is a good thing to keep in mind when you run out of amps, but for the present, avoid filtering sine waves!

Just as with amps and oscillators, there are as many filter modules as there are manufacturers. And this portion of the present chapter is only meant as an introduction to the low pass process and how it affects the waveshapes, both sonically and graphically. It is important to realize that the spectral characteristics of a signal are generally described in terms of waveshape,—the patterns an audio electrical voltage produces. The basic waveshapes introduced at the beginning of this chapter are by no means models of a "correct" or automatically desirable musical sound. They are only starting points which are usually further shaped by various processes.

Pitch, loudness, and timbre are three of many variables at work in all music, and this chapter has only skimmed the surface of the musician's concern with these obvious parameters. This chapter does not supply definitive information about oscillators, amplifiers, and filters, but gives the reader enough information to proceed with his studies of electronic instruments. To aid in the task this chapter has explained pitch, loudness, and timbre as a single concept-voltage fluctuation. As one becomes involved with finer means of control and is introduced to new structural situations, he will find that he is still dealing with the same process,—the shaping of voltages. As musical events are imagined in the mind's ear, the composer, and more often the performer, will have to adjust his battery of modules to accommodate input, structure, and output. If he can visualize what is happening to the electrical gestures at each point in the instrument he will be more effective and proficient at his job.

The Basic Patch

An example of this process is illustrated with an instrument configuration that has become known as the *basic patch* (figure 4.12). This is a three-parameter instrument consisting of an oscillator, a filter, and an amp connected in *series*. Let's assume that the oscillator only provides a sawtooth waveshape and has no output attenuation; the filter is a low pass with only a moderate amount of Q, and the amplifier has unity gain. Looking at things quite graphically, let's quickly review each function in this chain of parameters. The oscillator's only variable is speed or frequency (assuming a single waveshape). The low pass filter, assuming it receives a spectrally rich signal, has the ability generally to re-shape with original signal by removing overtones. Since the amplifier will probably have unity gain its only variable is to attenuate or compress the signal it receives from the filter. The nature of the final musical sound is dependent on the status of these three variables. Each may be *static* (non-varying) or *dynamic,* (undergoing change as the event is being perceived). The first set of exercises are several simple sonic events described verbally, then notated with the normal musical conventions and then re-notated in terms of how each module affects the voltage. For this exercise timbre will be notated on a scale of 0 to 10, 0 being a sine wave with all of the overtones filtered out, and 10 being an ideally unaffected sawtooth wave with f_c at maximum. Thus timbral crescendi and diminuendi can be notated as in figure 4.13. This notation is convenient, as the numbers can stand for analogous filter settings. Likewise the amplifier offset can be notated on a scale from 0 to 10, 0 being complete attenuation and 10 being unity gain. Pitch will be notated in Hertz for the oscillator. The important point here is not the numbers but rather the nature of the sound as these parameters are varied.

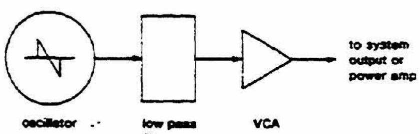

Figure 4.12.
The "basic patch"

Exercises and Projects

1. Study and discuss the examples in figure 4.13. Try them out on available instruments and observe whether the sonic result is as described. If you have access to an oscilloscope, invent some similar examples. Take these patches apart and listen to how the signal sounds as it comes out of each module. A convenient way to do this is to make the patch shown in figure 4.14. The unprocessed oscillator can be heard by turning up pot A on the mixer; the signal from the filter before it reaches the amp can be heard by turning up pot B, and the whole series of processes is available at pot C.
2. If possible set the oscillator to a sub-audio frequency (you may have to use a special sub-audio oscillator), using the same patch as in figure 4.12. You will hear a series of clicks or pops that occur at the frequency of the oscillator. How does the f_c of the filter affect these pops?
3. If you have the available instruments configure three or more of the "basic patches" with sub-

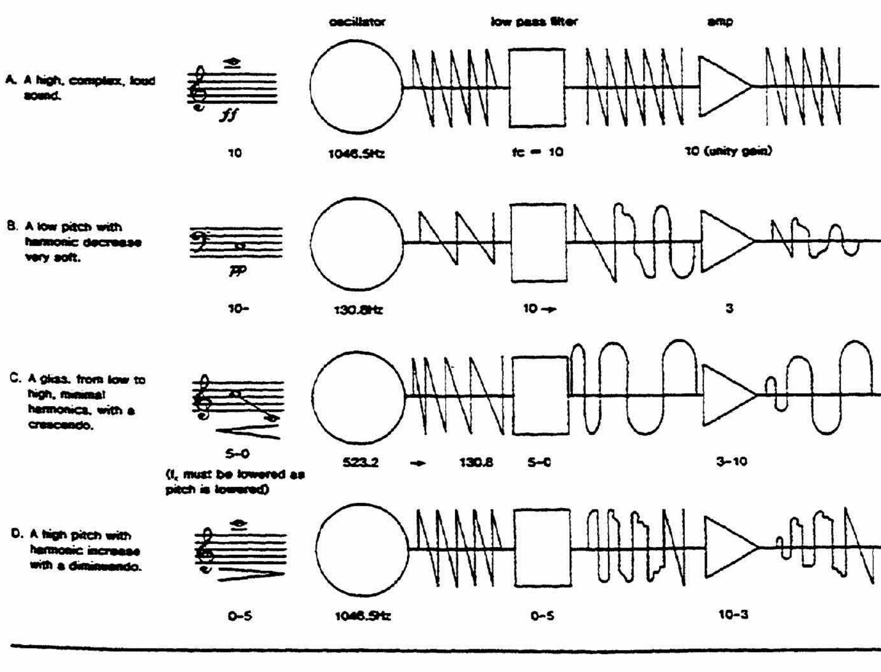

Figure 4.13. Parametric patterns

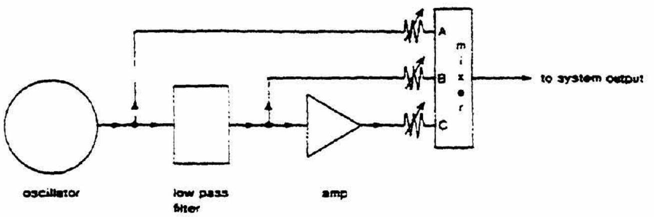

Figure 4.14. Processing comparisons

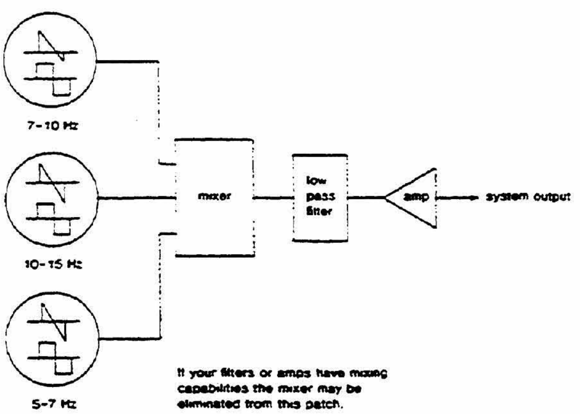

Figure 4.15. A simple rhythm machine

audio oscillators. Vary the frequency of each rhythm and also vary its prominence with the filter and the amp. If there are not enough amps and filters substitute the patch shown in figure 4.25.

4. At what point in the above exercise does a rhythm become a pitch?
5. Substitute a microphone for the oscillator in the basic patch. Be sure to check the mike impedance and make the needed adjustments on the pre-amp. How do the filter and amp affect acoustic signals such as your voice. If possible observe this process on an oscilloscope.
6. Build some interesting drone chords. Then using the patch in figure 4.15 sweep the f_c of a low pass filter around to highlight different spectral areas of the drones.
7. Try "coloring" some timbres or chords with bits of filtered noise, as in figure 4.16. How much noise can be added until the sense of pitch is lost? This is called *masking*. Is there a relationship between the filter's f_c (filtering the noise) and the oscillator's frequency when this masking threshold is reached?

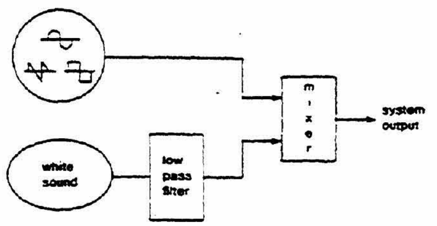

Figure 4.16. Coloring with noise

8. What do input, structure, and output have to do with these exercises?
9. Keeping in mind the idea of input, structure, and output, combine two or more of these exercises and make some music.
10. Make up a set of shapes or gestures. Assign a player to control a single parameter each; one player for the oscillator, one player for the filter, and one player for the amplifier. Each player is then given a series of gestures with indications of how long each gesture should take, and then on cue those shapes are applied manually to each parameter. For example the "score for the oscillator player may be  which would indicate a steady glissando followed by some high frequency variations, a sudden drop to a medium register, and then a long downward glissando to the sub-audio register. Likewise the filter and amp player should have their own gestural score. If the oscillator has waveform symmetry or waveform mixing functions, apply the same type of gestural scoring. If filter Q and linear/exponential amplification are possible, include them as variables. Instead of inventing gestures look around your environment to see what shapes are already available (e.g., the horizon, temperature variations through the day, the movement of a "dancer" in a given space). Composer Charles Dodge uses a similar technique for determining parametric design in his work *Earth's Magnetic Field* (Nonesuch H-71250). Some scores by John Cage may be applicable for this type of etude. Generalize some gestures and attempt to apply them to the individual waveforms outputted from the filter or amp (micro-structure), as well as to the over-all macro-structure.
11. With an ensemble of patches like in figure 4.15 make a realization of Frank McCarty's score shown in figure 4.17. Use only sub-audio clicks and pops, varying waveshape, f_c, Q and amplification. A recording of one realization of this work is available on Ocean Records, Composer's Cassettes, Series I, Issue 1.

FRANK L. MCCARTY

PRESENTS

TACTUS TEMPUS

a controlled improvisational process

IN WHICH

at least five VISUAL pulse-producers ⟷ AND ⟷ at least five AUDIO pulse-producers

SUCH AS

slide projectors...................OPERATING.........................percussion
overhead projectors..............INDEPENDENTLY...............electronic systems
lasers.................................OR..............woodwinds, brass, strings
film projectors.....................SOMEWHAT....................voices and bodies
lights and mirrors..................UNITED..........................found sounds

COMBINE TO PRODUCE

A Pulse-Train

IN WHICH

Performers individually following the DENSITY-INTENSITY CURVE, will make widely-seperated PULSES which gradually (and according to the plan found below) increase in DENSITY AND INTENSITY and then return to their original state.

THE DENSITY-INTENSITY CURVE

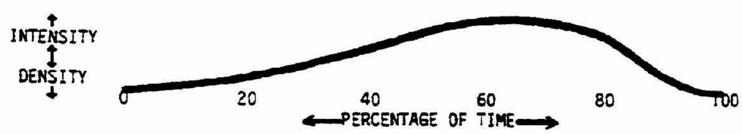

Performers should agree upon the duration of THE PERFORMANCE (being the minimum of fifteen minutes in length) and the total range of DENSITY-INTENSITY (being possibly from one pulse every twenty seconds up and into the domains of PITCH and VISUAL CONTINUITY).

"THE PLAN"

Performers will set a personal TACTUS (c.♩=50) to be used throughout the performance. Within that TACTUS, produce one single PULSE followed by a number of beats of rest. REPEAT THIS PATTERN FOUR TIMES. Produce that original pulse again and add ANOTHER PULSE during the original beats of rest. NOW REPEAT THIS PATTERN FOUR TIMES. Continue this process of pulse-addition (conforming to the DENSITY-INTENSITY CURVE), until reaching the top of the range. Then (indicated by the CURVE) REVERSE THE PROCESS.

INTERPOLATIONS may be added to the basic process indicated by the CURVE, through brief anticipations of or returns to other sections of the CURVE.

TIMBRE (that is, visual and auditory color) should be varied throughout, conforming to some pre-determined plan, but such changes should not reflect the contour of the DENSITY-INTENSITY CURVE.

FREE INTERPRETATIONS OF THIS PLAN ARE SINCERELY SOLICITED

Figure 4.17. *Tactus-Tempus* by Frank McCarty

5 Concepts of Voltage Control

The preceding chapters have stressed the idea that electronic instruments require the player to think parametrically. A musical event consists of several parameters shaped and combined to result in a final sonic event, however simple or complex. Chapter 1 introduced the notion that any musical instrument demands some manner of input, a determined physical structure, and a "musical" response. Chapters 2 through 4 limited themselves to direct manual input or control, a basic parametric structure dealing with pitch, timbre, and loudness,—basically simple musical events. By this time it is certainly evident to the musician that more complex structures will require more involved parametric organization and more intricate methods of playing the instrument. At this point it is again necessary to examine the philosophy of what we understand by "playing" and apply that concept to electronic instrumentation. The following lists categorize several musical variables under the basic parameters of frequency, spectrum, and amplitude:

Frequency	*Spectrum*	*Amplitude*
pitch (discrete and gliss)	timbre	loudness
vibrato	loudness	rhythm
timbre	vibrato/tremolo	tremolo

The appearance of a particular parameter under more than one category reminds one that perceptually these categories have definite effects on each other. This list is by no means all inclusive, but is sufficiently complete to make the point.

Learning an acoustic instrument is, in the early stages, primarily the development of kinesthetic skills. Depending on the instrument, one must master all of the dynamic parameters which the instrument provides, and initially this is a matter of coordination. Controlling pitch on a violin is quite a different matter from controlling pitch on a piano; the control of timbre on a trumpet requires a different manner of input than controlling timbre on a clarinet. The mastery of these skills is made more difficult by the fact that on each instrument several parameters may be linked to or associated with one input. The fiddler's left hand is responsible for pitch, vibrato, note duration, and varying degrees of articulation, while right hand activity controls loudness, rhythm (durations), timbre, and articulations. On many instruments a single parameter is directly determined by two independent inputs: a trumpet derives its pitch from both the depression of valves and embouchure variation. This suggests that musical events involve two types of parametric organization: the first is a matter of perception, the second is a matter of performance mode. And just as with any other instrument, both are of concern to the performer of electronic instruments.

Offsets: Fixed Control Voltages

As stated earlier in this text, contemporary electronic instruments are a collection of possibilities. Depending on the desired events, the musician must physically organize his available resources—the basic patch offered in chapter 4 being only one simple approach—and then decide on some means to initiate and control the resulting sound(s). As integrated electronic music systems were being developed, it became evident that the complexity of dealing with many differentiated and ongoing parameters could be simplified by making each parameter controllable in a conceptually unified manner. The previous chapter explained the basic dimensions of sound in terms of voltage changes. A change in some aspect of the sound was accomplished by changing the way voltage was behaving in a particular circuit. Turning up a pot on an oscillator made the voltage fluctuations increase in speed, resulting in higher pitches; raising the pot on an amplifier increased the strength of the voltage fluctuations, resulting in louder sounds.

The behavior of an audio voltage in a circuit is controlled by the application of another structural level of voltage. These controls are usually lower in frequency as they impart information concerning actual musical structure such as individual note shapes, articulations, phrasing, and overall formal design. The reader might again consider the various frequency ranges of musical organization and response discussed in chapter 2, page 9. When one turns up the pot on an oscillator, that pot applies a fixed amount of positive voltage to the circuit, which causes it to oscillate faster. As the pot is turned down, the amount of fixed control voltage decreases, causing the circuit to oscil-

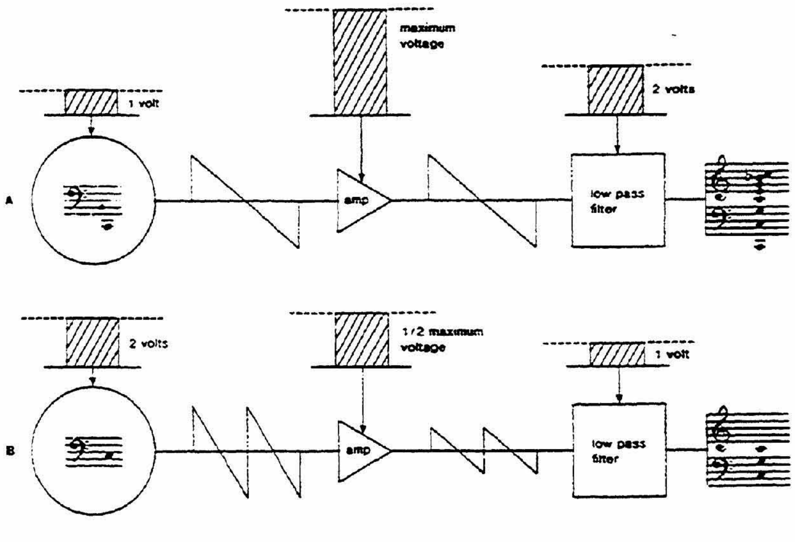

Figure 5.1. Parametric responses with manually fixed control voltages

late more slowly. By the same token, the direct manual control of a low-pass filter involves manually determining the amount of *fixed control voltage,* which has been referred to as *offset.* A low control voltage results in a spectrally low cut-off frequency; raising the front panel pot increases the amount of control voltage applied to the filter control circuit, thereby raising the cut-off frequency.

Figure 5.1 illustrates a version of the basic patch with two different sets of manually fixed control voltage levels. Not all electronic instrumentation operates within the same control voltage range. This is a hypothetical example with a control voltage range of 0 to +10 volts.

Figure 5.1A has a fixed control voltage of 1 volt applied to the oscillator, which results in a frequency of 64.5 Hz (low C). In figure 5.1B this control voltage has been raised to 2 volts, which raises the pitch one octave. In figure 5.1A the fixed control voltage has set the filter's cut-off frequency at 512 Hz, attenuating the spectrum above the 8th harmonic, in figure 5.1B the fixed control voltage was lowered one volt, lowering the cut-off one octave to 256 Hz. Since the pitch was raised an octave and the cut-off was lowered an octave, the resulting spectrum is hypothetically limited to just the fundamental.

In figure 5.1A the amplifier's fixed control voltage was at maximum, allowing the signal to pass at unity gain. Assuming a linear mode of operation (see page 24), cutting the amount of fixed control voltage in half will cut the gain in half. The dynamic marking in this case is purely subjective, and "mp" is not necessarily half of "ff."

Offsets establish the nature of the other strata of voltage activity in electronic instruments, and the fluctuating audio voltages are eventually heard as sound. It has been this writer's experience that the newcomer to the techniques of playing electronic instruments is often confused by these two levels of voltage activity. Whether the difference is philosophical or electrical, it must be clear in the musician's mind at what point he is working with the *source* of the sound or with the *control* of that source. Terms that will be used consistently throughout this book are *signal* and *control. A signal is a voltage fluctuating at an audio rate that will eventually be heard as a sound. A control is a voltage that causes some change in the signal.*

Dynamic Controls

A control source may simply be a manually established offset. If one stops here the delineation is simple. However, if one sweeps the frequency offset pot of an oscillator up and down, causing various rates of glissandi, isn't that still voltage control? The only difference is that the control voltage itself is fluctuating. A control may indeed be a fixed offset or it may be continually varied. A varying control is referred to as a *dynamic* voltage. This and succeeding chapters will cover a variety of control voltage sources which produce static and preset controls, as well as control voltages that fluctuate at speeds from sub-audio to audio rates.

It is still essential that the musician understand the difference between the *signals* and *controls*—signal is sound and control is structure. Both are voltage activities, and what is musician A's sound may be musician B's structure. For musicians A and B to perform efficiently, however, each must be very certain in his own mind about the flow of these two kinds of information. On some instruments this differentiation is entirely user-determined, while on others the levels are physically separated by types of patch cords or switching formats. The purpose of this text is to explain only the basic concepts and techniques of electronic instrumentation in general, and to avoid discussing the philosophical merits of various instrument designs.

Parametric Response to Controls

It should be obvious that direct offsets or manually manipulated dynamic controls are not the most efficient way to play electronic instruments. If one had to contend with just an oscillator it would still remain a complicated if not impossible task to play a precise musical scale. When this is combined with simultaneous controls of filters and amplifiers, one can easily understand why the majority of early literature of electronic instruments was subjected to tape storage. Since the late 1950s and early 1960s, designers have continued to explore the area of performer input, making a variety of *control voltage sources* available to the musician. A *control voltage source* is a circuit which produces a variety of changing control voltage levels. Specific control sources will be considered in the next chapter.

Voltage Controlled Oscillators

A series of control voltage applications will be explained in terms of an oscillator, as notated in figure 5.2. Irrespective of the source of voltage, it may be fixed or fluctuating. If the control voltage is fixed, it is usually an internal reference which is offset by the front panel pot. This offset may then be added to or subtracted from by an external control voltage source. The external control voltage is internally mixed with the offset voltage, resulting in proportional changes of the behavior of the parameter for which the particular circuit is responsible. Figure 5.2A indicates that an oscillator is to be manually offset to middle C (and presumably attached to a power amp and speakers). Instruments vary in voltage ranges and offset values, so that we will assume hypothetically that an offset of +3 volts will produce middle C. Since we are exploring the process of control voltages, the oscillator will be referred to as a VCO (Voltage Controlled Oscillator).

Figure 5.2B attaches an external control voltage of 0 volts to the VCO which is mixed with the internal offset. This obviously still equals 3 volts, which will result in no pitch change. Figure 5.2C adds an external control of 1 volt, mixed with the offset to equal 4 volts. In this case the 4 volt sum causes the VCO to produce a pitch one octave higher, C 512. Many, but not all, instruments have a one volt per octave response, but this standard will be assumed, in order to keep the numbers simple. Check your operation manual in regard to your own instrument. We can

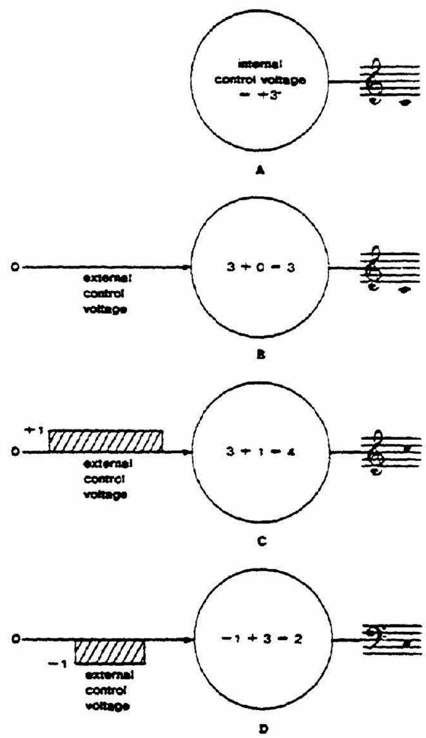

Figure 5.2.
Summing of internal and external control voltages

then postulate that each additional volt of control will raise the VCO frequency one octave. In some instrumentation, a control may also be a negative voltage. This poses no conceptual problem, since it is then only a matter of subtraction. A 3-volt offset (middle C 256) plus *−1* volt, or 1 volt negative, is 2 volts, lowering the VCO one octave to C 128 (see figure 5.2D).

The following example, figure 5.3, illustrates the need for exponential response in the control of certain parameters (see page 9). Figure 5.3A illustrates how two oscillators which are offset to the same reference will sound a unison. If a single control voltage is applied to both VCOs, they should respond the same way, maintaining a constant unison. Exact *tracking* of exponential oscillators can often indicate the quality of the instrument.[1] Slight variations in response can be dealt with by syncing methods to be discussed later. Figure 5.3B is a similar patch, but note that the VCOs are offset at the interval of an octave. VCO 1 has a 2 volt offset (C 128) and VCO 2 has a 3 volt offset (C 256). If both VCOs receive a 1 volt control, they must respond exponentially to maintain the octave relationship. In other words, both oscillators must double their frequency to keep tuned to an octave interval. VCO 1 changes to 256 (128 × 2) and VCO 2 changes to 512 (256 × 2). Both oscillators respond with the same intervallic change; but note that the change in terms of numerical values of Hertz was different. VCO 1 went up 128 Hz and VCO 2

1. If the oscillators in an instrument do not track, consult the maintenance manual for instructions on trimming.

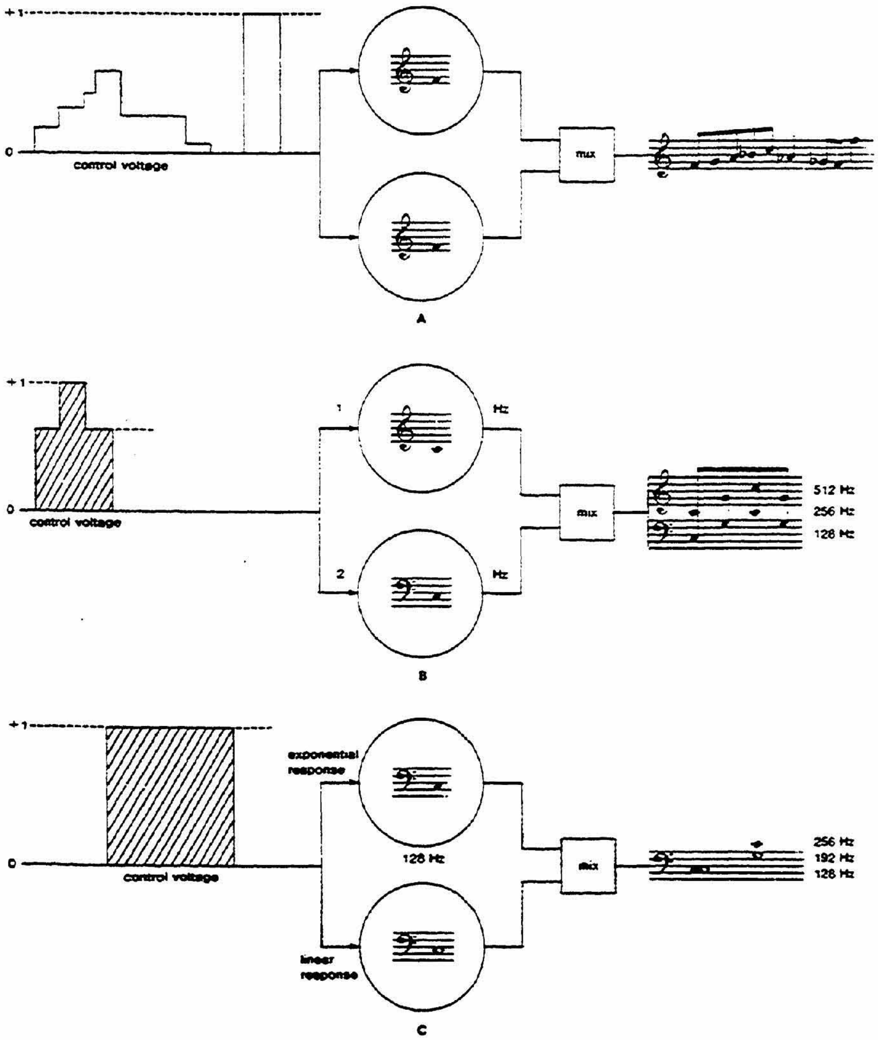

Figure 5.3. Voltage controlled oscillator tracking

went up 256 Hz. *Equal changes in musical interval, regardless of offset values, require exponential response.* If the response were linear, for each volt of control there would then be equal changes in the number of Hertz, not equal changes in musical interval. As in figure 5.3C, VCO 1 would perhaps change to 256, a numerical change of 128 Hz and an intervallic change of one octave; VCO 2, however, would only go up to G, an intervallic change of a fifth. To reiterate an important principle, *exponential response* means equal musical interval changes per applied control value, and *linear response* means equal Hertz change per applied control value. This is not to say that linear response is of no value to the muscian. Certain musical responses at other levels of organization require linear change, and this will be dealt with when the subject demands. If the composer/performer is in need of octave relationships and traditional orchestrational devices, then exponential response is required.[2]

2. Some instruments, such as the PAIA, have linear oscillators and maintain exponential relationships by generating exponential controls.

Voltage Controlled Amplifiers

The control voltage examples thus far have been discrete values (2 volts, 3 volts, 4 volts), all causing instant changes in the VCO's frequency. It is rather evident that not all musical states change instantly or remain fixed for long periods of time. A crescendo, glissando, vibrato, and vowel shifts in a song are all examples of continuously variable parameters. To accommodate this operation the musician must have devices that produce transitional or dynamic control voltages. Loudness is a parameter which usually requires some sort of evolutionary or continuously variable control. Figure 5.4 illustrates a VCO offset to middle C patched to a *Voltage Controlled Amplifier*, or VCA. The gain of the VCA is controlled by the sum of the internal offset voltage and the applied external control voltage. Figure 5.4A indicates that the VCA is offset to produce a loudness perceived as "mp"—perhaps 4 volts. Some dynamic external control voltage begins at 0 volts and increases over a two-second period to 10 volts, then decays once more to 0 volts.

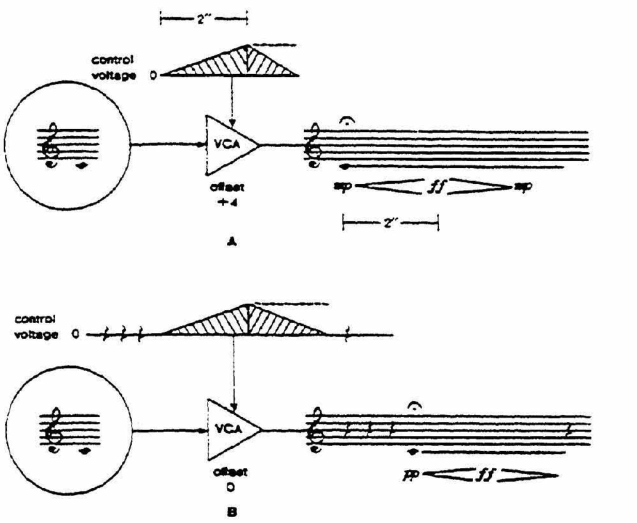

Figure 5.4. VCA response to a dynamic control

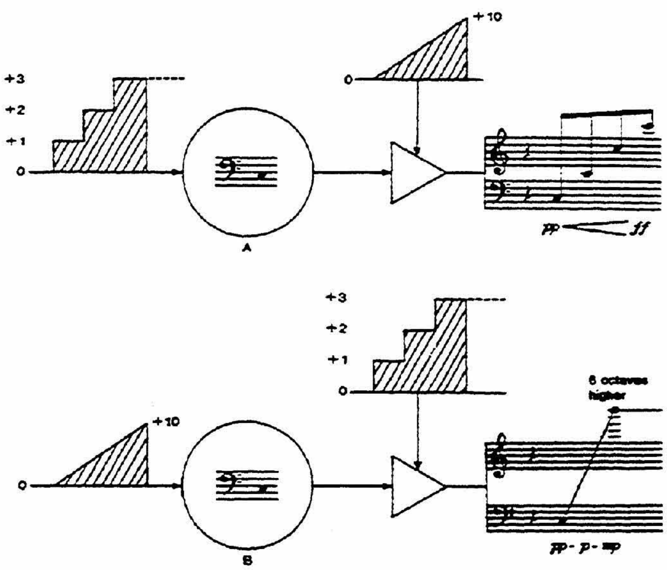

Figure 5.5. Co-existing controls

When applied to the VCA, the loudness will increase from its initial "mp" offset to a full "forte," then fall back to "mp," in proportion to the activity of the external control. As the external control voltage rises, it is added to the internal offset. Note that at the highest external control value, the VCA is actually receiving a total sum of 14 volts, but the circuit may be designed for a 10 volt maximum. Usually if a module receives a control which exceeds its response capability, it will respond only to its peak value and the excess control (or saturation) will not harm the circuit. This does not mean one should plug 110 volts into the control input of a module or even attempt some type of interaction between instruments. Check the operations manual before doing something that is not obvious on the instrument.

If the VCA's offset is at maximum and one attempts to use an external positive control, nothing will happen. The VCA is already at maximum gain and another control cannot make it any louder (usually!). In figure 5.4B the VCA is offset to 0, and no audio signal is passed. The signal will not be audible until some external control raises the gain to a perceptible level. Application of the same control as in figure 5.4A will result in a crescendo from silence to "ff" and back to silence (the offset). It should be clear that negative controls cannot lower the gain past 0, but can lower any positive offset value. More will be said about this in chapter 7.

Coexisting Controls

Dealing with two ongoing controls is proportionally complicated and is illustrated in figure 5.5A. A VCO, over a particular time period, receives a series of three discrete control voltage changes—1, 2, and 3 volts respectively. Assuming an offset of 128 Hz, the three voltage changes will produce three one-octave shifts to 256 Hz, 512 Hz, and 1024 Hz. Simultaneous with these voltage changes is a dynamic voltage beginning at 0 and ascending to 10 volts. This dynamic voltage is applied to a VCA with an offset of 0. The resulting sound would be three octave Cs, each beginning with silence and crescendoing to "ff." If the controls were reversed as in figure 5.5B, the sonic result would be an upward glissando at three increasing loudness steps. Since the dynamic voltage goes from 0 to 10 volts, this would produce a 10 octave glissando. To insure that the oscillator does not go out of audible range, the VCO should be offset to some lower frequency so that a 10 octave range can be accommodated. It should be mentioned that these control voltage contours are really no different than the manual shapes suggested for the exercises at the end of chapter 4. The only difference is that the external controls can be very precise, both in level and timing, because they are generated by instrumentation dedicated to their production and control. The coexistence and relationship between a multitude of control voltages defines 50% of an instrument's structure. The other 50% of the structure is determined by the routing or patching of the audio signals.

Control Voltage Processing

Just as an initial signal from a VCO is not the final sonic image in practical music making, most control voltages must be tailored and processed for certain applications. Once a control has been generated, it may be processed in much the same manner as an audio signal, and a single control may be given a variety of identities or transformations. A control format for an instrument may then consist of a number of unrelated controls or a number of voltage transformations derived from a single source. A control may be transformed by means of *attenuation, multiplication, integration, interpolation,* or *inversison.* Detailed explanation of the processes will be covered as the various applications are discussed. The following definitions will provide sufficient information to make basic control voltage generation meaningful.

Attenuation

Just as an amplifier can attenuate a signal (see page 23), a control voltage may also be lessened in strength. For example, three one-volt steps usually result in three one-octave skips when applied to an unattenuated VCO. Most voltage controlled circuits have front panel control voltage *attenuators, attenuating input* or *processing inputs.* By applying a voltage to an attenuating input, the incoming control can be compressed to any desired voltage range. In figure 5.6 the original three one-volt steps are attenuated by 50% to produce three ½-volt steps, each in turn producing a skip of an augmented fourth. Note that the voltage ratios do not change, only their composite range. It should also be emphasized that input attenuation has no effect on the source of the control. The voltages are produced at full value, and the attenuation takes place beyond this point of generation.

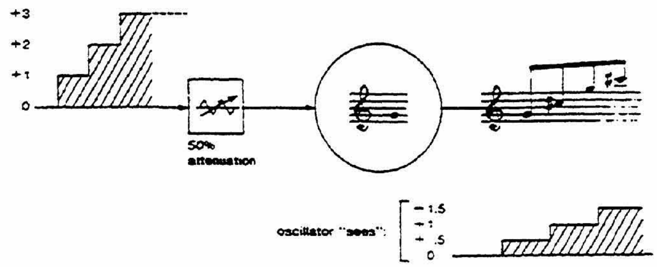

Figure 5.6. Control voltage attenuation

The majority of the EMS instruments, such as the Synthi AKS, are based on control voltage *output attenuation.* The magnitude of a control voltage is determined at the source of the voltage; and it is not possible to attenuate controls separately for every parameter. This imposes limits on instrument structuring but, as with any instrument, if the user is aware of the design, he can use it successfully.

Some instrumentation has two kinds of control inputs, "fixed" and "attenuated." In the case of VCOs, the fixed input is usually referenced to one volt per octave and cannot easily be changed. This obviously is convenient for standard tuning. Other inputs may have variable front panel attenuators so that the control voltage can be tailored to other needs. Some manufacturers have designed instrumentation so that when the attenuator or processing pot is at maximum, the VCO, filter or whatever will respond to one volt per octave.

Control voltage attenuation can also be accomplished by separate *control voltage processors,* and in some instruments by *AC/DC coupled mixers or amplifiers.* Unlike a dedicated audio mixer, this type of mixer can accept and mix control voltages as well as audio signals. The Moog 984 Mixer is an example of such an instrument. A control may be taken into any available input, then freely attenuated and mixed with other incoming controls. The final composite signal then appears at the output. If only a single control is taken, the module can be used just for attenuation as determined by the input pot. This is basically the same sort of circuit used within a module to mix manually the internal offset with an incoming control. Both the manual offset and the external control have to be mixed or *summed* before being applied to the controlled parameter. Coupled mixers such as the Moog 984 Mixer and the Eu 2010 Amplifier make this process possible by means of external modules. Unless such a mixer provides some gain, expansion of a control voltage will be impossible. A gain of 2 would mean that an incoming 2 volts would possibly be expanded to 4 volts, 3 volts to 6, and so on.

Putting these concepts into acoustic instrument analogies is a bit challenging, but it may be pedagogically useful. Consider a guitar string in analogy to a VCO. The tension of a string could be considered the offset, tuned to a specific pitch. The player's fingers, as they are placed on the strings, are analogous to control voltages. Beginning with the index finger, each successively higher finger produces a higher pitch. Changing the tuning of the string would constitute a change in offset, with the controls still having the same effect. Modification of the fret placement—for example, placing them closer together—would represent the process of control attenuation, resulting in the production of smaller intervals.

Inversion

Investigating the process of *inversion,* one has to understand the nature of the control voltages for each instrument. Some instrument designs use a control range operating on both sides of 0 volts—positive and negative control. Other instruments restrict the control to the positive side of 0 only. In each case the process of inversion is slightly different. In the case of positive and negative control, inversison would be an inverse value around 0 (figure 5.7A). A positive voltage inverted is simply a similar negative value. In terms of application, suppose that a control raises the pitch of an oscillator one octave; if that voltage were inverted it would then lower the pitch one octave (figure 5.7B).

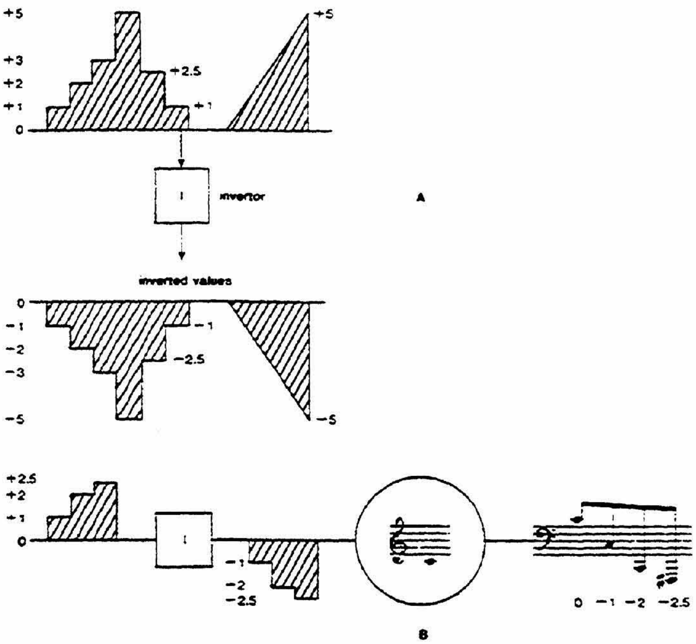

Figure 5.7. Inversion of positive/negative controls

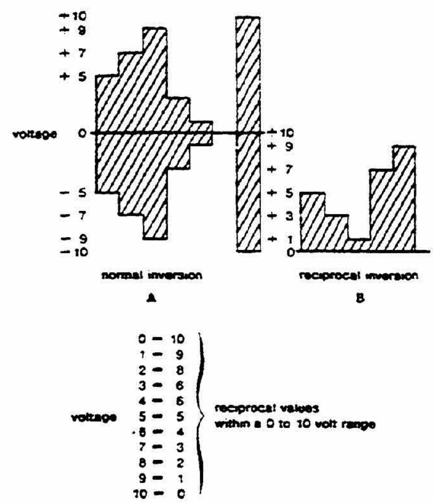

Figure 5.8. Voltage inversion of one side of zero (reciprocal inversion)

If the instrument's control range is only positive voltage, inversion must be thought of in a different way. If the controls are only positive it would be impossible to take a parameter below its offset value. The lowest value a control could have is 0 volts, which will have no effect on the controlled parameter. How then does one invert a control that never goes below 0? Figure 5.8 illustrates inversion in relation to 0, as in the earlier example: +5 becomes −5, +7 becomes −7, and so on. Instead of looking at this as a −10 to +10 volt range, consider it to be simply a total range of 20 volts. Now by moving the 0 volt reference line to the point of lowest voltage (figure 5.8B), we observe that what was +5 is still +5, +7 is +3, etc. What has happened is that 0 volts has been established as the lowest value, and all controls are on the positive side of 0. Inversion now becomes a process of reciprocal values within the total control range. The inversion of a value is arrived at by subtracting that value from the total available range. Within a 10-volt operating range, the inversion of 5 is still 5, the inversion of 7 is 3, the inversion of 9 is 1, etc. Reciprocal inversion could possibly be explained more simply; but showing its relationship to positive-negative inversion as merely a re-establishment of the lowest voltage value will be important to a conceptual understanding of all electronic instruments.

Now comes the question—why invert? Why would someone wish to control something upside down? Consider a left-handed guitarist having to learn from scratch on a right-handed guitar. While there is no real problem with the coordination, all the books are upside down. Admittedly a simple example, but it makes the point about accommodating various inputs to an instrument. There is no acoustic law which states that highest notes on a keyboard have to be on the right. After all, on an accordian the highest notes are down! This problem also relates to more complex instrument structuring. Consider a case in which two oscillators are to produce mirror scales of each other. For one VCO you would need an ascending series of voltages and for the other VCO a descending series of voltages. Instead of using two separate control sources, why not use one source driving VCO 1 directly and at the same time invert another leg of the same voltage to drive VCO 2 (see figure 5.9A)? Assuming that the controls regulate fixed voltage inputs, the only tuning required is the offset. The complexity of control is simplified and performance deals with only one control source, not two.

Another example of the use of inverted control is illustrated in Figure 5.9B. This deals with more complex parametric correlation, but is certainly worth thinking about at this point. The task is to generate a specific pitch-timbre relationship in which all high pitches have simple timbres and lower pitches have proportionally richer timbres. Simply use the inverted form of the voltages driving the oscillator to control a low-pass filter. A high voltage produces a high pitch, and simultaneously, its inverted form, a low voltage, establishes a low filter cut-off frequency, removing the desired amount of harmonics.

Integration

Certain control devices such as keyboards and sequencers (see pages 45 and 70) can produce either manually activated or pre-programmed voltage steps, as in figure 5.10. If applied to a VCO, the result is a

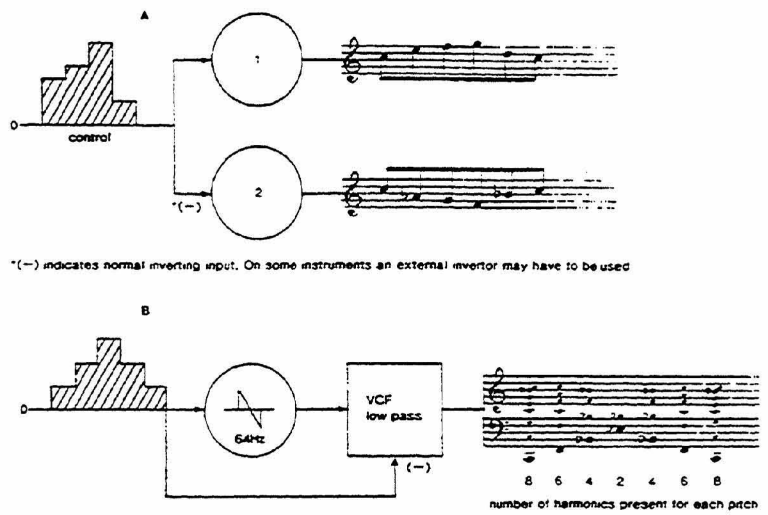

Figure 5.9. Inversion applications

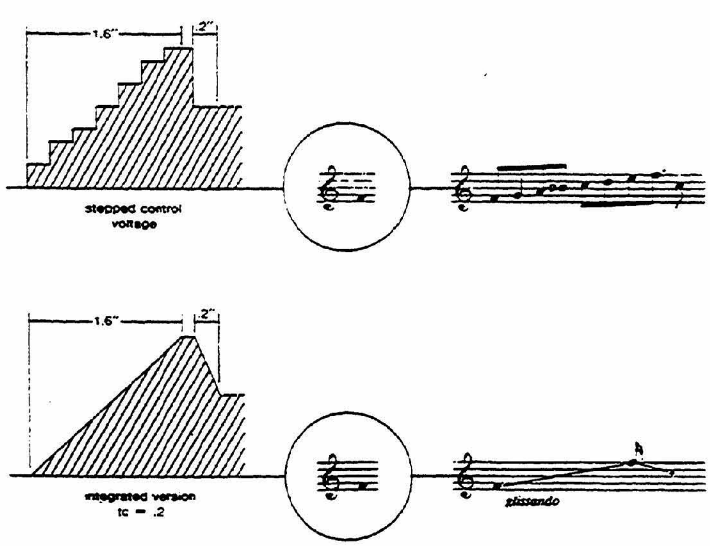

Figure 5.10. Integration

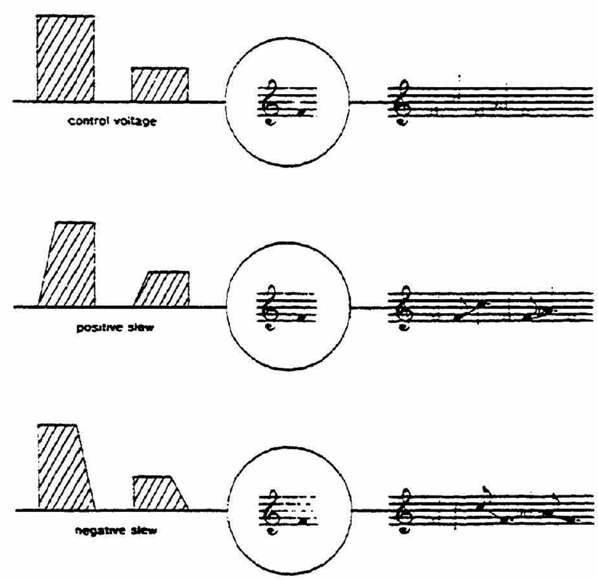

Figure 5.11. Positive and negative slew

series of discrete pitches. The process of *integration* is comparable to a portamento or glissando between and through the pitches. The time it takes to integrate two voltage levels is called the "time constant." A t_c of .2 means that it would take .2 seconds for a voltage to integrate or slope from its previous value to a new value. The portamento control on an electronic keyboard is a time constant pot which sets the portamento rate. Some other control sources have integration possibilities built into the instruments, while other instrumentation provides integration possibilities by means of a separate module.

Other terms for integration are *lag* and *slew*. These terms actually describe specialized integration functions. A "slew" can be either positive or negative. Serge System instruments provide modules dedicated to either positive or negative integration and are called the Dual Negative Slew and Dual Positive Slew (*dual* meaning that it can process two independent voltages). The negative slew will integrate between descending voltage levels only (see figure 5.11).

A Lag Processor, as on the ARP 2600, is usually associated with a device called an envelope detector (see page 53), which is used to convert an incoming audio signal into a control voltage. Acoustically generated sounds have very complex waveshapes and are usually too transient, with very rapid fluctuations, to be used as controls. The lag is essentially a negative slew that slopes off the descending portions of the waveshape. More will be said about integration functions associated with envelope detectors on page 53.

Some integration slopes are linear and some are logarithmic,—linear meaning that the rate of voltage change is constant, and exponential meaning that the closer the voltage gets to the next value the slower it changes. If your available instrument provides both possibilities, use your ear to determine your preference for each controlled parameter. If the instrument has only one slope, don't worry about it—the difference is usually very subtle. It may, however, be useful to realize that with exponential curves the final value is never reached within the slope. At some point the slope is broken and the final value is latched onto, actually breaking the integration function as the slope approaches the final value. However, this latching is almost inaudible. I suppose someone could make a case for linear integration, with the full transition heard since the rate change is constant, but . . .!

Examples of acoustic counterparts of integration are evident, but some thought might be given to conventional music terms for various integrated parameters:

Integrated pitch	=	glissando or portamento
Integrated dynamics	=	crescendo and diminuendo
Integrated tempo	=	accelerando and ritardando

Quantization

Quantization is the opposite of integration: it takes a continuously variable voltage and divides it into ongoing discrete steps or values. Modules such as envelope generators or random voltage sources (low frequency noise) produce continuously variable voltages. Figure 5.12 illustrates a voltage sloping from 0 to 10 volts. If one quantized this slope into five equidistant values, it would produce a sequence of 0, 2.5, 5, 7.5, and 10 volts. Slopes always quantize to the nearest pre-determined quantization value. If the 10 volt range is to be quantized into 5 equal steps, it would first produce 0 volts (step 1); then as the slope rises past 1.25 volts, halfway to the next quantized value, the output would switch to 2.5 volts. The output would remain at 2.5 volts until the slope reached 3.75 volts (halfway between 2.5 and the next value, 5) and at that point switch to 5 volts, and so on. This process is not to be confused with sample/hold techniques (see page 80), since quantized values are usually fixed by the instrument or pre-determined by the performer.

The string bass and bass guitar provide excellent analogies of continuous and quantized functions. The string of a standard concert bass is capable of infinite pitch selection, and the performer can slide or glissando between any interval within the range of a single string. The standard electric bass guitar, however, is quantized into equal tempered half-steps, so that all the performer must do is come close, making sure he places a finger behind each fret or integration value. Harry Partch's Adapted Guitar relocates the frets so that the guitar integrates at different values, with the player generating his own intonation requirements.

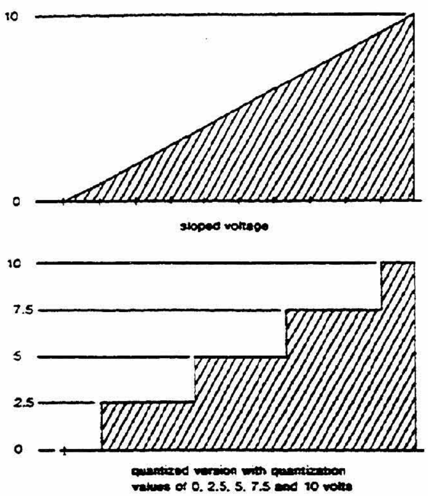

Figure 5.12. Quantization

Each interval quantization is often built into programmable voltage sources such as the EML 400 Sequencer and the Buchla 248 Multiple Arbitrary Function Generator. With the increasing use of digital control of analog instruments, user-determined quantization can be of immense value in the exploration of non-tempered scales.

Multiplication

This is not easy to describe, since it is difficult to find a simple acoustic analogy. *Voltage multiplication* is a process whereby one value (a voltage level) is determined by another value (a second voltage level). If a series of voltages—0, 2, 4, 6, 8, 10—were applied to one input of a multiplier, the output voltage would be dependent on the voltage level at the other input. For example, assume that the multiplier is 5 volts. Since the total voltage range of the system is 10 volts, 5 represents a multiplicand of .5, one-half the total range. In this case the output series would be 0, 1, 2, 3, 4, 5 volts (figure 5.13A). If the multiplicand were 7 volts (figure 5.13B). Things get a bit more complex if the multiplicand is dynamic. For instance, suppose the multiplicand switched from 1 to 5 to 10 volts. This would represent values of .1, .5, and 1. If the multiplicand changed each time the series began at 0, the output would be 0, .2, .4, .6, .8, 1, 0, 1, 1, 2, 3, 4, 5, 0, 2, 4, 6, 8, 10 (figure 5.13C).

As mentioned earlier, such product functions are not so apparent in acoustic devices, especially where both variables are performer determined. One such example might be the "Jaw's Harp." The loudness is a product of the amplitude of the vibrating metal strip and the resonance of the performer's mouth. In the open air the instrument is barely audible, and a resonant space is useless without a vibrating source. When combined, however, they produce loudness functions which can be controlled by either variable, one determining the other.

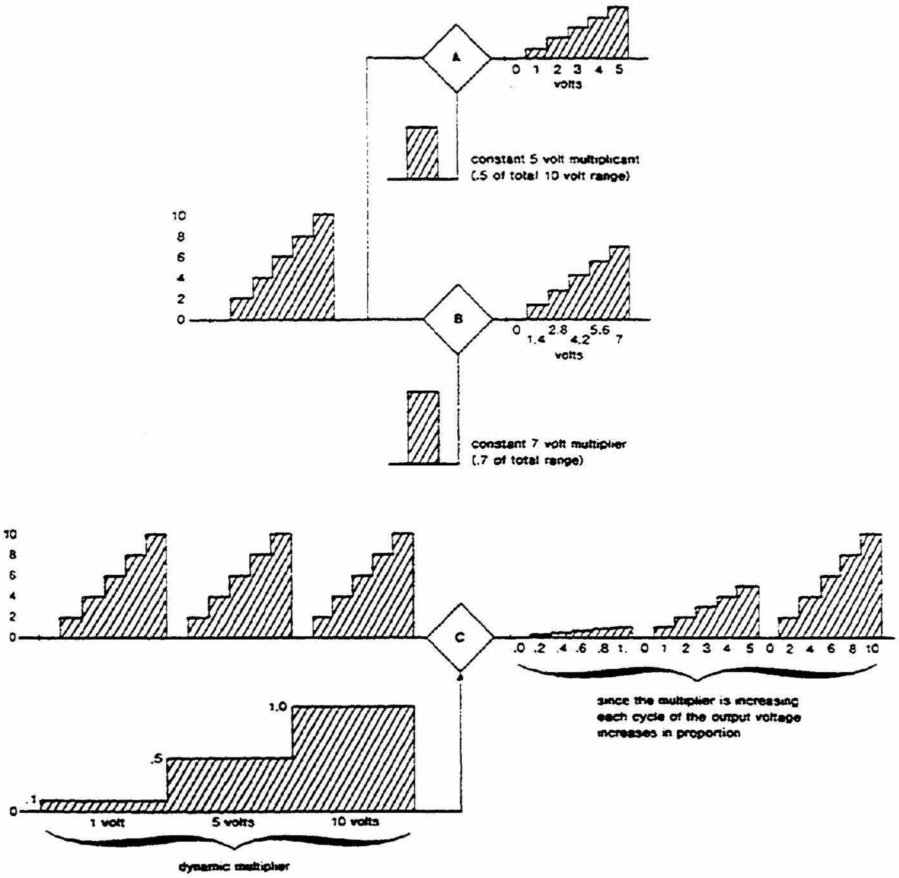

Figure 5.13. Multiplication

Control voltage multiplication is also possible with an AC/DC coupled VCA,—one which can attenuate a control voltage by means of another incoming control. With the offset at 0, the value of the VCA output voltage is the product of the input voltage (in this case a control) and the applied control voltage. The Moog 902 Voltage Controlled Amplifier is capable of this process, with the added capability of inverted or normal outputs (see figure 5.14). There are some other techniques which may be used to simulate multiplication, and these will be pointed out in applicable situations.

Now, what does a musician do with this plethora of information? It is through the processing of controls that the performer or composer determines the complexity of responses from his instrument. Consider a situation in which some traditional performance controls could be sensed and transformed into analogous control voltages. These controls could be processed in various ways, then redistributed to different parameters of an electronic instrument. Suppose, for example, a string player producing the event notated in figure 5.15A, a repetitive D major scale with a crescendo and diminuendo; with suitable instrumentation the pitch and loudness activity could be turned into usable voltages. A Pitch-to-Voltage Converter (see page 55) would transform the strings' frequencies into

Figure 5.14. Moog 902 VCA

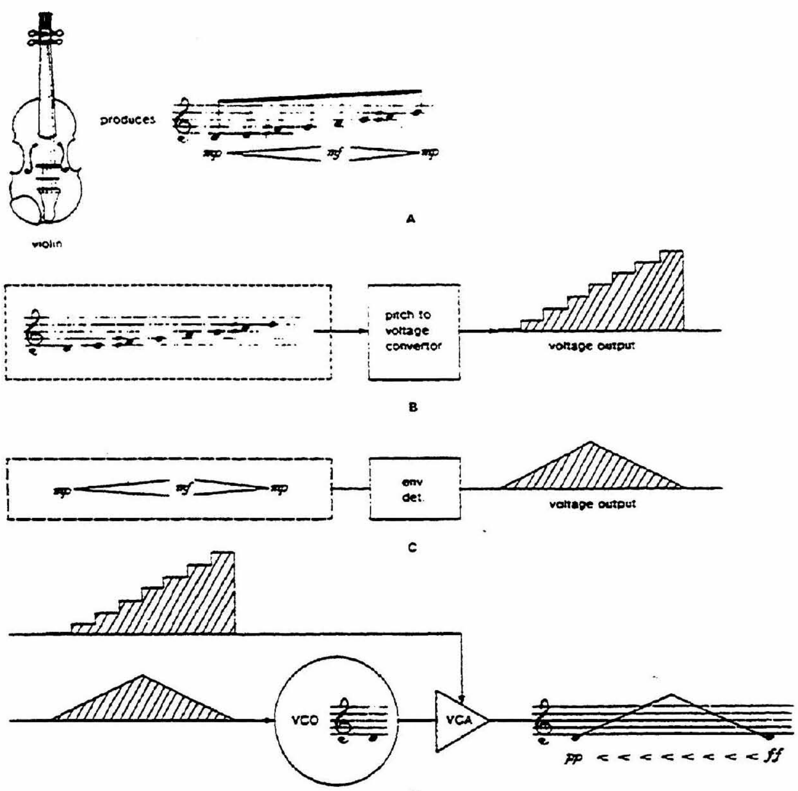

Figure 5.15. Parametric transfer

a series of voltages. Assuming a 1 volt/octave conversion with the lowest voltage being 0, the output would be a series as shown in figure 5.15B. The loudness variation could be sensed by an envelope detector (see page 53) and its output voltage would be as illustrated in figure 5.15C. Two obvious inputs have been extracted from the performer and transformed into independent controls. Now let's put the instrument back together in a new way. We could simply reverse the controls: the rising and falling voltage originated by bow pressure would cause a rising and falling pitch, and the discrete voltage steps caused by finger placement would produce sudden changes in loudness (figure 5.15D).

Now let's complicate things and add some control processing. In figure 5.16 the original pitch is multiplied by .5 (5 volts, assuming a 10 volt range) and the loudness contour is inverted. Redistributed to the instrument, the voltage sequence for the pitches would be one half the original values, producing a 8-note quarter-tone scale, and the loudness contour would be a diminuendo followed by a crescendo. Needless to say, one could incorporate quantizers, attenuators, more multipliers, and other elements to complicate the examples. If you want to attempt it, try the exercises 1 and 3 at the end of chapter 6, and let your imagination run free. This is the heart of dealing with electronic instruments, and if you can come up with the ideas, they can probably be implemented.

Applications

This chapter has been largely conceptual and mentions a very limited number of specific instruments. Consequently, it would not be practical to suggest any hardware-oriented projects at this point. Nevertheless, due to the importance of voltage control concepts to the electronic media it is strongly urged that the reader spend a day or two considering some ideas before going on to chapter 6. The next chapter contains what are perhaps the most important pages in this text, and it is based on the reader's grasp on voltage control concepts.

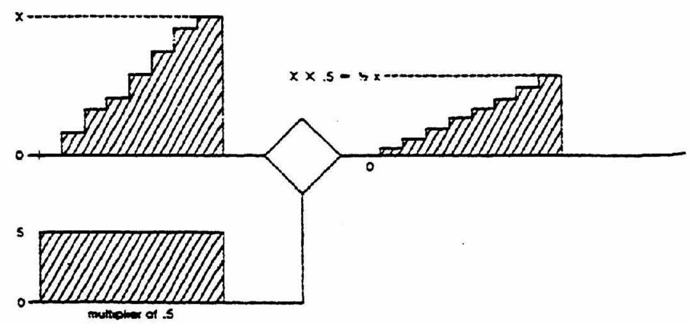

Figure 5.16. Parametric transfer and processing

It is suggested that one use the following situation as a basis for some self-constructed exercises, considerations, and possible group or class discussions.

Theorom 1: **Anything which can be measured can be translated into an analogous voltage.**

Theorom 2: **Voltages may be changed or processed by:**

A. Addition to another voltager
B. Subtraction by another voltage
C. Inversion
D. Integration
E. Quantization
F. Multiplication by another voltage

Theorom 3: **In an ideal situation within the electronic media, any desired musical parameter may be determined and controlled by any voltage.**

Theorom 4: **Given theoroms** 1, 2 and 3, **you are free to create as you wish!**

This is, of course, what every composer or performer dreams of doing. However, used as a basis for various hypothetical constructions, this goes to the heart of the subject at hand: conceptualizing the relationships between control and resulting sound.

This exercise is to take any imaginable situation and isolate some variables within that situation. Once the variables have been defined, assign their units of measurement to a voltage range. It is suggested that you check your instrument manual and work within those voltage boundaries. In this way you can begin to think in terms of a specific instrument (the example given below will be based on a ± 10 volt range). Since measurements can be translated into precise voltages one can have any measured action control various modules of an electronic instrument. The best place to begin is in terms of the "basic patch" explained in chapter 4.

Example: *A Sonic Weather Machine*

The measurable variables:

A—air temperature
B—wind speed
C—humidity

Corresponding voltages: (subjective assignments)

A—temperature: each 10 degrees Fahrenheit will equal 1/2 of a volt.
B—speed: each 1 mile-per-hour measurement will equal .1 volt.
C—humidity: every 5% humidity will equal 1 volt.

Voltage assignments: It is here that one decides what voltage activity will control each part of the basic patch.

A—air temperature controls the VCO. Each 10° F. equal 1/12 volt. Assuming that the VCO operates on a 1 volt/octave range, each degree will change the VCO by ½ step.
B—air speed controls the VCF (Voltage Controlled Low Pass Filter). Assuming a 1 volt/octave range, each mph change will move the filter cut-off one octave.
C—humidity controls the VCA. Every 5% humidity will change the gain 10%.

Take special note of the offsets; they should be indicated in each patch.

The VCO is a sawtooth wave so there is a rich spectrum to filter. The frequency is offset to 128 Hz (C).

The VCF is offset to the fundamental pitch of the VCO.

The VCA is offset to a gain of .5 (control of 50%) so the humidity variations can potentially create crescendi and diminuendi.

°°°°° GO BACK AND READ THIS EXERCISE AGAIN SO IT IS WELL UNDERSTOOD UP TO THIS POINT °°°°°

Conditions: It is a calm and stable day.

Temperature = 70° F = .7 volts
Air Speed = 2 mph = 2 volts
Humidity = 5% = 1 volt

Results:

Pitch would be a perfect 5th higher (7 half-steps)
Filter cut-off would be 2 octaves higher (512 Hz)
Amplitude would be increased slightly

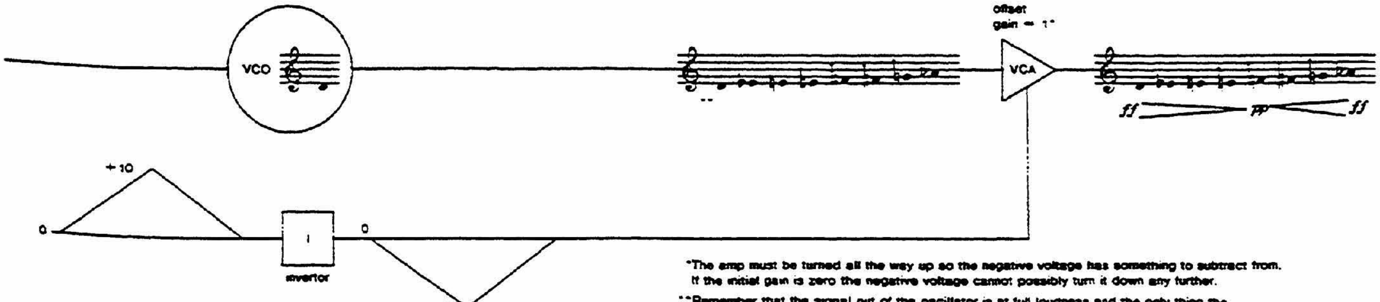

*The amp must be turned all the way up so the negative voltage has something to subtract from. If the initial gain is zero the negative voltage cannot possibly turn it down any further.

**Remember that the signal out of the oscillator is at full loudness and the only thing the amplifier can do to it is to turn it down!

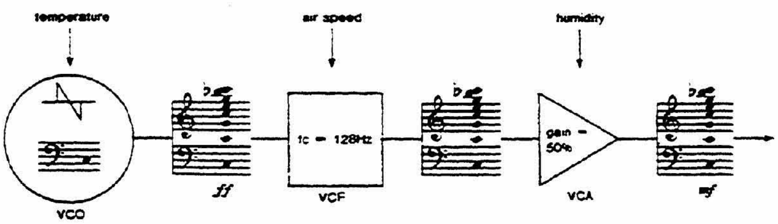

Figure 5.17. Sonic wind machine

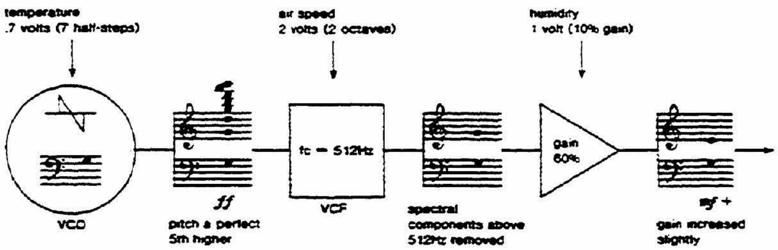

Figure 5.18. Sonic weather machine with applied controls

Problem 1: What happens is the temperature *suddenly* drops 20° and, air speed increases 1 mph and, humidity increases 20%?

Problem 2: What sonic result would take place if the above changes took place steadily over a one minute period?

Problem 3: How could you cause the pitch to *rise* in response to a *falling* temperature?

Problem 4: What would be the result if the VCA and VCO controls were interchanged?

Problem 5: After the change described in problem 4, how would you get a smoothly changing humidity to result in discreet pitch changes?

Problem 6: Using only the basic patch, invent some new situations for controls and assign them to the instrument in various ways. Be sure to consider relationships and offsets for each control. If this seems too easy, try processing the voltages and dealing with two or three basic patches at one time.

6 Control Voltage Sources

Control voltage sources are the basic organs of contemporary instruments. The possibilities of control processing were introduced before discussing individual control voltage generators, so that here it will be possible to discuss control sources in a more contextual relationship to their applications. This chapter will introduce a variety of control generators and make some suggestions concerning obvious and perhaps not so obvious applications by the musician.

In most instances of recorded electronic music, the composer fills a dual role of creator and performer. In the older studios of Europe, it was a common practice for the composer to realize his work through the aid of an engineer; he would seldom come in direct contact with the equipment. But due to simplified methods and design, along with the contemporary composer's increasing knowledge of electronic methods and an instinctive curiosity about the internal workings of his art, the electronic music composer today holds a tighter rein on the compositional processes. One of the major appeals of electronic music is that if offers the composer an opportunity to come into direct contact with the various parameters in which he is interested. Some composers appreciate this because of the unrestricted control it affords; others value it because of the actual kinesthetic sensations involved, much as in the act of painting or sculpting.

There is an endless number of kinds of voltage sources which the composer may use; and every studio may have its own particular version of a basic type that has been built or modified to meet a specific need. This chapter will discuss the basic resources of control sources and some of the more common refinements and modifications found on much of the equipment which is commercially available. There will be no attempt to present any particular design in its entirety, and all of the discussed refinements and modifications are usually not found on any one system. There are so many individual variations in design that complete coverage would amount to a detailed description of every electronic studio in the world.

For purposes of lucid and coherent discussion, this overview will be divided into two sections. The first will deal with kinesthetic sources, that is, those in which the generated voltage is the result of some direct and discrete action by the performer, such as with various types of keyboards, pitch-to-voltage converters, joysticks, and such. The second section will concentrate on programmed controllers; in this case a voltage function is pre-set by the instrument or by the performer and called into action as needed. In some instances this categorization is not clear because of a complexity of inputting possibilities. In these situations the modules will be dealt with at a point that seems most logical.

Kinesthetic Control Voltage Sources

Keyboards

The most popular, but not necessarily most useful, source of control voltage is the voltage keyboard or keyboard controller. This is essentially a multiple voltage source that will produce a different instantaneous voltage for each key activated. The keyboard may be similar to an organ keyboard, or it may be a series of metal plates (commonly known as capacitance plates or a "touch keyboard") which are touched by the performer. The similarity to an organ or piano keyboard is often confusing because the voltage keyboard need not necessarily change pitch. It produces voltages which may be used to control pitch as well as amplitude, timbre, or any other desired parameter. Ideally, each individual key would have the capability of producing its own voltage independent of the other keys. This may be achieved by each key having its own voltage pot which could be manually set. Because it has individual controls, the keyboard is not limited to having any particular voltage sequence; going from left to right would not necessarily mean higher voltages. By depressing the individual keys, the performer would effect a change to the preset voltage of that particular key.

Note that in figure 6.1 there is only one main output for the voltage. The basic voltage keyboards are "monophonic," since they will produce only one voltage at a time, that is, if controlling an oscillator with them, the player would produce only one pitch at a time. The output may be divided to control any number of modules, but each module would receive the same voltage. Some keyboards will produce the preset voltage only while that particular key is depressed.

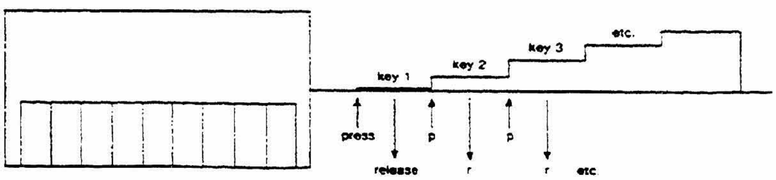

"HOLD" Keyboard—once a key is touched the resulting voltage remains at the output. This is the most common design.

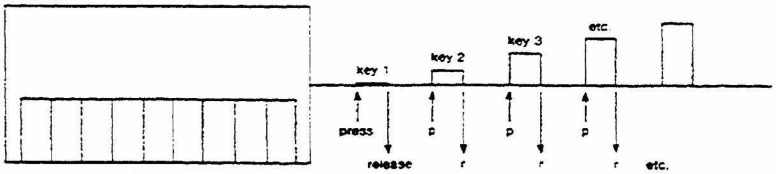

"NO-HOLD" Keyboard—once a key is touched the appropriate voltage appears at the output. When the key is released the voltage output returns to 0 volts.

Figure 6.1. Basic voltage keyboard

This is often referred to as a "hold-no hold" function; certain designs of keyboards will function in either mode, selected either by a "hold-no hold" switch or by separate "hold-no hold" outputs.

Over the years there has been much discussion, arguments, and design variations relating to polyphonic systems. My own opinion is that the synthesizer is, at least as of this writing, essentially not a polyphonic device. There are indeed many types of "polyphonic" keyboards and dedicated "polyphonic" electronic instruments. What the performer gains in polyphonic capabilities from a single control source, one usually loses in user-implemented design possibilities. I find great difficulty in trying to remember which type of polyphonic keyboard has low or high note priority, which portions of the keyboard go to what module, and become quite confused amid the "sometimes, always, never, continuous, reset, reassign" operations. Manufacturers of polyphonic keyboards supply the user with all necessary operation information, and therefore I will leave such descriptions to the user manuals. It would hopelessly confuse the reader if in a single text one attempted to cover all possible keyboard operations. I will deal only with the monophonic voltage keyboard; a thorough knowledge of this type of controller will facilitate the understanding of polyphonic systems, and all of the information will be readily transferable.

Computer-aided polyphonic performance is really a different situation. In this case the performer can program a series of parallel functions. But now we are talking about computers and micro-processors, rather than manually operated keyboards. The state-of-the-art system is a *multiphonic* instrument capable of a myriad of interesting sounds and structures. Our own physical resources of ten fingers would place a severe limitation on the control and implementation of these structures if they were only accessible through *direct* control of a keyboard. Perhaps this statement

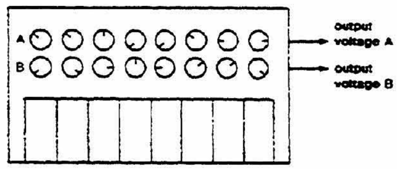

Figure 6.2. Two voltage homophonic keyboard

may offend some manufacturers and a sufficient number of musicians. This, of course, is not my intent. I am only saying that the concept of polyphony cannot be limited to what is available from pianos and organs. An orchestra is also a polyphonic instrument, we know how many hands it uses. A seasoned performer with access to a large studio system still could not create that same level of structural complexity in real time if he were limited to a keyboard, no matter how polyphonic it may be. He can, however, *preprogram* functions and timbres to react to a keyboard, a computer or the cycling of the moon; and I prefer this concept of polyphony to my limitations with a keyboard.

Figure 6.2 is a type of "homophonic" keyboard. With this particular design, each key is able to produce two independent preset voltages. The top row of pots are preset and the voltage is taken from output A. The lower row of pots are also preset and their output voltage is taken from output B. It is thus possible to have any single key produce two independent voltages which may be used to control two independent modules.

In certain instances it may be very useful to have a third independent output with its own set of control pots. Each output would also have a set of corresponding pots for the presetting of each key, and each separate voltage output could then be used to control any voltage-controlled module in the system.

A more common keyboard design is the voltage divider format which divides a control voltage range into equal steps, resulting in fixed equal division of pitches. This keyboard design achieves voltage regulation by

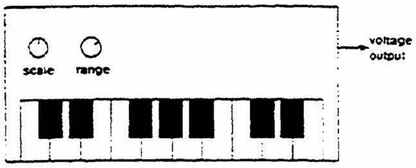

Figure 6.3. Typical monophonic keyboard

using only two pots: "range" and "scale" (see figure 6.3). The range pot determines the total amount of voltage the keyboard will produce. If the keyboard is being used to control the frequency of an oscillator, and the range pot is at a maximum, the pitch difference between the two extreme ends of the keyboard may be as much as 15 octaves, depending on the particular design. If the range pot is at a minimum setting, the total range of the keyboard could be as small as one-half step. If the keyboard had 40 keys, then there would be a possibility of having 40 different pitches between any two adjacent half-steps. The relationship between the individual voltages is controlled by the scale pot. This control allows for fine tuning of the voltages so that it is possible to achieve various types of scalar relationships of the controlled parameter. To facilitate performance of traditional 12-tone equal temperament music, the smaller performance systems such as the ARP Odyssey, the Cat, and others have the keyboard pre-tuned to standard intervals. Certain keyboard designs make use of a keyboard programmer. This is a memory circuit which can be instantaneously switched in to provide various pre-programmed tunings. It should be recalled that very fine and subtle control of all of the parameters is just as important as the fine control of pitch, and that the keyboard should not be approached as strictly a frequency controlling device.

Since the typical monophonic keyboard can only produce one output voltage at a time, what happens if two or more keys are depressed simultaneously? Most mechanical keyboards are of the voltage divided genre which have *low-key* priority. If a high key is held down, as soon as a lower key is depressed the voltage output will be that of the lower key, even if the higher key is still held. This can be used to articulate wide interval shakes or trills by holding down a high key and rapidly depressing and releasing a low key. Other keyboards incorporate *last-key* priority. It is virtually impossible to touch two or more keys at exactly the same time, and the voltage output is that of the last key, no matter how minute the time interval. Dual output keyboards function in various ways. With two voltage outputs, one output usually corresponds to the highest key and the other to the lowest key. Such features as dual voltage output can be put to some interesting uses by using the main voltage to control a VCO and the second voltage to control another parameter such as a filter. In this way the top "voice" controls pitch and the lower "voice" controls timbre.

The voltage output from a keyboard may be hard-wire connected to an oscillator (meaning that the user cannot disconnect it), connected and disconnected by means of a switch, or may call for user patching by means of cables, plugs, etc. When using the keyboard to control an oscillator, one still must determine the VCO's offset. This means that when you first approach the instrument, a C on the keyboard may not necessarily produce a C on the VCO. A logical tuning procedure is to touch the lowest key, meaning that the control voltage is at its lowest value, usually 0 volts.[1] Making sure that the keyboard is connected to the VCO, adjust the offset to any desired reference pitch. If for some reason you are asked to play a B♭ horn part (written in B♭), tune the VCO offset to produce B♭ (in the correct octave) while the C key on the keyboard is activated.

Some keyboards have the availability of *pre-set references*. Additional keys can add additional voltage to the keyboard output to transpose it by octaves, fifths, or any desired interval. Figure 6.4A illustrates this process. Three extra keys with associated pots may be used to set three voltage levels of 0, 1, and 1.5. By touching pre-set 1 the output voltage, 0 volts, is added to the ongoing keyboard voltages, perhaps producing a repetitive triad. Zero plus whatever the keys are generating has no effect on the final keyboard output. Activating pre-set 2, however, adds 1 volt to each key voltage, making the final keyboard output one octave higher. The result would be an octave transposition of pitch. The third pre-set sums 1.5 volts with the keyboard voltages to make the transposition an octave plus an augmented fourth. This same result could be accomplished by either playing a compound augmented fourth higher on the keyboard or by re-setting the offset on the oscillator (either manually or by means of a second control voltage source). Preset keys or switches are useful for keyboards with a limited number of keys and place the transposition control in the immediate area of the generation of other pitch controls.

An alternate keyboard format favored by some players is the *matrix keyboard*. Similar to a calculator keyboard, it is usually in a 4 × 4 matrix with each key user-tunable to any desired control setting. Matrix keyboards are available with either touch-sensitive or mechanical action keys. The EML Manual Controller (see figure 6.5) is a 16-key matrix providing two independently tuned voltages for each key. The "sampled voltage" output is like most other keyboard

1. Sometimes the zero volt reference is in the middle of the keyboard, so that it generates positive and negative control

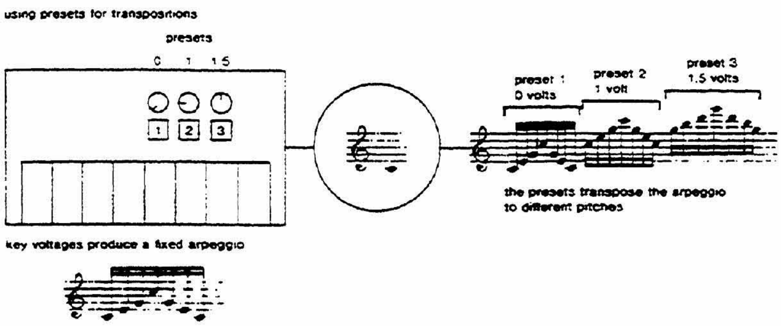

Figure 6.4. Keyboard presets

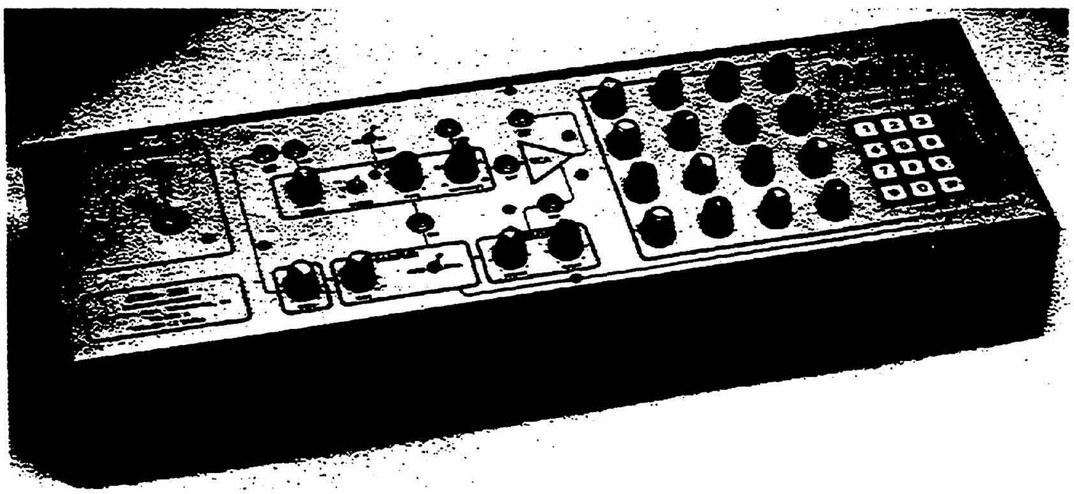

Figure 6.5. EML Manual Controller

control voltage outputs in that each key depression is memorized by the circuit and the output voltage will remain at that level until a new key is depressed. The "voltage" output, however, is a no-hold process in which the control instantly drops to zero as soon as the key is released. Some applications of homophonic keyboards were given earlier, but this no-hold function provides additional possibilities. The "sampled" output could be used to control a VCO, and the "voltage" output then could be used to control the amplitude of a VCA. Since each key has separate tunable voltage outputs, each pitch could be preprogrammed to a specific loudness. A possible advantage here is that as soon as the key is released, the "voltage" returns to zero, thus instantly turning down the VCA. In effect this produces rather crude "envelopes" but still is useful when you run out of envelope generators (see page 64). The real advantage of the matrix keyboard is in the relationships one can establish between performance gestures and tunings.

Tracking and Tuning. A format common to many instruments is to have the keyboard patched to a VCO and simultaneously to a Voltage Controlled Filter (VCF). With this patch one can offset pitch and filter cut-offs, and both will track in parallel (see figure 6.6A). Why do this? If, for example, a low pass filter is offset to 512 Hz, the frequency component above that cut-off will be attenuated. That means as the VCO produces pitches closer and closer to that cut-off they will contain less and less spectral components and the higher notes will have proportionally simpler timbres (figure 6.6B). If this is the desired effect, fine. If consistent timbres are desired, the filter cut-off must move higher as the pitch moves higher so that the filter attenuates at the same point relative to any given pitch fundamental. Figure 6.6C shows the VCO and VCF offset to where the filter cut-off is at the fourth harmonic. As a keyboard voltage is applied the pitch and filter cut-off move up in "unison" so that the cut-off is still at the fourth harmonic of any pitch. More likely than not the filter's control voltage attenuator will have to be adjusted in order to track with the oscillator. If you have tried this (and it works), don't stop with the obvious. Try different attenuation levels and see what you get. If you have the resources, invert or multiply the control to the filter.

Controlling two or more VCO's from the keyboard is also possible. The oscillators can be offset to any desired interval and, if correctly tuned in terms of the control, they will track at that interval. With fixed voltage inputs or hardwired keyboard connections the VCO tracking is no problem. If the control voltage attenua-

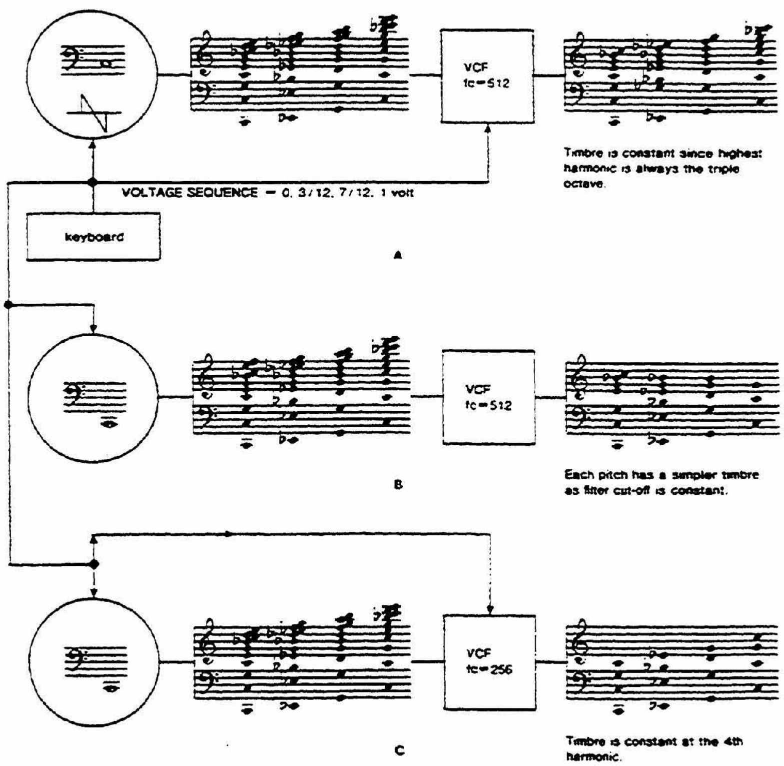

Figure 6.6. Tracking an oscillator and filter

tors are continuously variable, tuning the correct response with more than one VCO can be difficult. Let me suggest a method that may make it easier.

a. Patch all the VCO's into a mixer so they may all be heard together or individually. It will help if they all come out of the same speaker.
b. Connect the keyboard or any other control to each VCO in parallel (the same control going to each VCO simultaneously).
c. On the mixer, turn down all but one VCO and adjust its control voltage attenuator so that an octave on the keyboard sounds like an octave. When doing this, begin with the lowest available octave on the keyboard; then when satisfied, check the upper octaves. It will also help if the VCO's are all set to a harmonically rich waveshape such as square or sawtooth. Do this for all other VCO's, listening to each one individually.
d. Touch the lowest key on the keyboard (or the key corresponding to 0 volts) and turn up the gain for the second VCO.
e. You will now hear both VCO's, probably set at some absurd interval, so tune them to a unison. The rich waveshape will make it easier to hear the beats.
f. Touch the octave key and adjust the processing pot on VCO 2 so that it is in tune with the reference. Do not touch the reference VCO unless you are sure it has drifted or been changed. After the processing pot has been adjusted to produce a unison, touch the 0 volt key and readjust the offset of VCO 2, as it probably will have changed a bit.
g. Repeat this process for each oscillator. Now the VCO's can be offset to any intervals and should track exactly in tune.

Some VCO's have phase locking capabilities which will insure precise tracking. It has been my experience that the use of phase locking to correct intonation really makes a bank of oscillators sound like one VCO as you lose much of the phasing information inherent in so many interesting timbres. However, if this is what you want, by all means use it. Uses of phasing can be very effective with other techniques and if you have to waste phasing by keeping the VCO's in tune, something is probably out of adjustment on the VCO or the keyboard. (See figure 6.7a.)

Keep in mind that VCO's do not have to track in parallel. Try taking one leg of the control voltage through some various process such as inversion or slewing (see figure 6.7b).

Portamento. At times it may be desirable to have a gradual voltage change, as in figure 6.8. This gradual voltage change may be achieved on certain keyboards by using a "portamento" control. The word "portamento" must be understood in its literal sense (Italian—"to carry"), since the gradual change of voltage need not be applied to frequency. The portamento control setting will determine the time it takes for the voltage to change from one level to another. This rate may be

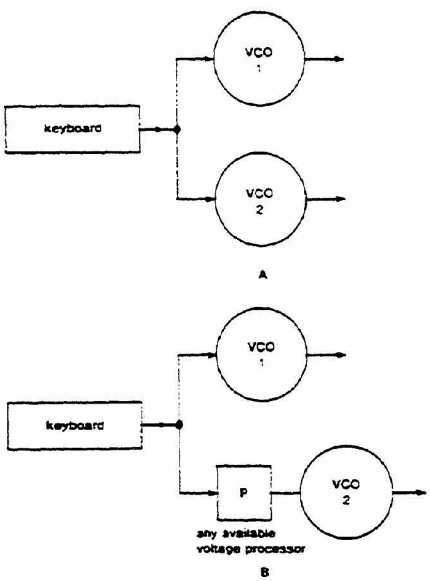

Figure 6.7. Tracking two VCOs

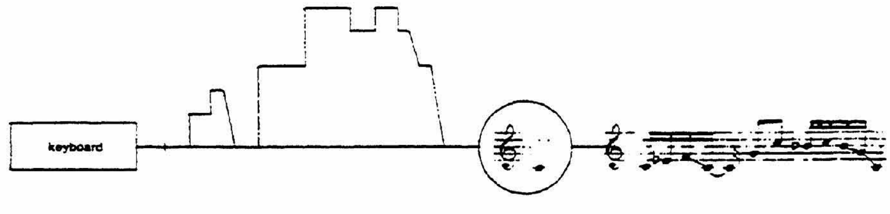

Figure 6.8. Keyboard portamento

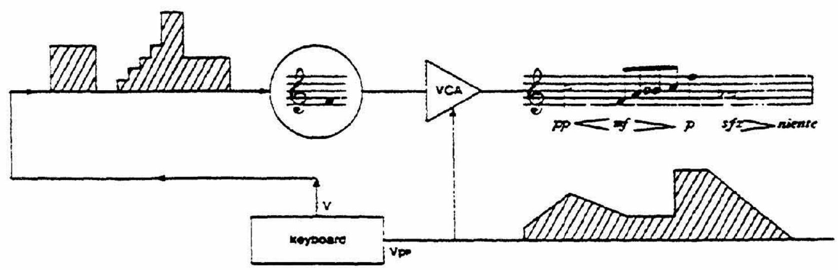

Figure 6.9. Pressure control

a few milliseconds or sometimes as long as 10 seconds. If two adjacent keys produced the voltages of 3 and 4 volts respectively, and the portamento control was set at 1 second, the utilization of the keys would produce a 1-second rate change from one voltage to the other. If the voltages were controlling an amplifier, the effect would be a 1 second crescendo or diminuendo.

If your keyboard does not have portamento capabilities, you might invest in an integrator. Just route the keyboard voltage through the integrator before attaching it to an oscillator and you have controllable portamento. If the integration rate is voltage controllable, you have all the added features.

Fluctuating Controls from a Keyboard. Another operating characteristic of many voltage keyboards is that the output voltage may be a function of the manual force applied to any individual key. Keyboards consisting of capacitance plates will produce voltages proportional to the applied finger pressure. This would be very useful if the keyboard has a separate output for the preset voltages and for voltages produced by finger pressure, since it would be possible to create various phrasings and accents by using the preset voltage to control frequency and using the finger-pressure voltage to control the amplitude of each frequency (figure 6.9). With this patching, the individual amplitudes, along with possible cresendi and diminuendi, would be a function of finger pressure, and pitch would be a function of keyboard voltages.

The use of pressure as a viable control requires a bit of practice but it is worth the time spent. Although the input is called pressure on touch keyboards, it is really a result of amount of skin contact. This is a correlative of finger pressure, but accurate performance requires that we really know what is going on. First, the standard "thumb under" keyboard usually doesn't work. This technique brings the thumbnail in contact with the touch plate and no voltage will be produced. Attach the pressure output to a VCF or VCO and try just rocking back and forth on a key. The key doesn't matter, as the voltage is not produced by key selection. With a VCO, see how accurate you can become in playing specific intervals. Process the voltage by attenuating it to workable levels. Some keyboards allow keyboard adjustment of pressure response so that it can really be tailored to your own touch. If you have the capability of voltage-controlled portamento, control the portamento rate with pressure. In this way, if a higher voltage decreases the portamento time (you may have to invert the voltage to get this correlation), the firmer you press a new key the faster you arrive at a new pitch. In this manner portamento rate can vary from pitch to pitch.

The Buchla 219 Kinesthetic Input Port is designed as an interfacing instrument for use between the performer and a microprocessor, or is able to control appropriate analog modules by direct front panel patching. Designed in a touch sensitive keyboard format, it offers still another dynamic input. In addition to the previously described touch sensitivity, it provides positive and negative controls proportional to lateral movement of the entire keyboard. It is so mounted that there is about 1/20 of an inch movement of the keyboard on its lateral axis. One can use these voltages, summed with the regular key voltages, to control the pitch of a VCO. In this way each key would produce a discrete pitch but it could be bent flat or sharp with lateral pressure. The pressure voltage could then be used to control some other dynamic parameter such as a filter.

Additional dynamic inputs provided by various keyboard designs include velocity and depth sensitivity. In the first case a control is produced proportional to how *fast* a key is depressed, and the latter capability produces a voltage proportional to how *far* a key is depressed. All of this implies an important point which the musician should always bear in mind. Acoustic events which have been useful as artistic tools are usually complex structures with several ongoing variables. If one approves of this direction (and some relevant composers often do not), the more inputting or interfacing capabilities one has with the instrument the better.

A device usually associated with the keyboard is the "ribbon controller" or the "linear controller." This is a tight band about 2 feet long that will produce a voltage proportional to where it is touched by the performer. The linear controller is usually equipped with a pot which will determine the total output voltage, similar to the range control on the keyboard. If the total output is 5 volts, and it is controlling an oscillator, it would be possible to produce a 5 octave glissando by sliding one's finger from one end of the ribbon to the other. An ascending glissando would be achieved by sliding from left to right, while the opposite action would produce a descending glissando. If the total output of the ribbon was set at 1 volt, the same physical action would produce only a 1 octave glissando. This device will produce the same effects as the portamento control on the keyboard. The basic differences are that the ribbon often has a smaller range, but the individual characteristics of the voltage sweeps can be more immediately controlled by the performer. An extended voltage range with the same length ribbon could result in a loss of performance accuracy. Some ribbon controllers are hardwired to add to the keyboard output, limiting it to association with whatever the keyboard happens to be controlling. Other ribbon controllers have undedicated outputs, and they may be used to control whatever the performer decides.

Timing Pulses. Still another application of the keyboard, independent of format, is the production of *triggers* and *gates* (both referred to as "timing pulses"). These terms often differ from manufacturer to manufacturer. As discussed earlier in this text, performing on an instrument often requires a single input to control a variety of activities. Assuming the keyboard is being used for pitch selection, you might also want other things to happen simultaneously. For example, the timbre and loudness might change according to some pre-programmed design, and at the same time the sound might spin around the room in various patterns. These are preprogrammed functions which the performer usually determines previously and accesses in various ways in modules like envelope generators (see page 64), sequencers (page 70), random voltage sources (page 83), etc. These functions then have to be called forth by some command. And it is usually desirable to call forth these commands simultaneously with other parametric changes which might be controlled by a keyboard.

These commands are called timing pulses. The terms "trigger" and "gate" are often used interchangeably but there is a distinction in what they do. First of all we should understand that a trigger and gate have manufacturer determined levels and that the same voltage level for each is produced for every key. Key 1 produces the same trigger and gate voltage as key 30. A trigger is a transient voltage that has a very fast rise and fall (see figure 6.13A). A trigger is used to cause something to happen, such as incrementing a sequencer (page 64), calling up a random voltage, or triggering an envelope generator to begin its attack (see page 70). Trigger voltages will vary from manufacturer to manufacturer, but they are usually high magnitude voltages. A gate always accompanies a trigger and is a sustaining voltage which allows something to continue to happen. The gate voltage may be the same magnitude as the trigger or may be a bit lower (see figure 6.13B). Each time a key is depressed it produces a trigger and a gate at the appropriate outputs. The trigger is transient and its length cannot be varied. The gate, however, will stay "on" or "high" for as long as the key is depressed. Upon release of the key the gate will immediately turn "off" or "low." This means that the trigger will activate some function and the gate will allow this function to continue until the key is released.

In some cases an instrument is so designed that a clear user distinction between trigger and gate is necessary. These systems will usually have separate trigger and gate outputs and inputs. Other systems tie triggers and gates together internally, and the responding module must distinguish between the two types of information and use them accordingly. More will be said about triggers and gates when discussing programmed control sources and other types of timing pulse sources.

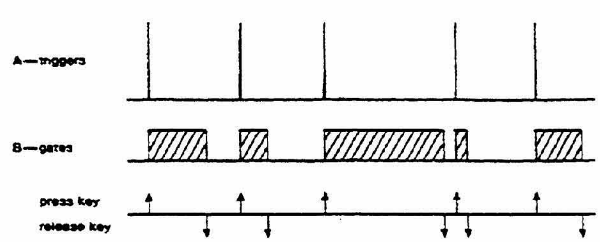

Figure 6.10. Triggers and gates

At this point the reader should realize that most kinds of timing pulses are not controls in the sense that they can be adjusted in voltage to cause different magnitudes of response. This does not mean that you should indiscriminately plug triggers and gates into just any input. If there is a danger in confusing timing pulses with controls, it will so state in the user's manual, or there will be a clear distinction with the type or color of plug used.

Joysticks

One of the cybernetic means of voltage production is the "joystick." A joystick consists of two or more potential voltage sources which are simultaneously controlled by a vertically-positioned lever. The two voltages are physically controlled at an angle of 90° to each other on an X-Y axis. Movements of the joystick from right to left would produce a relative change in voltage X, while movements of the stick toward or away from the body would produce relative changes in voltage Y. The advantage of the joystick is that it provides simultaneous but independent control of any two voltage-controllable parameters. If voltage X is being used to control amplitude and voltage Y is being used to control frequency, an endless number of amplitude-frequency relationships can be realized. Movement of the stick at a 90° angle in relation to the body will vary the frequency independent of amplitude, and a right-left movement of the stick will vary the amplitude independent of frequency. Moving the stick at an ascending angle would result in an abrupt change in frequency with a relatively slow change in amplitude (figure 6.11A). The opposite effect (abrupt change in amplitude with a relatively slow change in frequency) could be produced by moving the stick at a right angle (figure 6.11B). A circular rotation of the joystick would produce a continually varying change in the two parameters in constant opposite relationships (figure 6.11C).

Some joystick shafts are mounted on a vertically positioned pot to provide a Z axis voltage. The voltage is then proportional to the up-down movement of the stick. This Z axis voltage, of course, can be attached to any desired parameter. This may be combined with the previous patch to control a filter cut-off as illustrated in figure 6.11D.

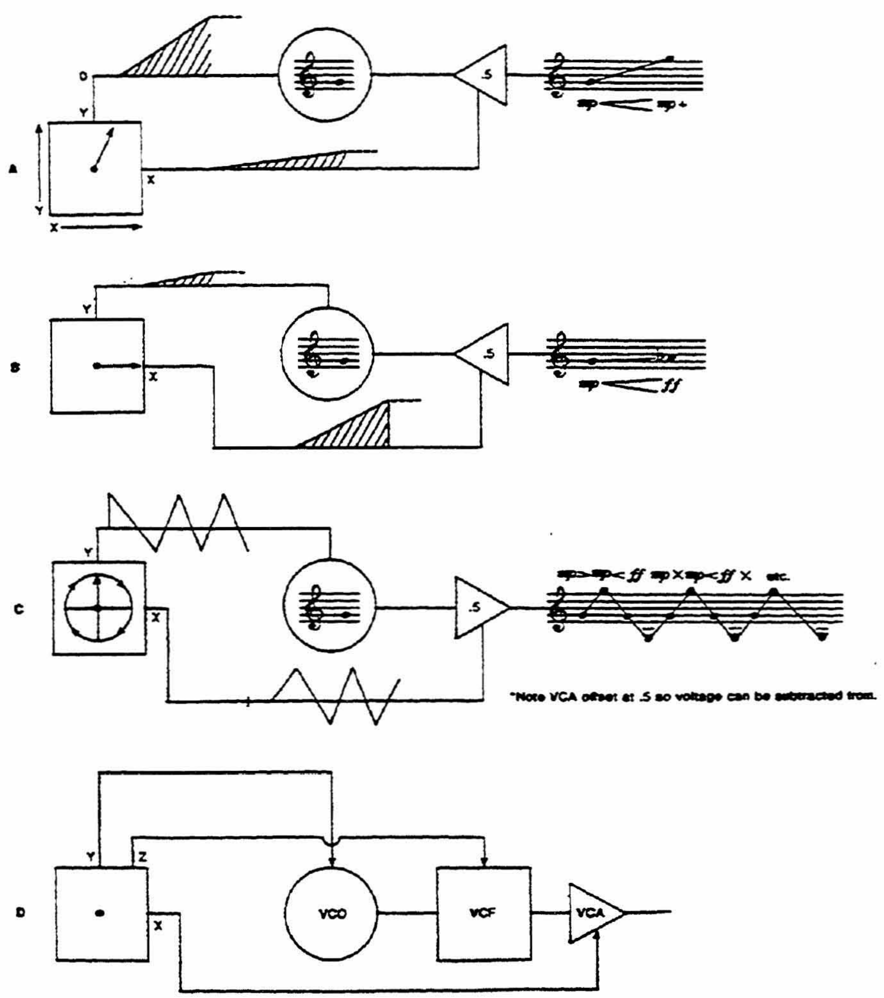

Figure 6.11. Joysticks

Even more useful, and more expensive, joystick designs provide a fourth voltage produced by a rotary handle. As the stick is being turned, the handle or entire stick is capable of independent rotation, thereby producing a fourth dynamically variable control. Such a four-axis joystick can provide control of four independent parameters with a single hand. Keep in mind that this is not easy and requires practice—but what instrument capable of significant structures doesn't?

Envelope Detectors

Many performance situations are enhanced and often simplified by interfacing external acoustic or electronic signals with electronic instruments. The circuits which provide for direct control from external instruments are generally known as *Envelope Detectors* (or Envelope Followers) and *Pitch-to-Voltage converters* (PVC). Basically, the envelope detector produces a control voltage proportional to the amplitude or incipient loudness of a sound, and the PVC produces a control voltage proportional to the fundamental frequency or pitch of a sound. The following section will discuss both instruments in some detail.

An "envelope" is commonly known as the loudness curve of a sound. Figure 6.12 illustrates some generalized envelopes from various familiar acoustic events. It must be pointed out that envelopes from acoustic sound sources are much more complex than these illustrations represent. If you have access to an oscilloscope, observe the voltage behavior of various kinds of acoustic waveshapes. It must also be stressed that these envelopes are a function of the loudness of the instrument, not the pitch. There is a certain amount of correlation between loudness and pitch, but in order to keep things understandable, don't be concerned with the correlation at this time. Most envelope detectors are designed to accept a line or high level signal. Details of this are given in chapter 14. In this present discussion it means that most acoustic sources such as electric guitars, microphones, some electronic pianos, etc., will have to be pre-amplified, as their signal is too low to be effectively detected by the circuit. Therefore, in trying out some of the suggested patches, have your studio technician adjust your instrument up to line level (if you don't know how to do it), or turn ahead and read chapter 14, page 225).

Working from a simple patch will facilitate the understanding of an envelope detector. If you have the resources, patch together the instrument illustrated in figure 6.13. After the audio signal is brought up to the correct level with a pre-amp, it is patched to the input of the ED. Its output is then patched to the control input of a VCO. It will be easier to hear what is happening if the waveshape has minimal harmonic content (sine or triangle). The ED will usually have a control marked "sensitivity" or "response." It may be a pot or switch which determines the proportion of output control voltage to the amplitude of the input signal. With this control at minimum, a "mf" sound will produce little or no control voltage. Play some different articulations on the instrument and experiment with how this control affects the VCO. If the sensitivity is at maximum, a moderately loud sound will produce a control that drives up the pitch of the VCO a proportional amount. As the sensitivity is lowered, the same sound will not have as much effect on the pitch of the VCO, since the output voltage has been reduced. The sensitivity control is, in fact, an attenuator which allows you to tailor the ED's response to your own needs. This same thing can be accomplished by lowering the control voltage attenuator on the VCO, but leave it at maximum for now so the various effects of the ED can be heard.

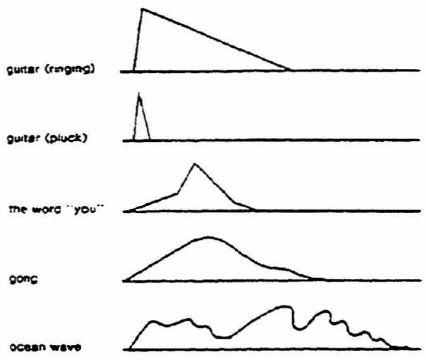

Figure 6.12. Generalized envelopes

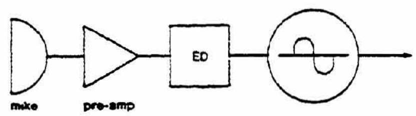

Figure 6.13. Envelope detector patch

Now patch up the instrument as in figure 6.14. In this case the output of the ED is patched to the control input of a VCA. Trying the same experiments, you will find that the loudness and articulation of the input signal determines the loudness and articulation of the signal from the VCA. Most ED's will have a second control marked "decay," "lag," or even "slew."

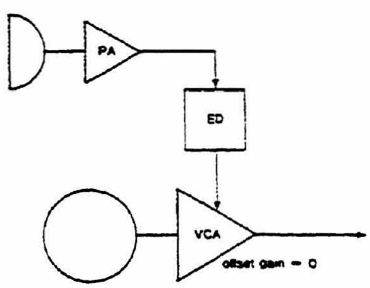

Figure 6.14. Gain control with an envelope detector

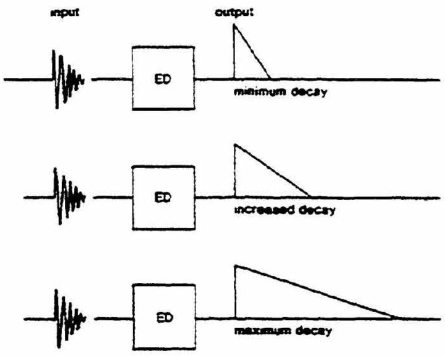

Figure 6.15. Envelope decay time

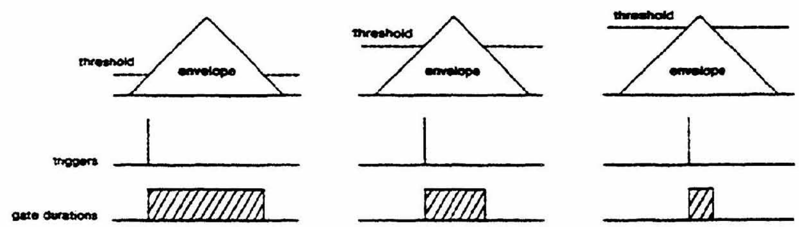

Figure 6.16. Triggers and gates from an envelope detector

The control determines how closely the circuit will follow or reconstruct the input signal as shown in figure 6.15. With this control at maximum, a staccato sound produces a control envelope with a somewhat longer decay. If the ED has a pot specifically marked "decay," this will usually refer to a downward slew, and sharp attacks will be maintained. If other terms are used, it may mean that the entire envelope is generally smoothed out. Listen to the response of the patch and the function will be evident.

An ED may respond linearly or exponentially, and some have switch or jack selection between the two types of detector slopes. In the *linear mode*, the ED will produce control voltage changes in direct proportion to the voltage level of the input signal. If the VCA being controlled by the ED is in exponential mode, the signal going through the VCA will have the same envelope as the signal going into the ED. If the ED is responding *exponentially*, dynamic changes toward the upper end of a loudness scale will produce greater output voltage changes from the ED than at softer input levels. The difference between these two modes of response is easily heard by driving a VCO with the ED.

A second output produced by most ED's is a trigger and/or gate voltage. Most ED's contain a circuit called a *Schmitt Trigger*. The Schmitt trigger examines the input or output envelope and creates a trigger or gate (a timing pulse) when it reaches a pre-set level known as the *threshold*. The threshold is determined by a *comparator* circuit and in some designs this term may be used. Figure 6.16 illustrates trigger and gate generation with different threshold values. The timing pulse output may respond either of two ways. In one mode of operation the gate will stay high for as long as the envelope is above the threshold level; this is the case with a true comparator. In certain instances the gate length may be determined by front panel controls. Some circuits will not generate a timing pulse until the envelope falls below the threshold level and a new attack is initiated. Other designs make it possible to generate new timing pulses with any amount of transient activity above the established threshold. Different instruments solve this problem in various ways ranging from simple to complex—check your instrument manual.

The patches in figure 6.17 suggests some initial applications of envelope detectors. Except in one case, the use of externally generated triggers will be left until later when they can be discussed in terms of devices that can effectively make use of them. In each case the patches can be used with any properly pre-amplified instrument—voice, guitars, barking dogs, etc. Figure 6.17A illustrates envelope transfer between two instruments. Each instrument is taken in parallel to a VCA and an ED. With the VCA offsets at zero, the signal of the respective instrument will not be audible (through the VCA) until it is opened up by a control voltage. The control used to drive the VCA is the control voltage produced by the other instrument. Instrument 1 will not be heard unless instrument 2 is playing, and vice versa. If 1 is playing sustained notes and 2 is playing a series of staccato notes, the sustained note of 1 will actually be heard as a series of staccato articulations. If the instruments can be directly heard, such as with voice, this type of patch is made more effective by removing the instruments from the immediate environment, or by tape recording the events. You may wish either to tape record the instruments before they are processed or to tape the final processed result. In this way only the processed events will be heard. Previous taping has the advantage of eliminating the pre-amplifiers, as tape outputs are already up to line level.

Figure 6.17B is a variation on the previous patch; in this case the loudness of instrument 2 controls the final timbre of instrument 1 by using a *detected* envelope to control a filter. Figure 6.17C uses an external envelope to control the loudness of an electronic signal. The oscillator may be generating a series of events from a keyboard or any other controller but is not heard unless the acoustic instrument is generating a control for the VCA. Figure 6.17D uses the opposite logic, in that the control envelope is inverted. If the instrument is *not* playing, the processed control is at maximum. As the instrument produces an envelope, the control voltage is proportionally attenuated. Hence the VCO is heard only while the acoustic instrument is not playing. As soon as the instrument begins to play, the inverted envelope turns down the VCA gain proportionally. If this sort of "if," "and," "neither," "nor" logic interests the reader, turn to the score for Robert Ashley's *String Quartet Describing the Motions of Large Real Bodies* at the end of this chapter (page 92).

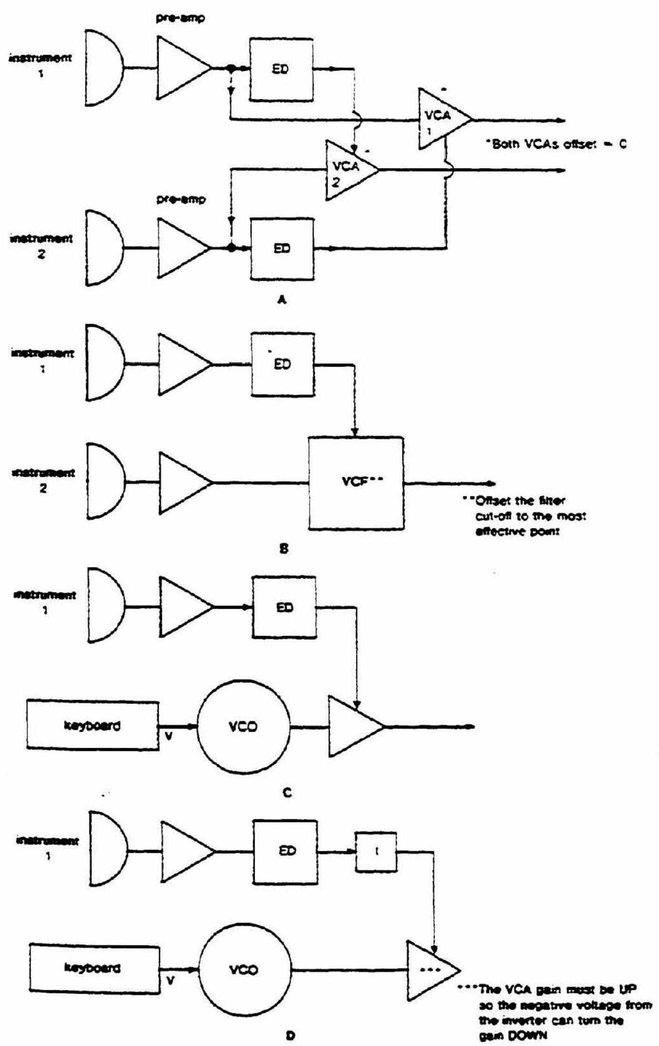

Figure 6.17. Envelope detector applications

Pitch-to-Voltage Converters

If the process of envelope detection is understood, the process of pitch-to-voltage conversion will be relatively simple to grasp but not always so easy to accomplish. A *pitch-to-voltage converter* (PVC) is exactly what the term implies: it detects the *fundamental* of a note being played and converts it to an analogous control voltage. For example, suppose a flute were to play a series of arpeggios, as in example 6.18. The PVC would extract the fundamental of each note and convert it to corresponding control voltages. Assuming the 1 volt per octave standard, the control voltages could then be patched to a VCO and, if offset to the correct pitch, would reproduce the pitches played by the flute. The VCO could also be offset at a different pitch and would track with the flute at that interval. With certain instruments, PVC's present some problems. Most acoustic signals have a transient harmonic state, especially on the attack. What this amounts to is that the fundamental of a pitch is not always the strongest or most apparent component of a sound's spectrum. When this is the case, it can be very difficult for the PVC to perceive what the fundamental frequency actually is. Depending on the nature of the transients, the PVC may switch back and forth between harmonics, or even noise, until the waveshape has settled down enough to present clearly the fundamental for conversion. This, of course, takes too much time for adequate musical applications. There are several methods a manufacturer may use to solve these problems, but this also takes time for the circuitry to do the job. Current surveys of PVC users indicate various degrees of satisfaction and dissatisfaction, most of them relating to this type of problem. We can assume, however, that technology will perfect the PVC, and the following discussion will be based upon this assumption.

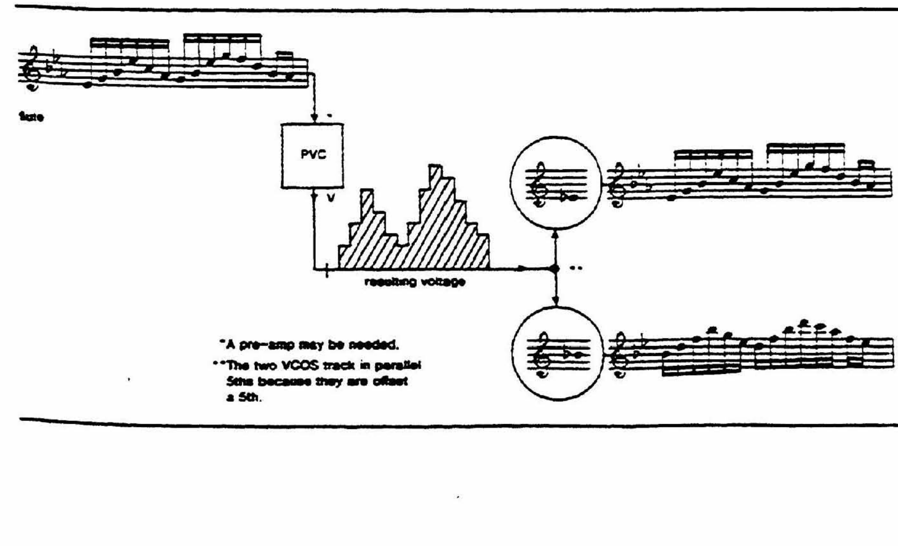

Figure 6.18. Pitch-to-voltage conversion

Since most of the PVC applications are to make an electronic sound source track at set intervals, it is consistent that envelope duplication would also be of use. Most PVC's have built-in envelope detectors and Schmitt triggers. Beyond this, one can think of the PVC as just an alternate to the keyboard.

Miscellaneous Controllers

The EML Poly-Box is a combination one-octave keyboard and PVC. This is an accessory designed to provide limited polyphonic capabilities to an instrument. An output of any VCO is patched to the Poly-Box. Since in this case the PVC is given a relatively steady-state electronically generated signal, the conversion is uncomplicated and very accurate. The converted voltage then controls an internal oscillator in parallel with the external source and offset as desired. By means of an electronic organ technique of top-octave division, the C-to-C chromatic polyphonic keyboard is tuned to the pitch of the master oscillator. If the master oscillator is tuned to "A," a C major scale will sound like an A major scale. The term "polyphonic" must really be qualified in this case as all available 13 pitches come from a single output and are subject to the same enveloping, filtering, etc. (see fig. 6.19).

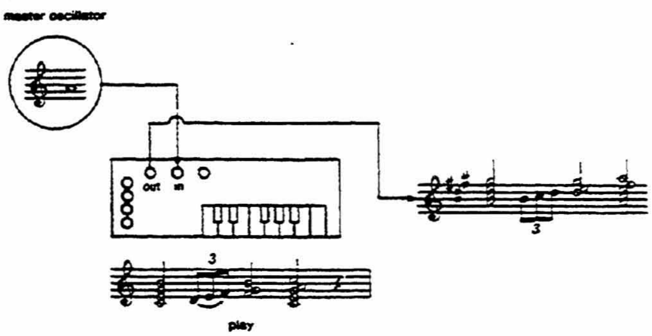

Figure 6.19. Pitch following and transposition with the EML Polybox

The percussionist is accommodated by several kinds of percussion interfaces and percussion synthesizers. Figure 6.20 shows Star Instruments' Synare 2 Percussion Synthesizer. This is the basic synthesizer voice with a monophonic tunable keyboard taking the form of rubber pads much like practice pads. The padboard is purposefully laid out so as not to resemble an organ format. Each pad may be assigned a pitch and octave, so that pitch patterns can be set up to be accessed in the most convenient manner. Another switch is used to preset the pads to a chromatic sequence from C to B. The pads also generate triggers for activating other functions built into the instrument. The Synare 2 is designed as an independent instrument, and therefore its control voltages and triggers are not available to be interfaced with other synthesizers. The Moog Percussion Controller is yet another type of source of control for the drummer which reacts in much the same manner as a touch keyboard. Its output voltage is determined by how hard the drum is hit, and the voltage can be patched to any usable voltage con-

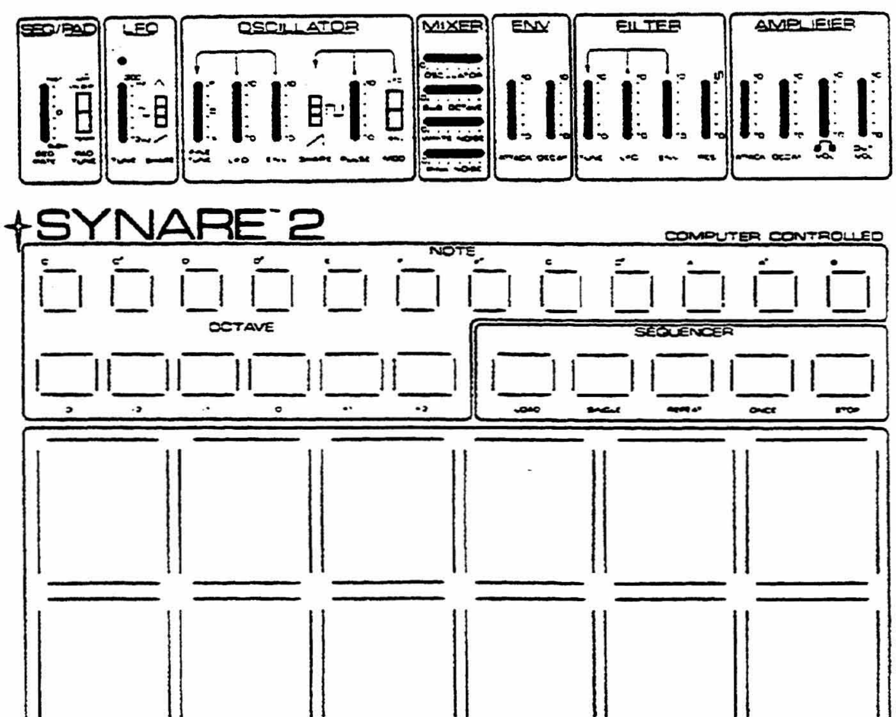

Figure 6.20. Synare 2 Diagram (From the Synare 2 Percussion Synthesizer/Digital Sequencer Manual. Courtesy of Star Instruments, Inc. Used by permission.)

Lyricon Instrument

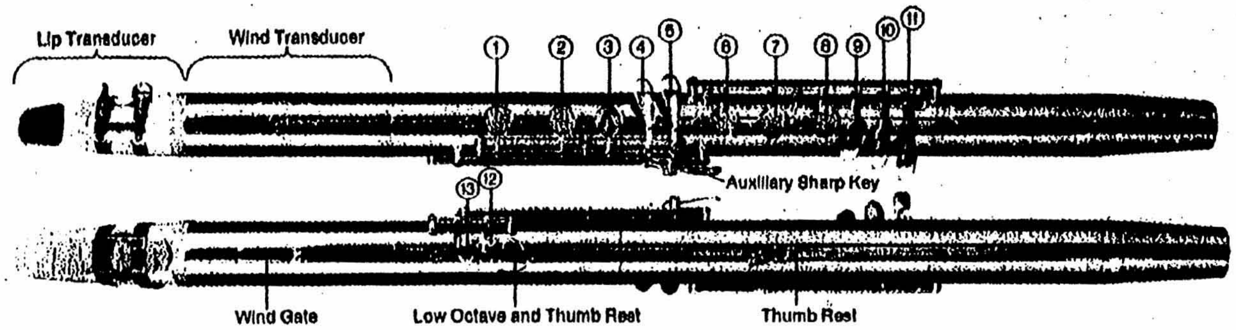

Computer Console

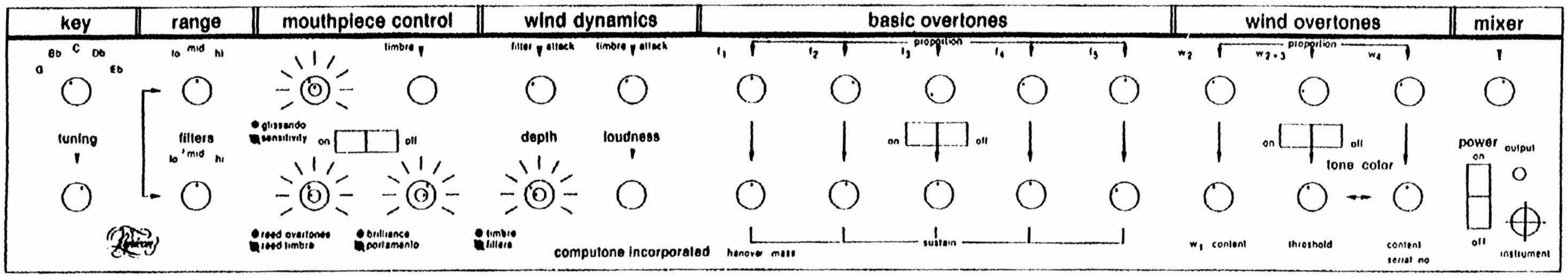

Key switch converts or "transposes" basic key of instrument from G through Bb instantaneously.

Tuning control enables continuous control of pitch through 1½ full tones from any basic key setting.

Range section varies the five octave range of the Lyricon. Instrument controls 3 octaves by thumb shift. *Filters* varies filter overtone pitch in accordance with *Range* setting. *Range* and *Filters* are used normally on coinciding positions.

Mouthpiece Control section enables initial set-up of glissando, timbre, and overtones all to be controlled by the reed transducer. Variations from these initial settings are then under the command of the player through changes in his embouchure. The section may be turned on or off without affecting settings. *Brilliance* increases the overall presence of strident or bright tones. *Portamento* enables the player to slow down note changes or "glide" from note to note. *Timbre* changes the main character of the sound from "brassy" through "woody". *Sensitivity* adjusts resistance of blowing effort as compared to loudness.

The *Wind Dynamics* section adds colorful qualities to the sound by varying the overtones and timbre as the player varies his wind attack. The speed at which the timbre and overtones change is continuously controllable by the *filter attack* and *timbre attack* controls. The depth of contribution of each is controlled separately by their respective *depth* controls.

The *Loudness* control enables the player to select a suitable loudness range as dictated by room acoustics, number of instruments in group, etc.

The *Basic Overtones* section is comprised of five distinct and independently controllable tones fixed at prescribed musical intervals and designated f1, f2, f3, f4, and f5. The individual *proportion* controls vary the extent to which each tone contributes to the overall sound. The *sustain* controls provide a method for coloring the contribution of each overtone independently. The Basic Overtones section is at the command of the player continuously as he plays as determined by his initial adjustments of the *Wind Dynamics* and *Mouthpiece Control* sections.

The *Wind Overtones* section is a separately controllable tone generating section that varies its tonal structure with changes in wind pressure enabling the player to select and reinforce desirable overtones while playing.

The *Tone Color* controls add a "reedy" quality to the sound at the discretion of the player as he varies his wind pressure.

The *Mixer* control balances the initial contribution to the overall sound of the *Wind Overtones* and *Basic Overtones* sections. With wind variation alone, the player is then able to vary and mix the sound character produced by each section.

The Output jack may be used to drive headphones, an external amplifier, or other electronic devices.

Figure 6.21. The Lyricon Instrument and Computer Console (Courtesy of Computone, Inc. Used by permission.)

trolled parameter. The percussionist may control the pitch of a VCO, loudness by means of a VCA, etc. Two manually set controls determine the drum's sensitivity (how hard one has to hit to get a response) and scale or output voltage range. These voltages, of course, may then be further altered by whatever processing modules are needed and available.

Wind players cannot be neglected; they are accommodated by instruments like the Lyricon (figure 6.21). Designed in much the same manner as a clarinet with fingerings based on the classic Boehm system, the instrument gives direct control over pitch, loudness, articulation, and timbre.

Biological Controls

One of the more interesting areas of performer input is the sensing and transduction of direct biological functions and reactions. Keep in mind that anything which can be measured can be turned into a voltage, and if a voltage is compatible with an instrument, practically anything is fair game. Various types of brainwave activity, skin temperature, muscle tension, periods between different modes of physical activities, etc., can be used and have been used as real-time performance input for electronic instruments.

One of the earliest works of this nature is Alvin Lucier's *Music for Solo Performer*. Here the performer's *alpha activity*[2] is sensed through special amplifiers and amplified to be used as sub-audio and low frequency activators for various resonating objects. Since this is such a landmark work in the development of input concepts, the score is reproduced here as a matter of documentation. A newer version of *Music for Solo Performer* was developed in 1975 with the assistance of Nicholas Collins (figure 6.22). In this version the "comparator" and "retriggerable monostable" generate timing pulses when the alpha voltage

2. An alpha wave is a very low magnitude voltage of from 9 to 13 Hz generated by certain brain activity.

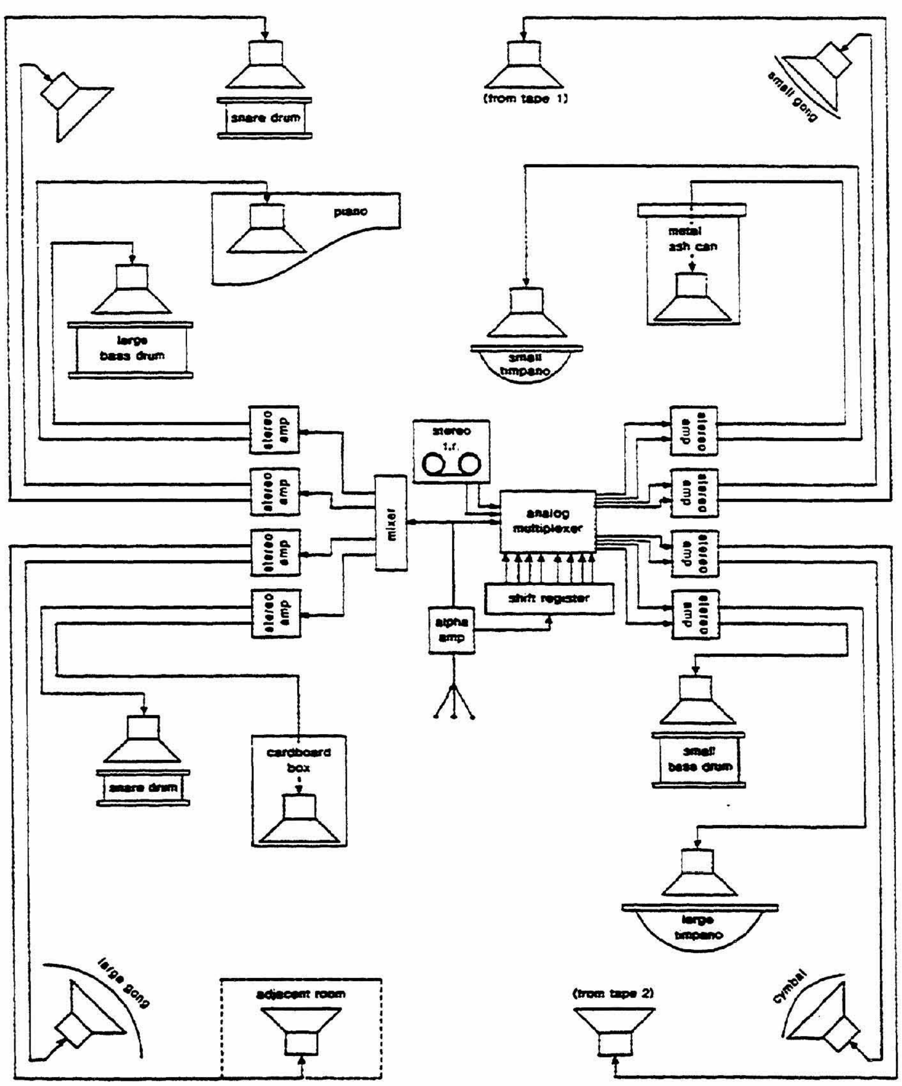

Figure 6.22. Alvin Lucier's *Music for Solo Performer* (Used by permission of the composer.)

exceeds a preset threshold—really an envelope detector and Schmitt trigger. The pulses are then used to mix and route the low frequencies to the resonating objects. This version was performed at the Paula Cooper gallery in May of 1975—the tenth anniversary of the piece. It should be interesting to be at its Silver anniversary in 1990 to hear/see what new orchestrations technology will contribute!

Music for Solo Performer (1965)

The idea for *Music for Solo Performer (1965)* came out of a series of conversations I had in 1964 with physicist Edmond Dewan of the Air Force Cambridge Research Laboratory in Bedford, Massachusetts. At that time, Dewan was engaged in brainwave research particularly as it pertained to flying: it was believed that certain periodic visual rhythms of slow propellor speeds were locking onto corresponding brainwave frequencies of aircraft pilots, causing dizziness, blackouts, and epileptic fits. Dewan, an accomplished amateur organist, was eager to share his ideas and equipment with any composer interested in exploring this hitherto uncharted region. Inspired by the imagery and technology of electroencephalography, I immediately set to work to discover all I could about alpha.

Working long hours alone in the Brandeis University Electronic Music Studio with Dewan's equipment (two Tektronix Type 122 preamplifiers in series, one Model 330M Kronhite Bandpass Filter, which had been set for a range of from 9 to 15 Hz, one integrating threshold switch, electrodes, appropriate connectors, etc.) plus the studio's conventional equipment, I learned to produce alpha fairly consistently. I found that success could be attained by setting the gain on the audio amplifier to a point just below oscillation so that even a relatively weak alpha signal would come through. Often, I could produce alpha only in short bursts; it took precisely the right physical and psychological conditions to sustain it in longer phrases. I did not attempt any experiments in bio-feedback as such but was aware of the reinforcement of my own alpha-producing ability while monitoring in real-time the sounds that came out of the studio loudspeakers. I observed that over long periods of time, for example while recording alpha for storage material for use in performances, or when tired, relaxed or slightly bored, the alpha would tend to driift somewhat downward and settle.

From the beginning, I was determined to make a live performance work despite the delicate uncertainty of the equipment, difficult to handle even under controlled laboratory conditions. I realized the value of the EEG situation as a theatre element and knew from experience that live sounds are more interesting than taped ones. I was also touched by the image of the immobile if not paralyzed human being who, by merely changing states of visual attention, can activate a large configuration of communcation equipment with what appears to be power from a spiritual realm. I found the alpha's quiet thunder extremely beautiful and, instead of spoiling it by processing, chose to use it as an active force in the same way one uses the power of a river.

I used the alpha to resonate a large battery of percussion instruments including cymbals, gongs, bass drums, timpani, and other resonant found objects. In most cases, it was necessary physically to couple the loudspeaker to the instrument, although in the case of highly resonant bass drums and timpani, the loudspeaker could be an inch or so away. Placing loudspeakers in trash cans or cardboard boxes worked extremely well, as did using cheap small speakers face down on snare drums or taped against windows. I learned that by varying both short bursts and longer sustained phrases of alpha plus making musical decisions as to placement of loudspeakers, choice of resonant instruments or objects, volume control, channelling and mixing, I was able to get a wide variety of sonorities as well as retain the natural physical quality that seemed asked for by the sound source itself.

In conjunction with the threshold switch, I used the alpha as a control signal to operate a stereo tape recorder upon which was stored transposed versions of pre-recorded alpha accelerated up to five times. These higher phantoms relieved the sameness of the low-frequency originals and were used both by themselves and to impart contrasting resonances to whatever instruments they were coupled to. My original intention was to develop the idea of control to include more sophisticated systems of lights, alarms, television sets, radios, whole environments.

Although an assistant is usually needed to operate the preamplifier controls, I did perform *Music for Solo Performer (1965)* by myself on the "Visions of the Present" festival in Stockholm in 1966. I succeeded in producing alpha by letting my hands operate the amplifier controls as randomly as possible to avoid visualization caused by decision-making with reference to channeling and placement of loudspeakers. I have always wanted to have a situation in which the alpha could perform all the control functions by means of a code; for example, a certain number of bursts of certain durations could trigger certain mixtures of channels.

I have not pursued further development of brainwaves as a musical resource in order to let myself move on to other works involving other ideas including echolocation, underwater sound, resonant characteristics of rooms, and the alteration of vocal identities. I am happy to see that many other composers are using alpha in creative and imaginative ways.

Music for Solo Performer (1965) is dedicated to John Cage who assisted me in the first performance on May 5, 1965 at the Rose Art Museum, Brandeis University and to whom I am grateful for encouragement greatly appreciated at that time as well as now.

Alvin Lucier
September 8, 1971
Middletown, Connecticut

More technically complex and differing applications of bio-control were pioneered and continue to be developed by composer/performer David Rosenboom. Much of his early work is documented in *Biofeedback and the Arts: Results of Early Experiments*.[3] Rosenboom's *Portable Gold and Philosophers' Stones* (*Music from Brains in Fours*) uses control voltages derived from galvanic skin response and body temperature. These voltages are used to control a bank of

3. Published by A.R.C. Publications, P.O. Box 3044, Vancouver, B.C., Canada, V6B 3X5.

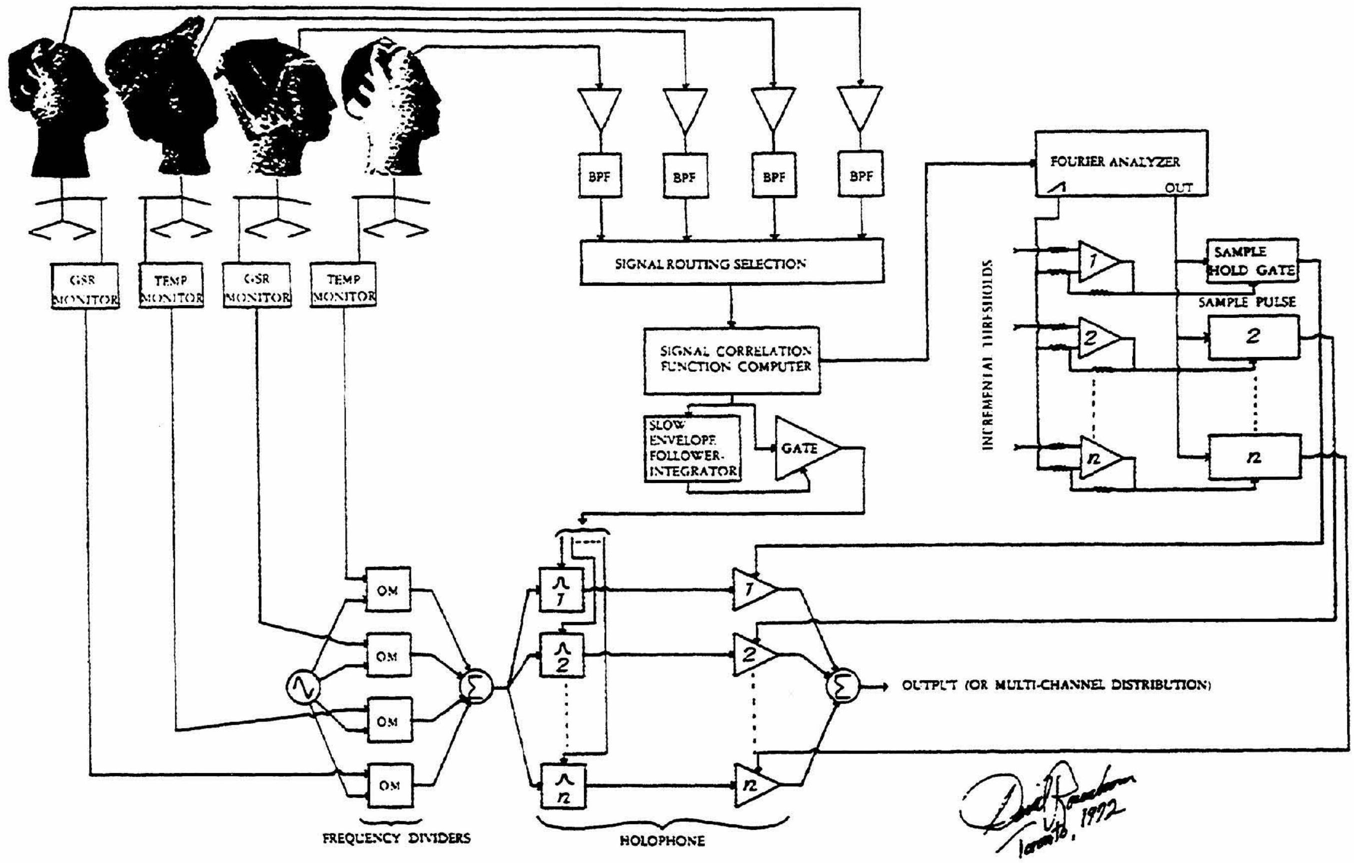

PORTABLE GOLD AND PHILOSOPHERS' STONES (Music From Brains In Fours)

David Rosenboom

for Ted Coons

Electrodes and appropriate monitoring devices are attached to monitor the brain waves of four musicians who have been well rehearsed in the voluntary control of their psychophysiological functions. Monitors are also attached to two of the performers for body temperature and to the remaining two for galvanic skin response. This information is all fed into an analyzing system that extracts such things as, percent time per minute spent emitting Alpha brain waves, average time spent emitting Alpha, the amount of variance in the amplitude of Alpha, the coherence time of any patterns discovered in the brain wave, correlations between brainwaves of two or more performers, relative entropy of the waveforms, relative intensity of various spectral bands in the brain waves, etc.

A sound producing system is set up as follows. Four frequency dividers, (NEURONA CO. Model OM1100101, see operating instructions), capable of producing pulse waves that are some integral division of a sine wave frequency being fed to all four, are set up. These dividers are voltage controlled, in that the integral divisor of the input reference frequency can be varied by applying a varying reference voltage to a separate input on the unit. With one sine frequency being applied to all four dividers, then, exact pitch ratios can be produced. This divisor selecting reference voltage comes from the measures of body temperature and galvanic skin response of the performers. Further, the pulse waves of exact frequency ratios are fed into a bank of voltage controlled resonant band pass filters, called a Holophone. Relative amplitudes of the filters' outputs can be programmed. The results of the analysis of the performers' brain waves is directly applied to the voltage control inputs of the filters. The relative output amplitudes of the filters are controlled by signals deriving from the Fourier analysis of the brain waveforms.

When two or more pulse waves of exact pitch intervals are applied to a resonant band pass filter, the filter can extract the harmonics present in the waveform composite. A particular exact interval will then produce a set of extractable harmonics that forms a mode. When the interval changes, so does the mode. The music proceeds as an improvisation within these modal possibilities. The pulse wave intervals are also played and function as a drone which is important to the piece.

The techoician's part lies in the modes of analysis of the brain waves he uses and their application as control for the sound producing system. He must be schooled in brain biofeedback research and respond to the experiences of the performers during exploratory rehearsal sessions. For live performances the author uses a Princeton Applied Research Model 100A Signal Correlation Function Computer and a Model 102 Fourier Analyzer.

Figure 6.23. David Rosenboom's *Portable Gold and Philosopher's Stones (Music from Brains in Fours)*

frequency dividers, and the controls are further processed to control filters. The score is reprinted here and the patch for performance is illustrated in figure 6.23.

Richard Teitelbaum's *In Tune* is still another approach to bio-control, utilizing visual display and amplified throat and heart sounds (figure 6.24). Two filters in series allow only brainwave activity between 8 and 12 Hz to be conveyed to controls by an envelope follower (detector). The detected voltages control two VCO's and the trigger output allows the loudness and timbre to be shaped by an envelope generator. This work was composed specifically for a Moog instrument.

I am generally trying to avoid aesthetic discussions, but biofeedback suggests some relevant aesthetic questions and answers. I would strongly recommend that the reader read Rosenboom's *Biofeedback and the Arts*.

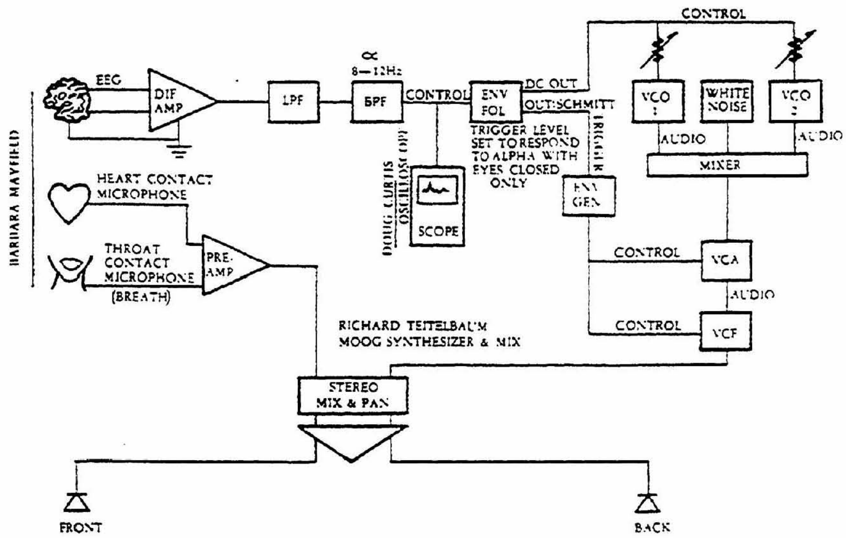

Figure 6.24. Richard Teitelbaum's *In Tune* (From Biofeedback and the Arts—results of early experiments. Ed. by David Rosenboom, Aesthetic Research Centre of Canada. Used by permission.)

Programmed Control Voltage Sources

So far the discussion of controls has been restricted to direct physical input from the player. In spite of their seeming complexity and range of possibilities they still are not totally adequate for the unleashed minds of musicians. "Playing" is a very complex matter—even on the most simple instrument. As yet there does not exist a single circuit that can replicate the amount of information which a traditional player transmits to his instrument. At the same time the nature of a synthesizer requires that we have the ability to organize and temper parametric responses to specific needs. The next step is to have the possibility of preset responses or voltages which can be accessed by the performer as needed. The following sections will explore circuits and modules which perform preset and programmed functions.

Strictly speaking, a *function* is the activity of a "thing," and the "things" described here have specialized and/or general functions. In terms of our applications, the activities or functions are voltage patterns. Voltage functions must have a beginning, ongoing state, and end, and the performer must have some means of defining these time points. Timing pulses, triggers, and gates are used to initiate, sustain and terminate functions.

The voltage outputs of programmed voltage sources such as envelope generators (EG), sequencers, random voltage sources, sample and hold modules (S/H), etc., are usually associated or correlated with some other parametric activity. For this reason most kinesthetic inputs, like keyboards and envelope detectors, have associated timing pulse outputs. When a performer calls up a pitch voltage for a VCO, a timing pulse can simultaneously cue another voltage to do whatever it is supposed to do—spin a sound around the room, play a programmed arpeggio, sweep a VCA or filter, etc.

Review of Timing Pulses: Activation of Events

As a quick review, let's look again at how manually activated timing cues and Schmitt triggers behave. Figure 6.25 illustrates these relationships. As soon as the keyboard is touched, the trigger voltage is generated. A trigger is usually a high voltage in the form of a transient spike lasting about 100 microseconds. On the Moog modular systems, there is a distinction between "switch-closing" or switch trigger (S-TRIG) and a fast rising positive pulse known as the "voltage trigger" (V-TRIG). They accomplish the same thing, so that the user only has to be concerned with which modules accept "S" or "V" triggers. As long as the key is depressed (or touch plate is being touched) the gate voltage is present. This gate allows the various function generators to continue with their respective activities. As soon as the key is released, the gate is switched off and the activity will stop, or begin to stop.

Envelope detectors have similar rationale, that is, the generation of a trigger as soon as the input exceeds a set threshold, and the gate will remain on as

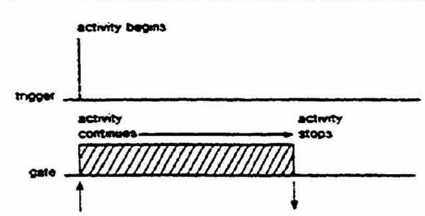

Figure 6.25. Gates and trigger reviewed

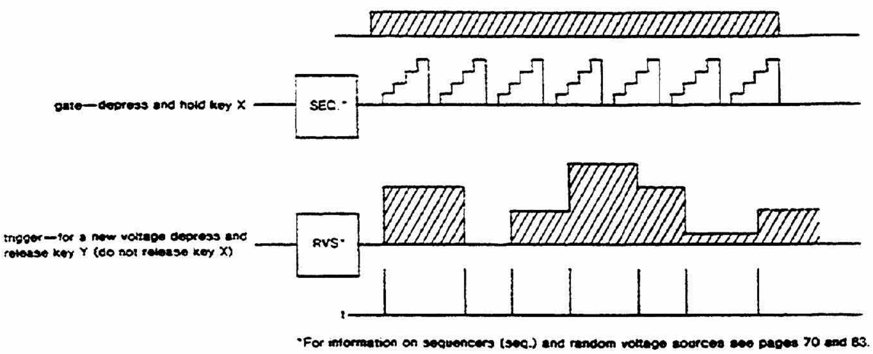

Figure 6.26. Gate and trigger functions

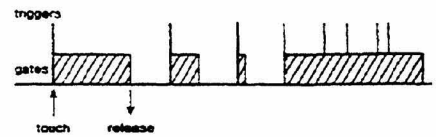

Figure 6.27. Gate and trigger on one line

long as the input voltage is above the threshold. As soon as the input voltage is below the threshold, the gate will go off. The reason for the distinction between *gate* and *trigger* information is that it allows one input device such as a key closure to separately activate and sustain different events. A key closure may activate a repetitive pattern of voltages and simultaneously call up a random voltage pattern. If the voltage pattern is to continue while a new random voltage is called up, the gate information would maintain the pattern's activity and the trigger would call up the random voltage—all by just touching another key. It could even be done by very rapidly releasing or touching the same key, as long as it is done fast enough so that the interruption in the gate voltage is not apparent (figure 6.26).

Some systems such as the Buchla instruments eliminate the necessity of separate trigger and gate outputs and inputs. The gate and trigger information are set at two different voltage levels and may be transmitted simultaneously with a single patchcord as illustrated in figure 6.27. With this approach the function generators can be told, usually by means of switching, whether or not to respond to the gate information.

Timing Pulse Generators

In many cases, ongoing timing pulses may be called for which are independent of any manual or detecting input. This would be the case when using timing pulses for generating different levels of tempo and various repetitive rhythmic activities. Modules called Pulsers and/or Low Frequency Oscillators (LFO) are generally used for this task. Most smaller performance instruments such as the ARP Odyssey, Roland System 100, etc., will contain an oscillator dedicated to a frequency range of about .2 to 20 Hz. These sub-audio waveshapes are usually used for different types of modulation (see chapter 7), but also may be used for the generation of triggers. The way this is accomplished is that the squarewave output is fed to a Schmitt trigger and corresponding triggers are generated. Some function generators will not require a trigger as such and will trigger with the leading edge of the squarewave. Unless the oscillator has some means of duty-cycle control or pulse-width modulation, there will be no way to vary the gate time. With the Schmitt trigger technique, any sub-audio waveform can be turned into a trigger, and non-switching waveshapes such as sine, triangle, etc., can produce variable gate times by adjusting the threshold. On smaller performance instruments, the LFO is usually not voltage controllable. On larger instruments, oscillators with sub-audio ranges can be fed to Schmitt triggers, and voltage control of the VCO results in voltage controlled trigger rates.

LFO's dedicated to the generation of timing pulses are referred to as Pulsers or Timing Pulse Generators (TPG). Although no longer in production, the Buchla Series Timing Pulse Generator is a useful approach to timing pulse production and is still in operation in studios. The Buchla 100 Series instruments did not sum internal offsets with controls, so that the period of pulse generation had to be voltage controlled *or* manually varied, not both at the same time—although this could be accomplished by summing external controls through a control voltage processor before being patched to the "period" input. Timing pulse rate is often measured in terms of "period." It is important to understand that the term "period" means the time between pulses. Higher voltages applied to a period input will result in longer periods or less frequent pulses.[4] The "pulse length" or pulse width determines gate or sustain information and can be manually or voltage controlled. At a pulse period of 1 second, 100% pulse width indicates that the pulse voltage will be high for the entire period. A 50% pulse width (see

4. This is not the case with the Pulser on the 208 Programmed Sound Source. Information on this instrument is covered in *Programming and Meta-Programming the Electro-Organism* by Allen Strange, published by Buchla and Associates, Berkeley, California.

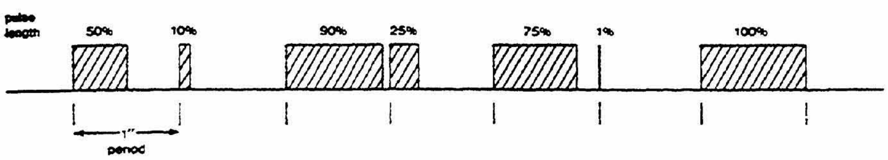

Figure 6.28. Pulse length

figure 6.28) indicates that the pulse is high for only one half a second. Pulse width in no way affects the rate at which pulses are being generated. Using voltage control of pulse width can offer some interesting correlations. These applications will be covered when discussing envelope generators (see page 64). The Buchla 100 Series Timing Pulse Generator has two alternating outputs, and these output pulses are alternately assigned to each output, allowing pulse division by 2 or alternate triggering of functions. With the mode switch in the "repetitive" position, the TPG will produce timing pulses at a period proportional to the manual offset or an external control voltage.

Certain oscillators can be used to perform most of the above tasks. What is needed is a low frequency squarewave oscillator with pulse width modulation

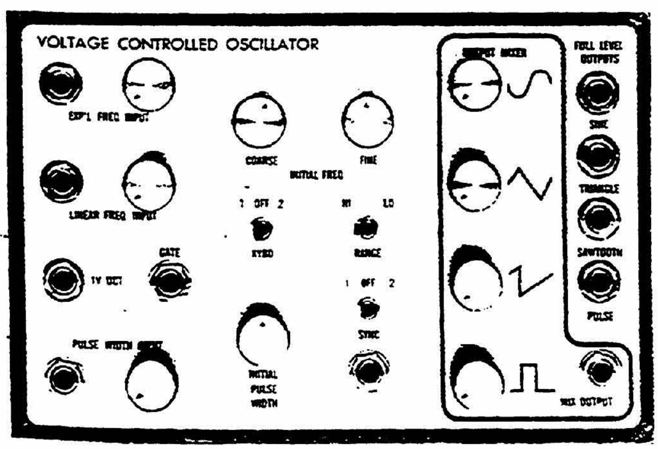

Figure 6.29. Eu 2200 VCO (Courtesy Eu Systems, Inc. Used by permission.)

and gate inputs. The Eu 2200 has these specifications and is pictured in figure 6.29. The Eu 2200 VCO oscillates as slow as .03 Hz. That means an incipient pulse period of 33 seconds—certainly long enough for most applications. When the "gate" input receives a voltage of about 2.5 volts or more (from another gate or any other controller), the oscillation will stop, and as soon as the gate voltage drops below this threshold, the oscillator will start again. This is close enough to a start-stop mode to be workable for the knowledgeable user. The pulse width offset and pulse width modulation input determine the duty-cycle from 0 to 100%. This is comparable to width or gate time. On some oscillators the pulse width can virtually be 0 or 100%. With 0% pulse width all you have is 0 volts, and 100% pulse width means non-fluctuating DC—hence no oscillation in either case. If a pulse width variable oscillator appears not to be working, check out the pulse width controls. Whether the oscillator has to be patched through an ED to give the correct voltage levels will vary from instrument to instrument. Usually, as long as an incipient trigger and gate voltage are above the required levels, everything should work. Of course not all VCO's have all these features; but a little thought and investigation of the specs will usually bring latent possibilities to light.

Electronic Switches

Electronic, Analogue or *Sequential Switches* are not limited to timing pulse information, but they will be discussed briefly so that various function generators can be presented in a variety of applications. Figure 6.30 illustrates a logic module capable of processing

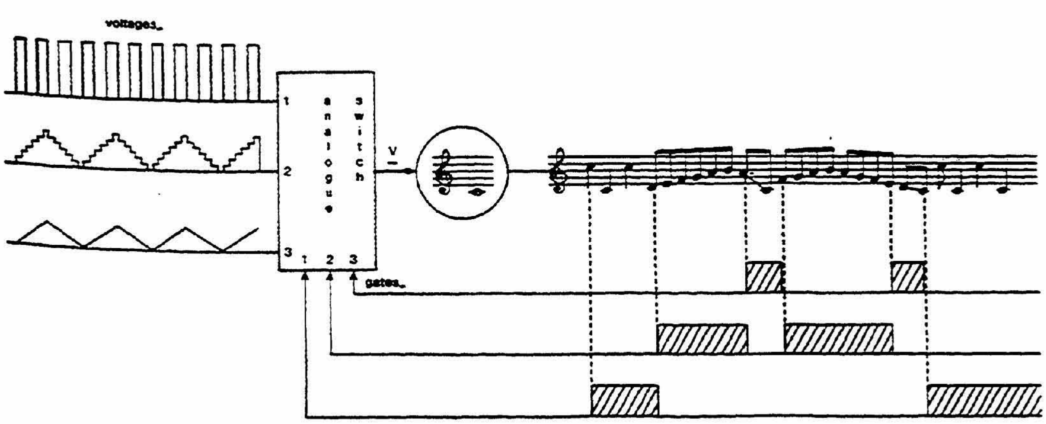

Figure 6.30. Analogue switch

both analogue (control) and digital (timing) voltages. For example, imagine that three different keyboard players were producing independent controls for a VCO, and the three keyboard voltages were taken to the three "signal" inputs of the switch. The voltage which is present at the output depends on the condition of the input pulse information. If a pulse input is activated, the associated control voltage input is connected to the output. Thus a player may select which of the ongoing controls will be sent to the VCO by routing pulses to the desired input or by manually activating a front panel switch. The switch also has corresponding trigger outputs which are activated whenever a corresponding input signal is selected. Instruments such as the Moog 962 Sequential Switch can switch control or audio voltages, and the switching may be pulse or manually activated in any chosen order. They may be sequentially switched (1-2-3-1-2-3 or 1-2-1-2, etc.) by applying timing voltages to the "switching input."

Timing Pulse Delays

A timing pulse is binary information—it is either there or not there—and just about all one can do is to define conditions in which they will or will not be generated or allowed to have some effect. There is, however, one other possible timing pulse process, and this is to delay it. Some function generators have built-in trigger delays. With a pot or control voltage, the user may define a delay time. Once this delay time has been defined, a pulse can be applied and the function will not begin until after that delay time has been completed. Figure 6.31 shows the Moog 911-A Dual Trigger Delay. In this design a "coupling mode" switch determines the routing of the input and output pulses. In the "parallel" position the trigger inputs of both delays are connected. A single pulse at either input will activate both delay circuits, each still having the possibility of independent delay time for each circuit. When each circuit's delay time is complete, a pulse will be generated at its respective output. When the switch is in the "series" position, the trigger output of the upper circuit is connected to the input of the lower circuit. When the delay cycle of the upper circuit is complete, it will automatically trigger the lower circuit. In the "off" position both circuits are completely independent. In addition to dedicated trigger delay modules, there are a few "tricks" that one may use to make other function generators delay and divide timing pulses. These techniques will be described in connection with the appropriate module.

The preceding paragraphs by no means present extensive information on timing pulse logic. But there is enough information to "trigger" the question, "so what?" The rest of this chapter will be dedicated to a survey of most types of function generators. Having a basic understanding of timing pulse logic at this point makes it possible to explore the many applications of control voltage generation without confusing the role of a timing voltage and a control voltage. *A timing pulse can initiate, sustain, or terminate a function; a function is a control that defines a parametric response.*

Figure 6.31. Moog 911A Trigger Delay

Voltage Sources

Envelope Generators. The most common function generator is known under various names, such as Envelope Generator (EG), Attack Generator (AG), Transient Generator (TG), Contour Generator (CG), Function Generator (FG), AR, ADSR, and probably some more I have omitted. Such a divergence in terms has to do with their assumed application by the manufacturer or with attempts to describe circuit operation. Each term has come under semantic attack by the competitors with both significant and insignificant arguments. Rather than contribute to the situation of a confused terminology, I will arbitrarily use the general term *Envelope Generator* (EG), simply because this is universally understood.

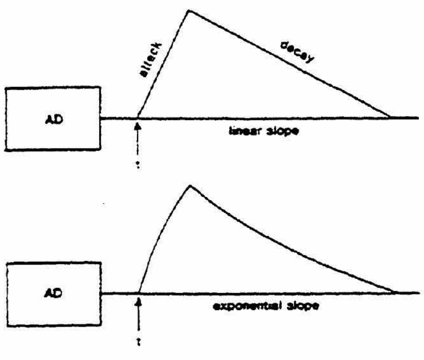

Figure 6.32. Attack-decay envelope generator

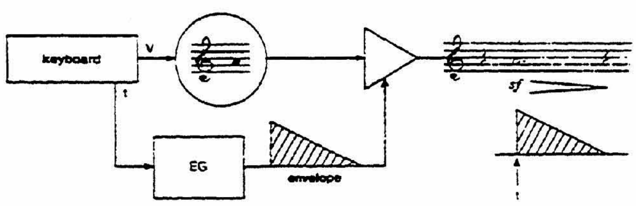

Figure 6.33. Basic envelope generator patch

The EG, upon receiving a timing pulse, generates multi-staged evolutionary voltage. The most simple EG is the "attack-decay" genre (figure 6.32). Upon receipt of a trigger, the module will produce a voltage which rises to its maximum voltage output (the attack), then falls back to 0 volts (the decay mode). The amount of time the voltage spends in the attack and decay is determined by front panel offsets, and may range from a few milliseconds to 30 seconds or longer, depending on the manufacturer (although the range of attack time on an EG is usually shorter than available decay time).

The most common application of EG's is illustrated in figure 6.33. A keyboard is controlling a VCO which is patched through a VCA. With the VCA offset at 0, some control is required to raise the gain so the oscillator may be heard. This may be an unnecessary statement, but it would be convenient if the gain was turned up and down simultaneous with pitch choice by the keyboard! (This, however, also may not be the case.) Assuming that this is what is to happen, simply take a pulse issued by the keyboard to the EG and patch the EG control to the VCA. Now every time a key is depressed for pitch selection, a simultaneous trigger tells the EG to produce its voltage function, and we hear the loudness of the sound evolve in proportion to the control voltage. Keep in mind that the envelope voltage is summed with the VCA's internal offset voltage, so for the signal to decay to silence the offset must be at 0.

Referring to figure 6.32, it was shown that these envelopes may have *exponential* or *linear slopes*—either set be the designer or user selectable. If the VCA has a linear response, it may be best to use exponential slope, and vice versa. If there are no switches or specs about this on your instrument, don't worry about it.

Figure 6.34A shows a patch variation that reverses the control routing. Here the keyboard determines the loudness and the EG causes the pitch of the VCO to

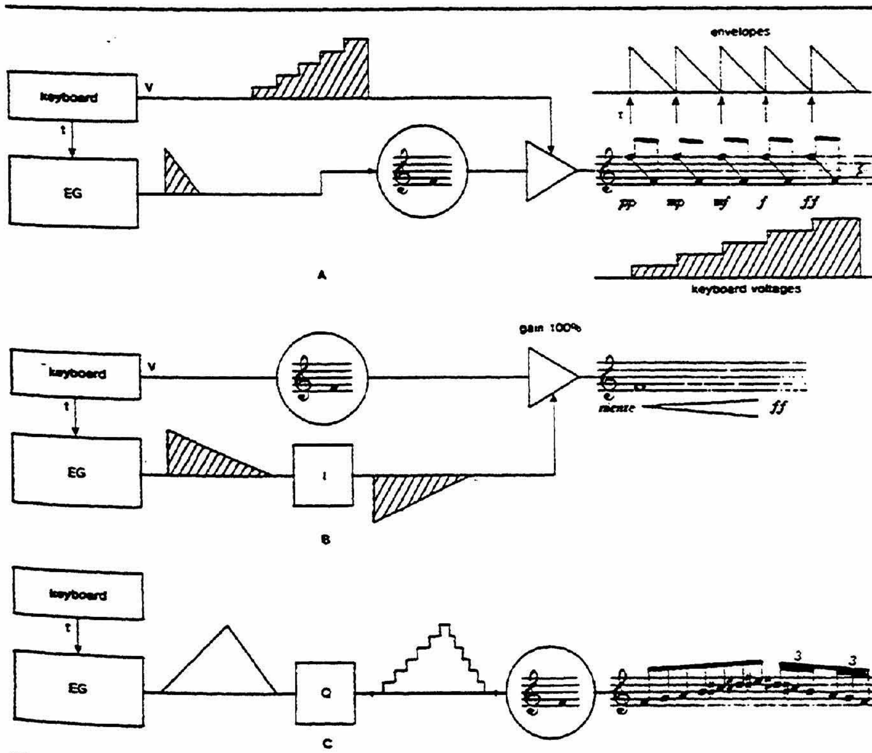

Figure 6.34. Envelope applications

rise and fall with each trigger. Figure 6.34B is a further variation which inverts the control envelope. In this case the VCO is sonic until a trigger is received. The rising and falling envelope is then inverted to a falling and rising envelope to effect a diminuendo and crescendo. In figure 6.34C an envelope is quantized before being patched to a VCO and also patched in its normal state to a VCA. The result is a correlation between a scale or arpeggio (depending on quantization points) and loudness. Most AD envelope generators will have a "duration" control. The setting of a pot will determine how long the envelope will remain at its peak level before the decay cycle begins. This setting would define the sustain qualities of a sound but is not to be confused with the "sustain" level of an ADSR (see page 67).

Figure 6.35 shows the "Attack-Release" or "AR" type of EG. The difference between this and the "AD" is that the AR is not allowed to *complete* its attack if the gate is not present, or to *begin* its decay cycle until the gate voltage is low. If the timing pulses come from a keyboard, this means that the envelope will sustain at its maximum voltage until the key is released, at which point the programmed decay cycle begins. The Buchla 100 and 200 Series Attack Generators and the 200 Series Quad Function Generator have front panel switches which tell the circuit whether or not to respond to the gate or sustain information, although with this module the attack will not be interrupted.

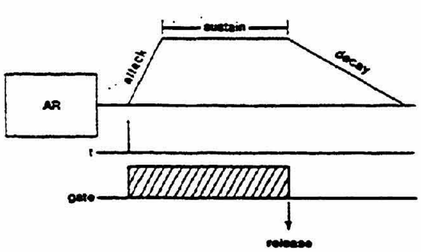

Figure 6.35. "Attack-release" envelope generator

In the "sustained" mode, the envelope will not decay until the gate is released. In the "transient" mode, the sustain time is preprogrammed and will not depend on gate duration. On most designs the sustain time will continue to evolve even if the AR is being held in sustain by a gate. When the gate is released and the sustain time has gone past its setting, the envelope will begin to decay. Extremely short duration sounds and interesting "clicks" are almost impossible to achieve if an EG is reading the gate information—especially if from a keyboard.

Examine the patch diagram in figure 6.36. A keyboard is controlling a VCO whose output is split into two parallel VCA's. Each controlling EG is triggered by the keyboard pulse. EG 1 is in the transient mode with a rapid attack and decay (about .02 milliseconds). EG 2 is in the sustain mode, so that its output voltage will stay high as long as a key is depressed. The signal from VCA 1 will be short clicks of sounds with the pitch identity depending on the frequency. Low frequencies have to be sonic longer than high frequencies, as it takes a crtain number of "cycles" before our ear registers a definite pitch. This will probably be more effective with a rich waveshape. Since EG 1 does not register gate information, the envelope will always be the same length, independent of gate time or how long the key is depressed. EG 2, however, will sustain until the gate is released by releasing the key. The final mixed result is a "click" at the beginning of the sound, accompanied by a sustained sound of the same pitch. You should be able to hold down any key and effect the clicks by touching other keys (without releasing the depressed key). Remember that the pitch will either be the lowest or last key depressed, depending on keyboard design. On some instruments, gate and trigger information are carried by the same patchcord, and with other instruments will have to be separately patched in.

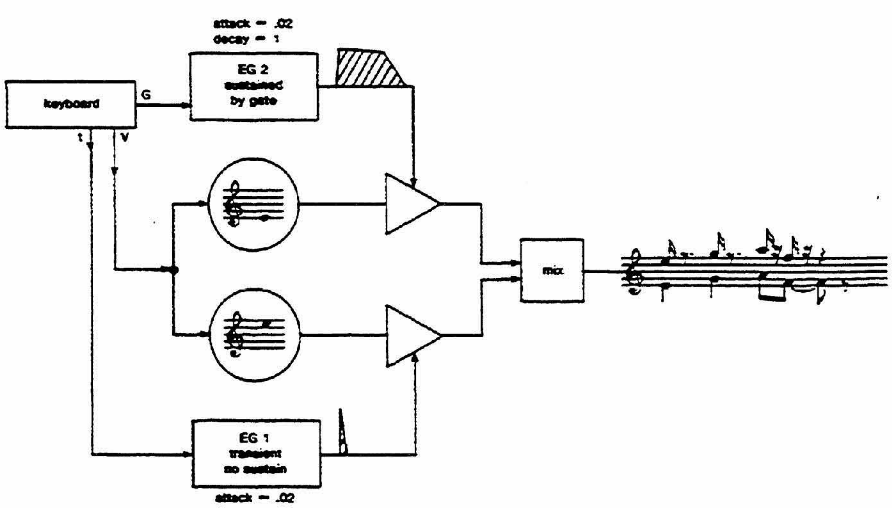

Figure 6.36. Parallel envelopes

Remember that any suggestion appearing at any point in this text can usually be combined with other information provided previously. For a text to document and notate every possible patch would be impossible. It is recommended here that the reader begin a catalogue of cross-referenced patches. Whenever new information pertaining to your resources is presented, add it to the patch book and turn back through the older patches to see how it can be incorporated.

The most common type of EG is the ADSR, such as the Eu 2350 Transient Generator pictured in figure 6.37A. With acoustically produced events, the inertia required initially to get a string, reed, lips, etc., moving contains much more energy than what is required to sustain the event. When driving a car the gas pedal is held down until the desired speed is reached and, at least on flat land, the pedal can be released a bit and the speed will be maintained. This "attack" transient results in a lot of helter-skelter with fluctuating harmonic and non-harmonic content and noise. The ADSR is an attempt to simulate some of this activity with a high magnitude attack transient. When triggered by an external pulse, the envelope generator will produce a voltage which rises to a maximum DC level with a rise time as fast as 1 millisecond or as slow as 10 seconds, depending on the design. This is the "A" or Attack stage. As soon as the voltage level has reached maximum, it begins an "initial decay" which is also manually set to last between 1 millisecond and 10 seconds. During this time the initial decay voltage approaches a manually set "sustain" *level* that may range from zero DC to the system's maximum level. This sustain level will be maintained until the gate voltage is released. The sustain control is not a temporal device like the rise time and initial decay pots, but is used to determine the amount or magnitude of the sustain voltage. The time period of the sustain voltage is dependent on the length of the applied trigger pulse. After the trigger voltage is released, there is a "final decay" or "release," "R," which is also manually preset for any time period between 1 millisecond and 10 seconds. All four events automatically take place in sequence upon receiving a single timing pulse. Figure 6.37B is a graphic representation of a generated ADSR envelope.

Getting the right kind of responses from various keyboard timing pulses takes some thought and practice. The music in figure 6.38 requires a series of envelopes with differing decays. It is, of course, usually not practical to play the release pot manually while playing the keyboard. The solution here is to know that the *initial decay* in most ADSR's is terminated with the release of the gate voltage. By holding down a key, the attack and initial decay will cycle as programmed. If the key is just tapped, the initial decay voltage will immediately fall to the sustain level, no

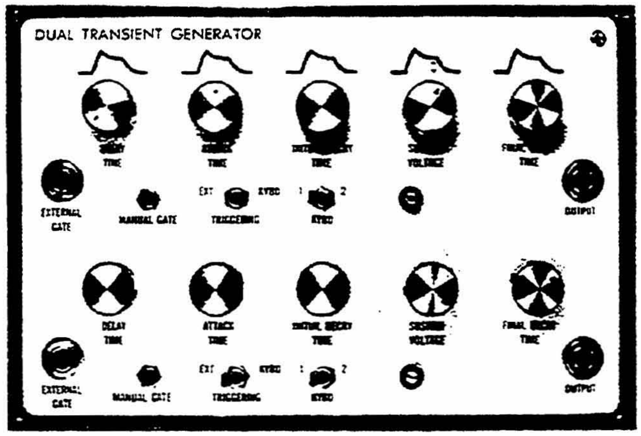

Figure 6.37A. Transient generator (Courtesy Eu Systems, Inc. Used by permission.)

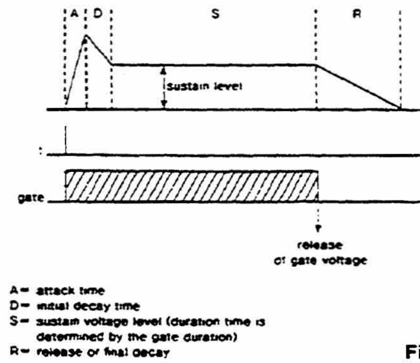

Figure 6.37B. The ADSR

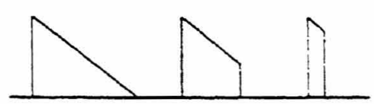

Figure 6.38. Envelope articulations

matter where it is in its cycle. To produce the articulations notated in the example, set the functions as follows: attack = minimum; initial decay = the longest required note value; sustain level = 0 volts; release = minimum. As shown in figure 6.39, a sustained key will let the initial decay evolve through its entire cycle, in effect simulating an AD function. If the key (gate voltage) is released at any time before the cycle is complete, the voltage will immediately drop to zero. In this way one can approximate piano-like articulations. Remember, this technique only works if the initial decay can be interrupted by the release of the gate.

More real-time variation in envelope shapes can be accomplishd by voltage control of all the functions. These manipulations are usually only possible on larger instruments, but they certainly are worth the extra expense for the meticulous composer or performer. Eu Instruments manufacture an adjunct to their envelope generator, called the 2355-Voltage Controlled Transient Generator Input Unit. It is connected to the

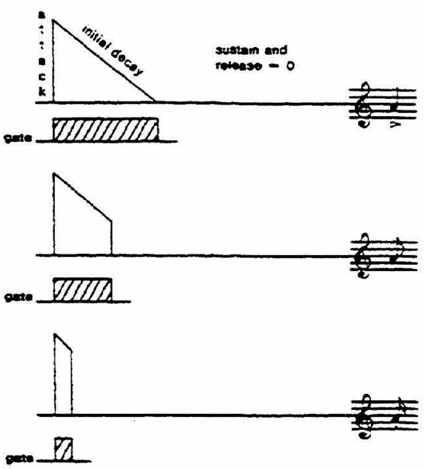

Figure 6.39. Various gate durations used to vary articulations

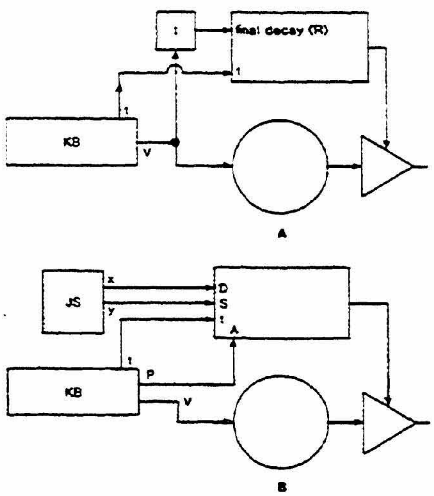

Figure 6.40. ADSR voltage controlled parameters

envelope generator by internal connectors. Input voltages to the module may be front panel attenuated as needed and then summed with the envelope generator's offsets. Thus any or all of the voltage functions may be controlled dynamically. One very common application is to set the EG for short envelopes and use an inverted form of the voltage going to the VCO (see figure 6.40A). Since low notes require relatively longer envelopes, the low voltage producing low pitches is inverted to a high voltage and produces proportionally longer decays. Other voltages could be used to control other parameters as in figure 6.40B. Here the X axis of a joystick is patched to the initial decay input, the Y axis is patched to sustain level input, and some kinesthetically generated keyboard voltage (velocity, pressure, etc.) is inverted to control the attack. This is probably a hypothetical patch for the resources of most players, but it does point out the possibilities. A sharp keyboard attack produces a short attack, low notes have corresponding longer final decays, and the overall loudness and initial decay can be controlled simultaneously by the joystick.

The applications of trigger delay will come up in future patches but should be briefly discussed here in terms of delayed onset times. All of the above examples involve relatively slow time patterns. In actual usage, envelope generators are usually programmed to function at very rapid speeds. The onset behavior or attack of most acoustical events has different effects on the various components of a wave. Figure 6.41 shows the amplitude characteristics of the fundamental and first four overtones in the first 130 milliseconds of a violin attack (at a frequency of 435 Hz). It can be seen that the fundamental has a comparatively slow rise time when compared to the third overtone. The third overtone also has a very rapid initial decay time. In the electronic creation of attacks, the individual control of these various characteristics can be readily directed with an envelope generator reacting on a voltage controlled amplifier. Observing the many amplitude changes in figure 6.41, one can imagine how an envelope generator with an unlimited number of programmable voltage levels can be of great use in the control of transients. The various voltage levels of the initial rise times are achieved with the use of a voltage attenuator or a control voltage processor (see page 37). By controlling a bank of envelope generators from a single trigger pulse, all of the components in figure 6.41 can be controlled. The delayed onset of the fifth overtone is accomplished by using a "trigger delay." A pulse would directly trigger four envelope generators and a trigger delay would initiate the fifth overtone about 22 milliseconds later (figure 6.42). Each envelope generator would be programmed to produce the various rise, duration, and decay times for the particular wave component it is controlling. The trigger delay may be a function of the envlope generator, as with Eu Instruments, or may be accomplished through a delay module as on the Moog studio instruments.

The Buchla 281 Quad Function Generator (figure 6.43A) has a feature which would be quite difficult to patch externally (see figure 6.43B). By means of a switch, the top and/or bottom two function generators are put in "quadrature." In essence this means that the two functions are 90° out-of-phase with each other, independent of individual time constants. When a timing pulse is received, FG 1 begins its attack. When the attack peak is reached, FG 2 begins its attack. FG 2 is then not allowed to begin its decay until FG 1 has ended its decay. The two envelopes are available as separate outputs or they may be mixed internally. The Buchla 281 also issues an output trigger when the decay reaches 0 volts. This trigger may be patched to any external module and/or patched by means of a switch back to the trigger input for cyclical firing. With a patch cord one can also attach the output trigger to the input of the next FG. All four FG's can be

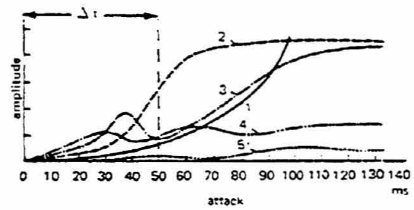

Figure 6.41. Violin attack at 435 Hz (Amplitude characteristics of a violin attack from *Music, Sound and Sensation: A Modern Exposition* by Fritz Winckel, Dover Publications, Inc., New York, 1967. Reprinted through permission of the publisher.)

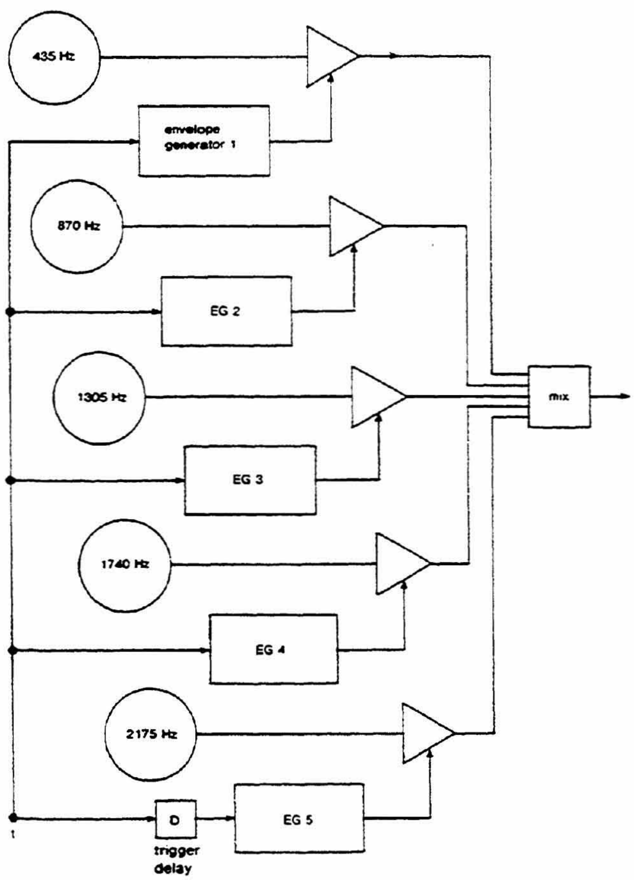

Figure 6.42. Transient waveform synthesis with trigger delay

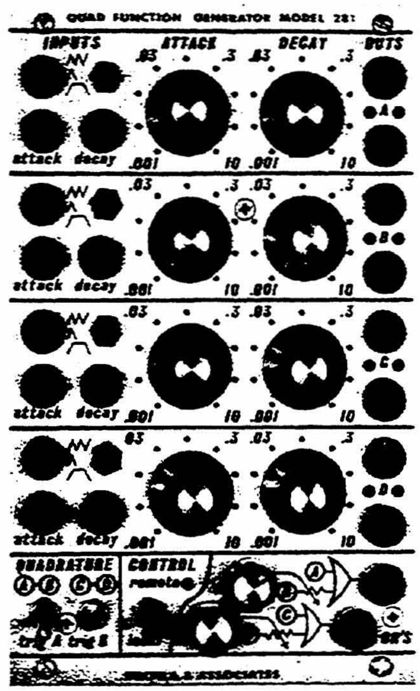

Figure 6.43A. Buchla Series 281 Quad Function Generator

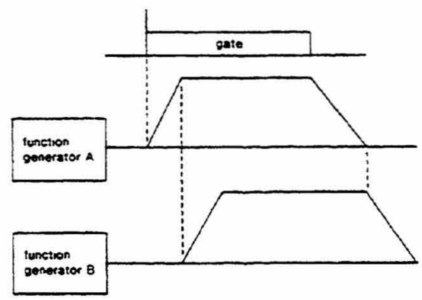

Figure 6.43B. Quadrature relationships

patched to cycle and sequence so as to produce a multitude of envelope relationships. These patterns can be set up with any number of envelope generators with output triggers.

The following are some ideas for envelope patches, including some function processing possibilities:

A. A single EG to control timbre and amplitude simultaneously.

B. Independent control of timbre and amplitude with two EG's. In this patch be sure the attack time for the VCA is faster than the attack time for the VCF, or the initial filtering effect will not be heard. In these patches use an inverter on the output of any of the envelopes patched to the filter.

C. The filter and VCA are put in parallel and remixed. In this way the final gain is not entirely dependent on the filter or VCA, but is a combination of both spectrum and amplitude.

The following are examples of multiplication patches (if the reader does not have AC/DC coupled VCA s for multiplication, it may help to turn to page 37 and read about specialized processors). If a control voltage multiplier is not available, put the audio signal through two VCA's in series (compare figures D and E).

D. This is a diminuendoing echo effect. The LFO sawtooth or a recycling short envelope is multiplied by a longer envelope. The same effect can be producd with two VCA's in series, one with the repetitive function and the other with the primary envelope. (See figure E.)

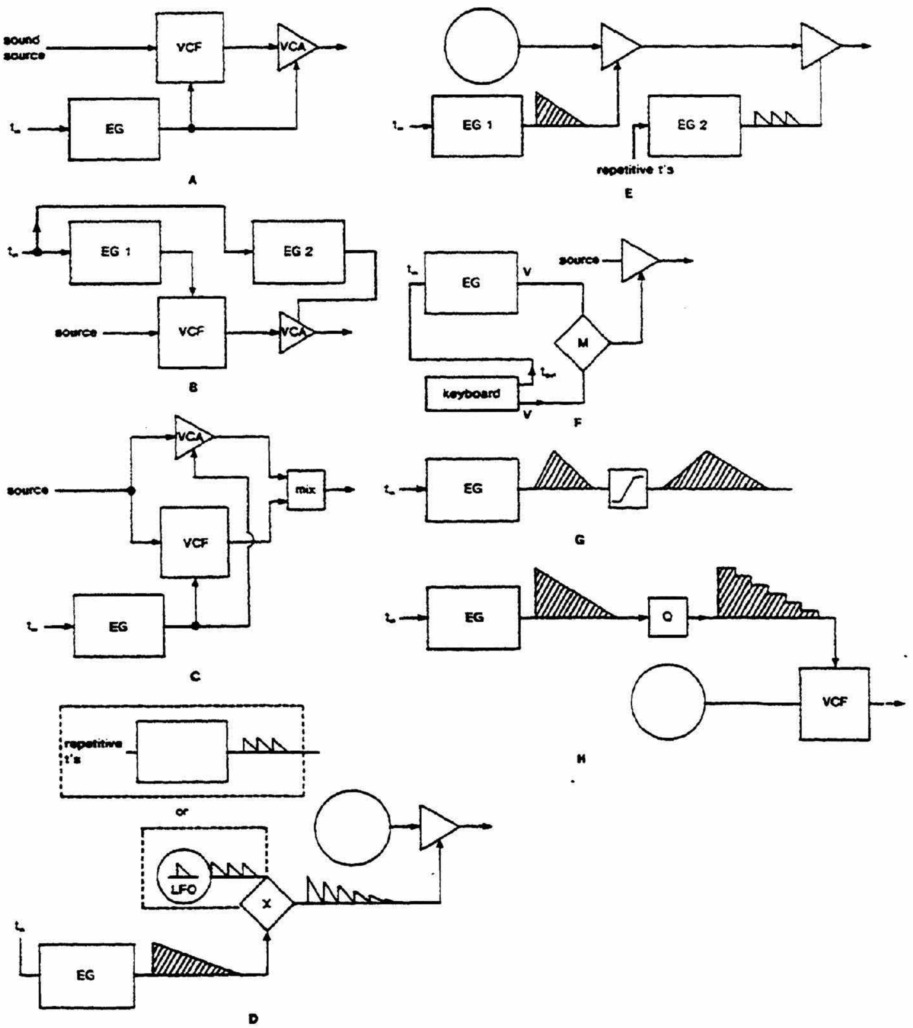

Figure 6.44. Envelope generator applications

F. An envelope's overall magnitude can be controlled by multiplying it with another voltage. Here a pressure or velocity voltage from the keyboard is used, so hard or fast key depressions determine the total magnitude of the envelope—thus harder key articulations produce louder sounds.
G. The attack and decay of an AR function is extended by integration. Take care here that integration time is not so slow that it prevents the voltage peak from being reached.
H. A variation on patches A, B, or C, in which the spectral sweep can be quantized into harmonic "steps."

Sequencers. The *sequencer, sequential voltage source, sequential controller,* etc., is a programmable memory of non-fluctuating control voltages which can be taught to handle a variety of tasks. Since the sequencer has a multitude of applications, it is probably the most complex of all voltage sources. The main function of the sequencer is to supply the composer with

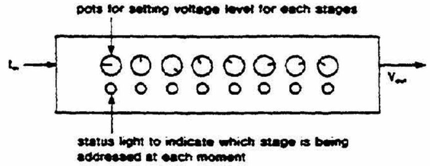

Figure 6.45. Basic sequencer

a repetitious stage of preset voltages. The various designs may allow for as few as 2 or as many as 256 individual DC voltages to be produced in sequence at varying speeds. The basic design for a sequencer is illustrated in figure 6.45. Each individual voltage may be manually set by using the individual voltage pots. By controlling the speed of the sequencer with trigger pulses, it is possible to produce the voltages at a constant rate, or the rate may be changed by varying the speed of the control trigger. The most commonly used source of trigger pulses with the sequencer is the timing pulse generator or a clock oscillator, because the rate of the pulses can be controlled manually or by voltage control. Some sequencers are equipped with an internal speed control

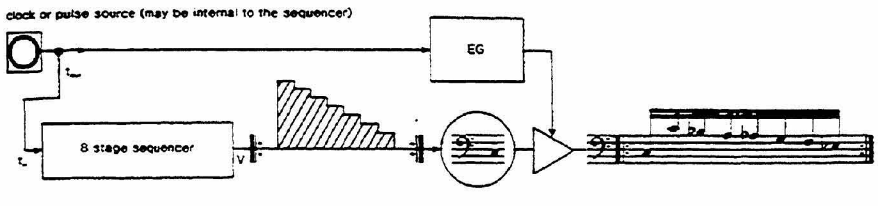

Figure 6.46. Sequencer ostinato

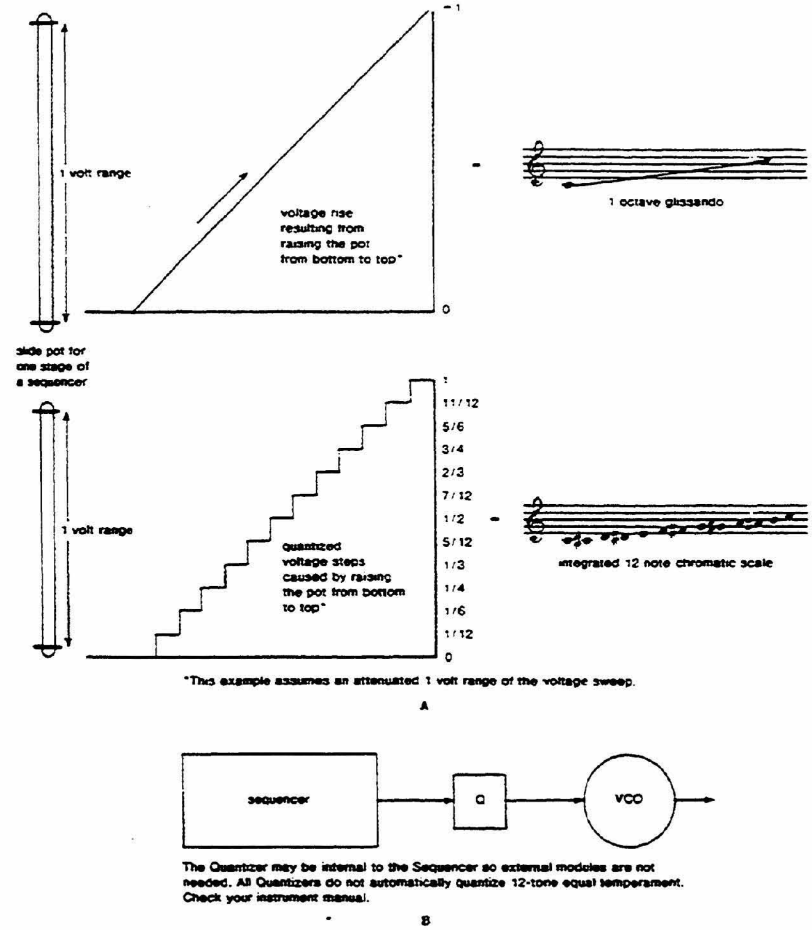

Figure 6.47. Quantized sequences

and do not necessarily have to depend on external trigger pulses.

An ostinato passage, as in figure 6.46 would very easily lend itself to sequencer applications. The sequencer would be patched to a voltage controlled oscillator and each increment of the sequencer would then be set to produce the desired frequency of the ostinato passage. If the tempo is ♩ = 180, the 32nd notes must be at a speed of 24 per second. The sequencer can be programmed to fire at this rate by supplying it with trigger pulses with a period of .4. The sequencer may continue to produce this pattern for any number of repetitions, or it may be programmed to stop after the first repetition. Sequencers with internal speed controls will produce the same tempo by manual setting of the pot.

The voltage offset for each increment is usually an analog pot. It is continuously variable throughout its entire voltage range. There are several models available which feature quantization, such as the EML 400 Series Sequencer and the Buchla 248 Multiple Arbitrary Function Generator. The quantizer will divide the infinitely variable pot voltage into discrete voltage levels, usually linear voltage divisions to be used in various kinds of equal interval tuning. By quantizing a bank of controls, equal temperament tuning can be accomplished faster and more accurately (see figures 6.47A and B).

The programmed voltages in a sequencer bank are non-fluctuating. If controlling a VCO, it would normally be impossible to glissando between pitches. Voltage slides can be produced by using an integrator. The sequencer voltages are processed through the in-

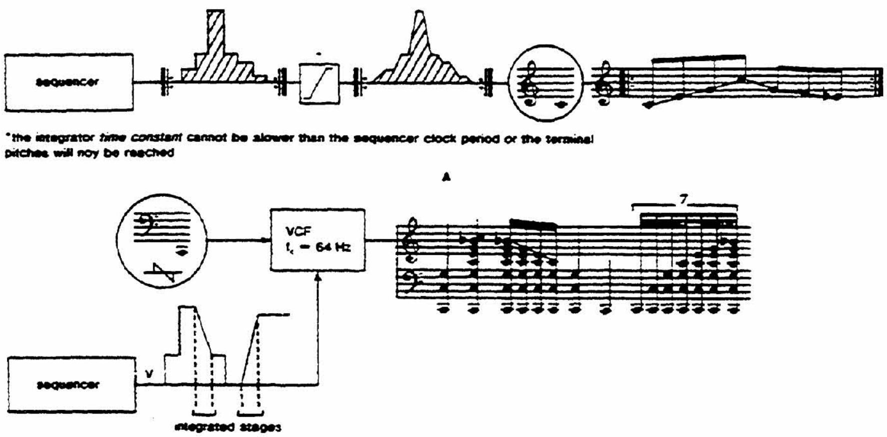

Figure 6.48. Integrated sequencer patterns

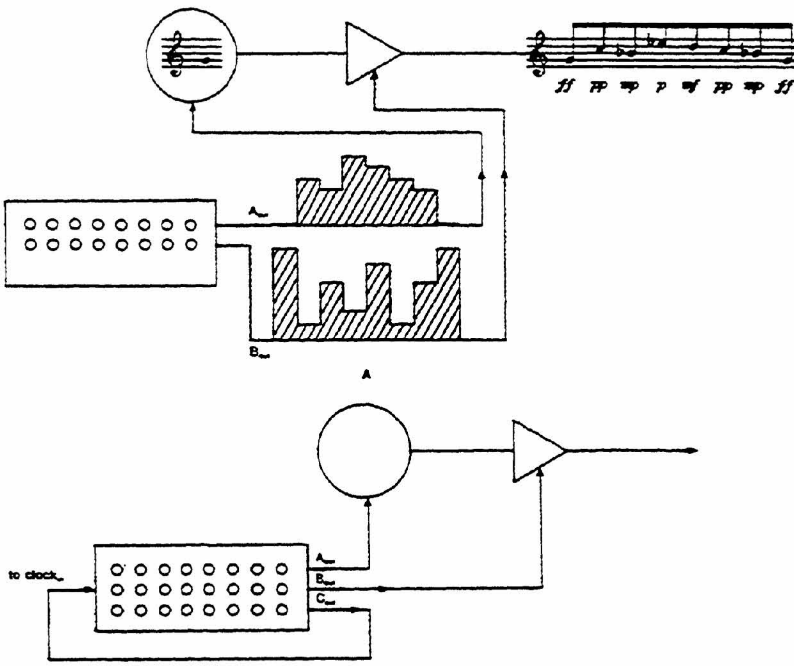

Figure 6.49. Multi-bank or matrix sequencers

tegrator and the appropriate time constants are set (see figure 6.48). The Buchla 248 provides the option of individual increment selection for integration. In this way some pitches can have accompanying glissandi and others can be non-glissandi. If applied to a VCF, certain increments would cause timbral sweeps while others would produce abrupt timbre changes.

Just as with the voltage keyboards, the sequencer may have from one to three (or more) banks of individually controlled outputs. This is sometimes called a *matrix sequencer*. Each bank can have a different sequence of preset voltages, but the firing speed for all three banks will remain constant. When the first increment for the first bank fires, so does the first increment for all of the other banks. Whether or not the composer chooses to utilize the other banks is his own decision. With multiple banks it is possible to program any sequence of frequencies with one set of pots and control the individual amplitudes with another set (figure 6.49A). By using a third output, it is possible to program very complex rhythmic patterns. Patching an output to a sequencer's speed control, via a timing pulse generator or its own internal firing control, the player will change each progression to the next increment, with the speed proportional to the voltage of that particular increment (figure 6.49B). As an example, the relatively simple pattern below could be programmed in the following manner:

The first increment on the sequencer would be set to produce a voltage which, when applied to the sequencer's speed control, would advance to the next increment at a rate of once every 2 seconds. The second and third increments would have to produce a higher voltage which would advance the sequencer at a rate of twice in 1 second, and the fourth increment would have to advance the sequencer at a rate of every 1½ seconds, continuing in the same manner for the time value of each note. If this process were being controlled by the third bank of voltages, with frequency controlled by the first bank and amplitude by the second, the three basic parameters of musical composition could be subjected to sequential programming.

Sequencers are particularly, but not exclusively, applicable to serial techniques because of the possibility of transforming any parameter to a voltage and controlling it with a sequential (serial) source.

The standard design of sequencers today consists of either 8, 12, or 16 increments. These are only arbitrary numbers decided upon by the manufacturers and are of no special benefit to the composer. By using an "increment switch," it is possible to fire any number of successive increments in the bank. If a composed wishes to have only five increments in a particular pattern, he can set the increment switch to "5" and only the first five voltages would fire as a repetitive pattern. Another method of increment selection is with individual switches that allow for any number of individual voltages to be eliminated from the sequence. By switching out the unwanted increments, the composer is not always forced to use the preset successive voltages. In certain designed sequencers, this switching may be manual or controlled with triggers.

Two other techniques of incrementation available on some instruments are *pulse address* and *analog address*. With pulse address, each increment will have an accompanying pulse input. When a trigger is set to an increment's pulse address input, the sequencer will switch to that increment. The composer may then program a series of sub-sequences and call them up as needed. Figure 6.50 illustrates one possible application. A 16-stage sequencer is programmed for four different arpeggio patterns to control a VCO. The individual pulse outputs from another sequencer are used to define which sub-sequence is addressed. The addressing sequencer can then be set for the desired clocking rate or may be clocked manually.

Analog address allows a control voltage level from any source to select a sequencer increment. For example, a low voltage from a keyboard would select a low increment, and a higher voltage would select a proportionately higher increment. In this manner a series of sub-sequences could be programmed and addressed in any order. Analog address can be a useful method of re-tuning an equal-tempered keyboard. Patch the keyboard voltage output to the analog address input and see what keys address what sequencer increments. Ideally key #1 should address increment #1, key #2 address increment #2, and so on. Now use the sequencer output to control a VCO. Each increment can then be tuned to any desired frequency and twelve-tone equal-"tamperment"[5] can be defeated.

Another application of sequencer incrementation is *random address*. Some designs such as the ARP 400 have this option built into the circuit. By switching from "sequential" to "random," the sequencer will switch from increment to increment in random order. This can be very useful when the composer wishes to establish a file of specific voltages and then have the instrument randomly pick from that file. The sequencer could be tuned to a diatonic octave scale and then randomly access diatonically related pitches from that scale—a possibility for "random pandiatonic music"? The selection of increments will be at the rate determined by the clock. This parameter could be given a correlating randomness by using the output of the randomly selected increments to control the clock speed.

5. A lovely term coined by composer Lou Harrison.

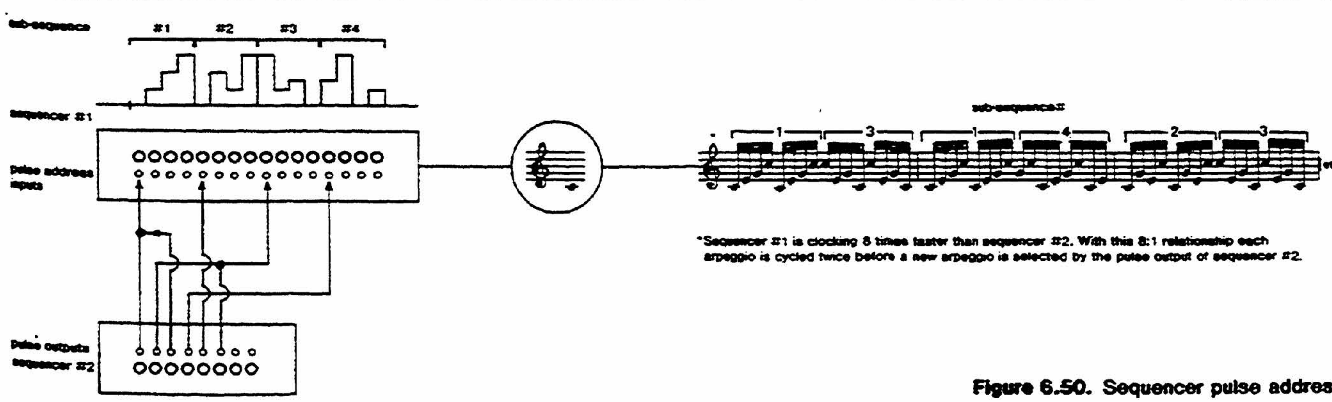

Figure 6.50. Sequencer pulse address

The term "correlated" random is used because it is assumed that the sequencer will also control another parameter such as pitch. If a voltage controls both pitch and duration of that pitch, there is an established and predictable relationship. If the clock is an LFO, a high random voltage will produce a high pitch and a correspondingly shorter duration (higher clock speed). If the clock is of the "pulser" genre, a higher voltage will produce a longer duration as a high voltage will result in a long period. To adjust an LFO to behave like a pulser, invert the incoming control voltage,—and vice versa. Other methods of random address will be discussed in connection with their application of random voltage sources (see page 83).

The number of increments in a bank can be extended if there are multiple banks and if there is the availability of an electronic switch. A 16 × 3 matrix sequencer can be turned into a 45-increment sequencer by using the patch in figure 6.52. The output voltages from the three banks are taken to the inputs of an electronic switch. The trigger output of the last increment is taken into the "sequential switching input" of the switch. Every time the sequencer fires trigger #16, the switch will sequentially route the next control voltage bank to its output.

The sequencer may be turned on and off by two different methods, depending on its manner of control. If it is being triggered by pulses from an external source, it may be stopped simply by stopping the source. Start-stop control of the timing pulse generator is extremely useful in this way. If the TPG is in the single pulse mode, the sequencer may be fired at will by the manual depression of the firing button. Sequencers with internal firing and control have self-contained trigger inputs for starting and stopping. The individual increments may also have a switch which will stop the firing action when that particular increment in the series is reached. One application would be to have one sequencer start and stop another. In figure 6.53 both sequencers' controls are taken to a VCO (other parameters are also dealt with in the patch—analyze them!). Sequencer "A" is set for 8 stages and supplies control logic for an arbitrary series of pitches. The trigger output from increment 8 starts sequencer "B", which is clocked at a faster rate and

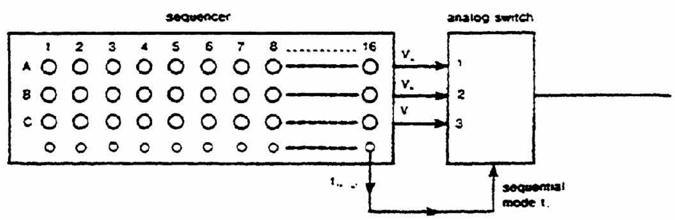

programmed to output a pentatonic scale function. The first increment of sequencer A sends a trigger to stop sequencer B. The function is as follows: A produces a sequence of pitches. At the eighth event, a trigger is sent to start B (clocking at its own rate), thus imposing a pentatonic scale on the last pitch. When A recycles back to increment #1, a pulse is issued to stop sequencer B.

Sequencers with *digital memories* are often designed to "read" externally generated voltages and store them for future recall. Manufacturers are reluctant to call such instruments "sequencers," since they usually are capable of wider applications than the initial sequencer concept. One such instrument is the Roland MC-8 MicroComposer; the EMS AKS and 100, Sequential Systems Instruments, Eu 2500 modules are other examples. With read-in capabilities, external voltages, their durations and timing pulses are turned into numerical information by what is called an ADC or analog-to-digital converter. Once in numerical form, they are stored in a digital memory. Application of timing pulses from a clocking device then reads out the numbers to a DAC or digital-to-analog converter which converts the information into the original control voltages. Since the voltage levels are stored as numbers, various types of information processing, such as multiplication and division, can be applied. As the voltages are stored as numbers, they can be accessed or read out at different rates without changing their value. Manipulation or voltage control of the clock will only affect the rhythm or speed of retrieval and will not alter the value of the outputted voltage.

Digital memories are as varied and offer as many specialized features as there are manufacturers, and

key # 1	addresses	sequencer	stage	# 1	tuned to a	1/1 ratio	C
key # 2	addresses	sequencer	stage	# 2	tuned to a	21/20 ratio	C#
key # 3	addresses	sequencer	stage	# 3	tuned to a	9/8 ratio	D
key # 4	addresses	sequencer	stage	# 4	tuned to a	32/27 ratio	D#
key # 5	addresses	sequencer	stage	# 5	tuned to a	14/11 ratio	E
key # 6	addresses	sequencer	stage	# 6	tuned to a	4/3 ratio	F
key # 7	addresses	sequencer	stage	# 7	tuned to a	10/7 ratio	F#
key # 8	addresses	sequencer	stage	# 8	tuned to a	3/2 ratio	G
key # 9	addresses	sequencer	stage	# 9	tuned to a	11/7 ratio	G#
key # 10	addresses	sequencer	stage	# 10	tuned to a	27/16 ratio	A
key # 11	addresses	sequencer	stage	# 11	tuned to a	16/9 ratio	A#
key # 12	addresses	sequencer	stage	# 12	tuned to a	40/21 ratio	B
key # 13	addresses	sequencer	stage	# 13	tuned to a	2/1 ratio	C

12-Tone Pythagorian Tuning. This is only an academic model. To accurately tune this scale one would have to refer to a tuning chart and use a frequency meter.

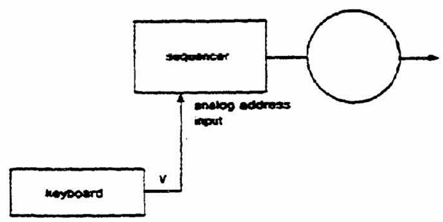

Figure 6.51. Sequencer analog address for "re-tuning" a keyboard

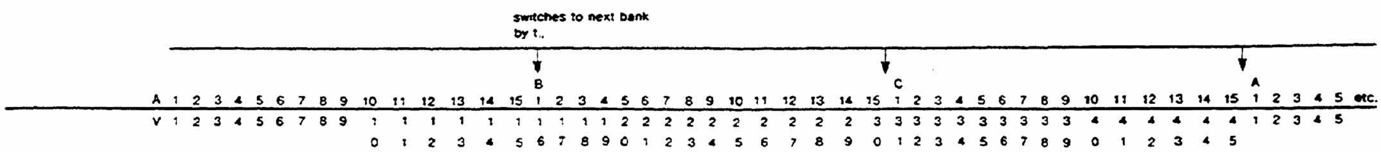

Figure 6.52. Sequencer increment extension with an analog switch

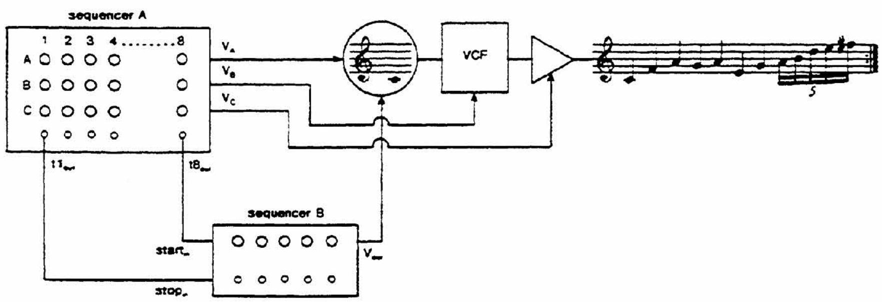

Note that sequencer B must be clocked five times faster than sequencer A so when it is turned on it's five voltages can be imposed on the one voltage of increment 8 of sequencer A.

Figure 6.53. Sequencer "start-stop" patch

therefore it would be impossible to cover every option in this context. There are, however, some basic capabilities which should be understood by the prospective purchaser and user. Most digital memories are volatile. This means that when the power is shut off, the information stored in memory is erased. Microprocessor-based instruments have the possibility of "dumping" the stored information into a long-term storage device such as regular audio tape, floppy discs, etc. With the increasing accessibility of digital storage, many home-built instruments and a few commercial instruments are employing PROM storage (Programmable Read Only Memory). A PROM is a small integrated circuit on which the user or design can permanently store a sequence of information that is commonly used. This can be non-traditional tuning for keyboards, envelope functions, functions for panning sound (see chapter 13), or whatever. Digital memories and many analog memories do not have to be read in sequential order, so that the information may be read out in any order (see analog and pulse address, page 73). A great advantage to PROM storage is that they are non-volatile, and thus the information is not lost when the instrument is turned off. Erasable PROM's (EPROM) can be used for long-term storage and reprogrammed as desired.

One problem with digital storage can be the tempo and rhythm. Memories are not infinite. The number of events which can be stored is usually some binary number such as 256, 512, 1024, etc. Rhythm and rests are stored events, and depending on design, can use up a significant amount of that memory. What we shall call design "A" presents the problems. In this format a clock rate is set, for example, at 10 Hz. Every tenth of a second the memory looks at whatever voltage is present at its input and stores it. Everything is satisfactory until information is given faster than every tenth of a second, such as rapid trills (see figure 6.54). The memory will only be able to store those portions of the trill coinciding with the tenth of a second read command. The seemingly logical solution is to speed up the clock so it can get all of the information. So we now set the clock for perhaps 30 Hz. We do get the trill but the memory is being clocked through its total capacity at a faster rate so the total time is significantly shorter. Using this type of memory then calls for a balanced compromise of information rate and clock speed. Simple measured sequences use less memory and provide longer storage times, while more complex rhythms at faster tempi result in shorter storage times.

With design "B", rhythm and tempo do not impose restrictions on sequence length. In this method two separate words of information are stored for each event. The ADC stores the voltage information and the number of clock counts associated with each voltage. The clock is free running at a high frequency and external to the actual memory. This is exemplified in figure 6.55. Clock speeds usually run at higher rates, but let's hypothetically assume that the reference is sending out clock pulses at a frequency of 600 Hz, or expressed another way, the memory can make 600 observations each second. At a tempo of ♩ = 60, a quarter note is equivalent to 600 counts, an eighth note equal 300 counts, a sixteenth note equals 150, each division of a quarter note triplet receives 200 counts, etc. As the player reads in the information, the pitch information is put in one *register* (a place where digi-

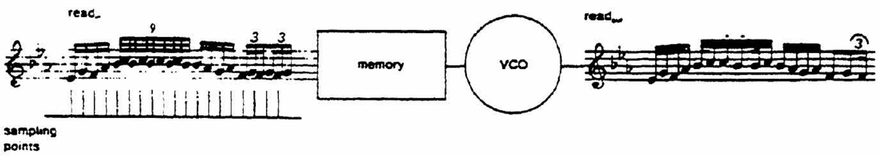

Figure 6.54. Digital memory

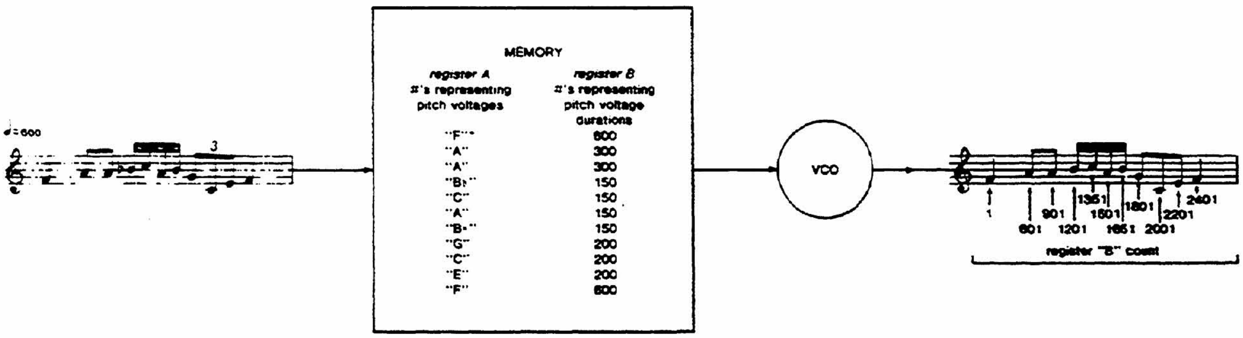

*Remember that the memory stores numbers which represent a voltage—they don't store the actual pitch!

Figure 6.55. Digital memory

tal information is stashed), and the duration or number of counts that the voltage is to be present is put in a separate but parallel counting register. Register A now contains a series of digital words to be used as pitch information without using that memory for any rhythmic information. Register B has a string of associated numbers that will be translated back into durations for each voltage. In reading the information back, the first pulse of the clock calls out the "F" voltage and that voltage will be present at the output for 600 clock counts. On clock count 601, the memory switches to the second address, putting out the "A" voltage and will hold that voltage for 300 counts, etc. The clock is only putting out pulses so that it has an unlimited number; the counting is being done by the memory, and hence the durations can be of virtually any length and the number of possible stored events is not eaten into. These types of memories are finite (again usually a binary number), but the possible number of storable events is not changed by tempo or durations. The articulation of a note is controlled by a VCA and an envelope generator, as is usually done with analog sequencers. Consequently the digital memory must produce timing pulses whose period is equal to the period of each voltage change—again the same as analog sequencers.

Timing pulse accessibility on a sequencer greatly defines its range of applications, and an openly designed sequencer may be looked at as a programmable timing pulse source. The way sequencer pulse outputs are accessed varies from instrument to instrument but can be put in three general categories: *individual pulse outputs, bus outputs,* and *multiple bus outputs.* These three access methods are illustrated in figure

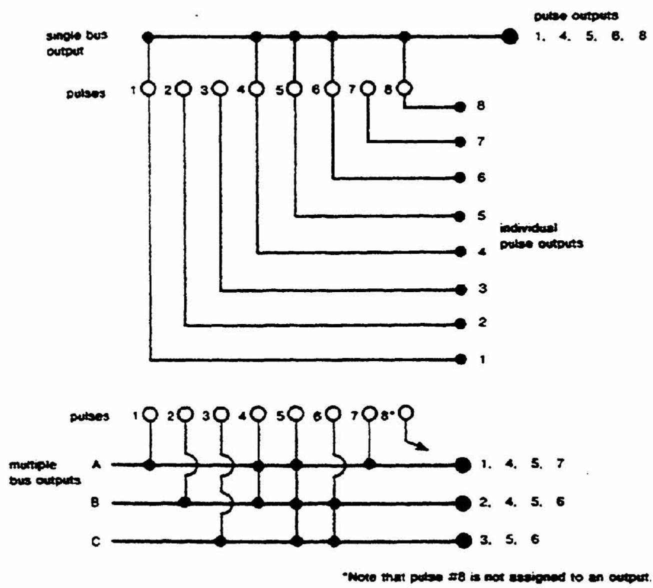

Figure 6.56. Sequencer pulse outputs

6.56. Figure 6.57 illustrates how two sequencers can be used to structure polyphonic events. Sequencer 1 produces controls to generate an eight note ascending scale (VCO 1). On increments 1, 3, 6 and 8 a trigger is taken to *start* sequencer 2. This sequencer is clocked at a much faster speed and generates a four note embellishment figure. All of sequencer 2's triggers are used to fire an envelope generator so that the pitches are heard only when the sequencer is running. The trigger from increment 4 is taken to the *stop* input, therefore the sequencer will stop on the last stage.

The bus output can be set up in two ways. The pulses may be hardwired to the output as in figure 6.58A, or may be user-switched as in figure 6.58B. In

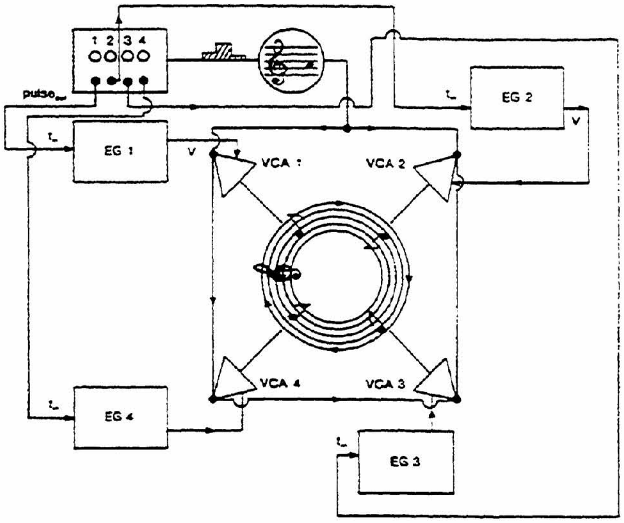

A—Pulsed Panning. This is a visually complex patch. Analyze all audio trigger and control routes carefully.

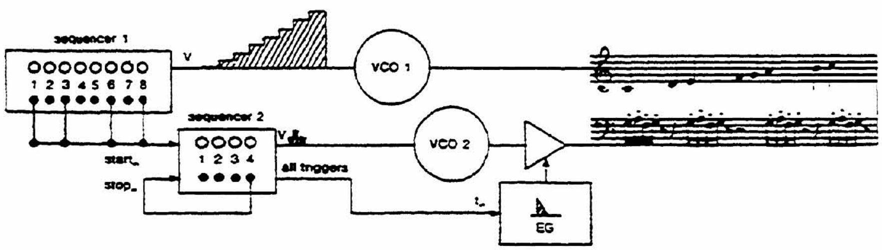

B—polyphonic events with two sequencers

Figure 6.57. Sequencer pulse output applications

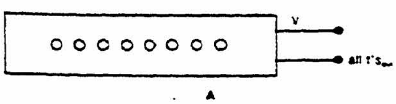

A

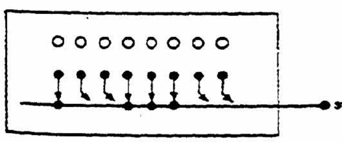

B

Figure 6.58. **Hardwired "all" bus and "switched" bus**

the "A" format, a pulse is issued to a single output with each incrementation so that other functions can be initiated with *each* sequencer event. In format "B," the performer can attach whichever pulses he chooses to the output. This is useful in creating irregular pulse division of the clock rate to generate mixed time structures as illustrated in the accompanying patch (figure 6.59). Here the clock is set to a period of .25 (¼ of a second) which we can consider to be a sixteenth-note at a tempo of ♩ = 60. With the sequencer set for 16 stages, pulse outputs 1, 5, 10, and 13 are taken to EG 2. The clock pulses (or a hardwired "all" bus output from the sequencer) fires EG 1 which produces the generalized envelope. The output signal is taken to a second VCA which is offset about 75%. The switched bus output fires EG 2 on the "downbeats" of each measure, generating a shorter envelope that opens VCA 2 to full gain, creating a louder sound at those points. This patch can be simplified by using a control voltage mixer VCA with summing control inputs so that both envelopes can be patched to a single module.

A switchable bus may be simulated by attaching the selected pulse outputs together. Depending on the patching format, the pulse patchcords may be stacked together (as with the Pomona plugs used on the Buchla instruments), or they may be attached to a "multiple,"[6] as illustrated in figure 6.60.

Multiple buses or a "bus matrix" offers more possibilities. With this format any pulse may be attached to any available outputs. The number of individual buses differs with each instrument, but a common number is three. With most multiple buses, a pulse is switchable only to one of the available number of outputs. However a few designs make it possible to attach a pulse to any number of the available outputs. The decision to do this is usually conditioned by cost

6. A multiple or "mult" is simply a collection of jacks all wired together. This is an essential item for any studio; if you don't have one, have one made (or do it yourself).

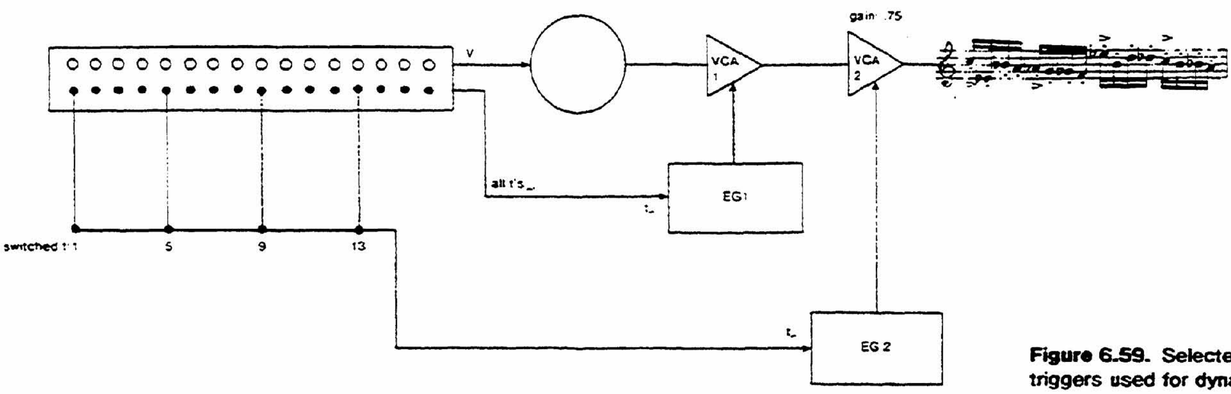

Figure 6.59. Selected sequencer triggers used for dynamic accents

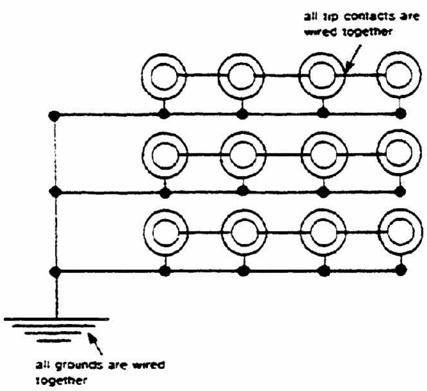

Figure 6.60. Multiple

and/or front panel space. One can always replicate multiple bus attachment by the use of cord stacking or multiples.

An application of multiple pulse buses is an expansion of the previous patch and is illustrated in figure 6.61. With the availability of three buses, each can be programmed for different metric accents. Bus one carries pulses 1, 4, 8, 14, and 19, creating a 3/4, 4/4, 6/4, 5/4, 2/4 pattern; bus two carries pulses 1, 5, 9, 13, and 17, creating a continuous 4/4 pattern; bus three articulates a 5/4 pattern with pulses 1, 6, 13, and 16.

Sequencer pulse outputs can be used to generate higher level structures by being used to stop and start other sequencers, fire envelope generators, route voltages via electronic switches, etc. The range of applications is limited only by the imagination of the musician. The Coordinated Electronic Music Studio (CEMS System) at the State University of New York in Albany, designed by Joel Chadabe and Robert Moog, makes extensive use of this type of programming. An excellent discussion of automation with sequencers and Chadabe's own DAISY instrument is contained in "The Voltage-Controlled Synthesizer" by Joel Chadabe.[7]

7. *The Development and Practice of Electronic Music*, Appleton and Perera, eds. (Englewood Cliffs, N.J.: Prentice-Hall, 1975), pp. 168-177.

A control voltage bank itself may be used as a series of timing pulses if you find yourself in need of extra switchable buses. Remember that a gate or trigger is usually just a medium or high level voltage with a sharp leading edge. Patch the control voltage from a sequencer bank to the timing pulse input of a function generator. Turn all the increment voltage pots to 0 and clock the sequencer at a moderate rate. Turn one of the voltage pots up until you get a reaction from the function generator. Although the voltage may not be called a timing pulse, it is of so high a magnitude with a sharp leading edge that it accomplishes the same thing. Each increment can then be tuned to a timing pulse level and the sequencer bank can be used as a switchable bus. If using this "trickery" with Moog instrumentation, the voltage must be used as a "Voltage Trigger" or "V-trig." One case in which this may not work is if two adjacent increments are set at the same voltage magnitude. The difficulty here is that when the sequencer switches from one stage to the next, there is no differentiate leading edge. This can usually be taken care of by having the first of the two increments just above the gating threshold and the next increment slightly above the first. Then when the sequencer switches to the second of the two stages, a leading edge is still produced. This technique is a typical "defeat the system" approach, hence it is important to keep track of the reasoning in terms of instrument structure.

Sequencer designs probably vary more than any other standard electronic music module and application notes accommodating every possibility would be a wasted effort and probably useless to most readers. It is important to be aware of the possible options in design and then try to invent methods to simulate on your own instrument what might not be apparent. The following is a summary of current commercial analog sequencer features which could be considered as bases for experiment.

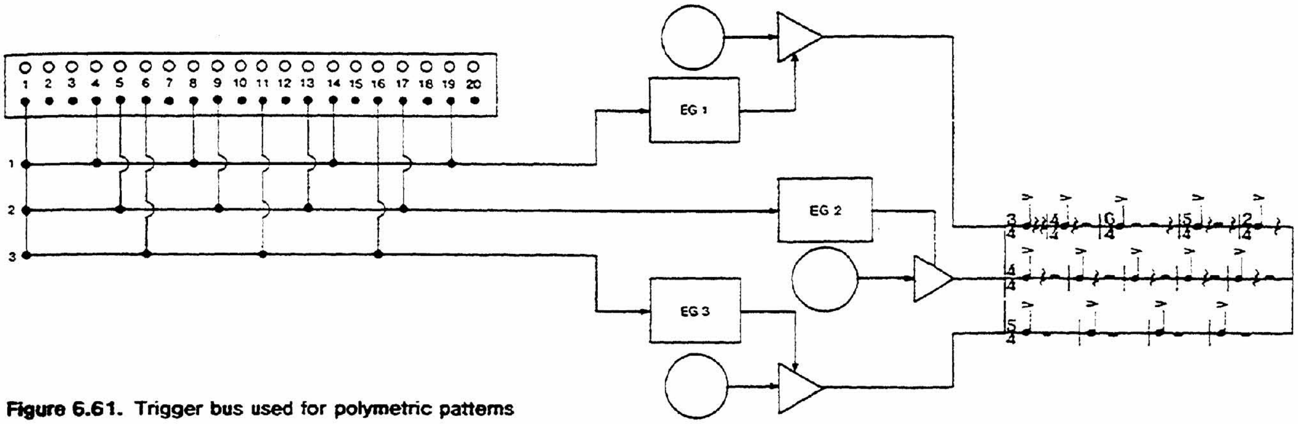

Figure 6.61. Trigger bus used for polymetric patterns

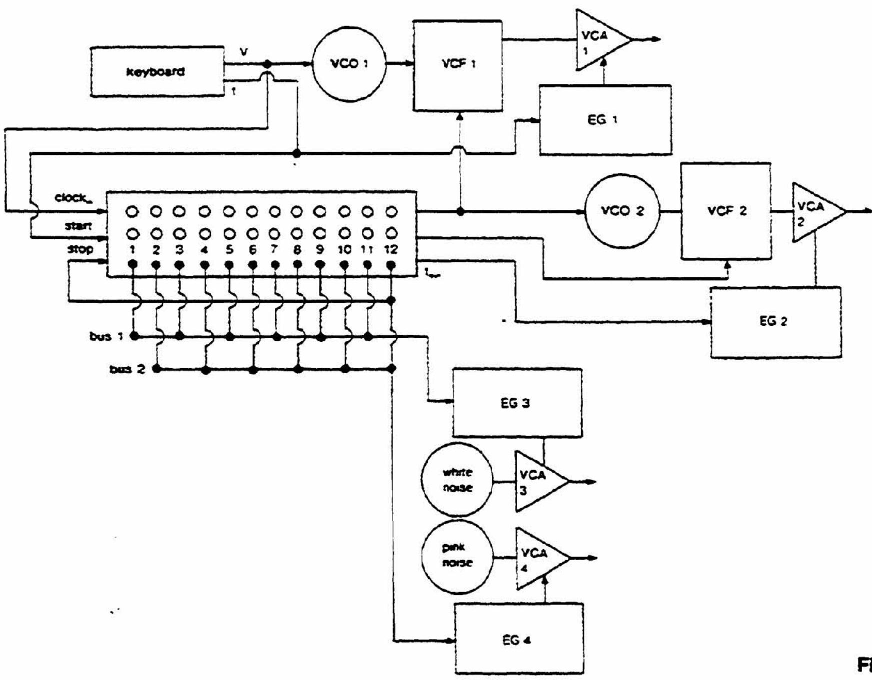

Figure 6.62. Complex sequencer-based instrument

A. Clock control
   1. Available speed or period
   2. Voltage control possibilities
   3. Dedicated or external clocks
   4. Stop/Start/Hold/Enable options
   5. Associated functions
      a. Variable gate time (manual or voltage controlled)
      b. Associated function outputs (reference or delta for simultaneous envelope functions)

B. Storage
   1. Number of increments
   2. Number of banks
   3. Series/Parallel outputs

C. Internal storage processing
   1. Quantization
   2. Integration
   3. Input ports

D. Pulse output routing
   1. Individual outputs
   2. Non-switchable bus
   3. Switchable bus
   4. Multiple switchable buses

E. Access
   1. Sequential only
   2. Increment skip
   3. Sub-increments
      a. Analog address
      b. Pulse address
   4. Random access

The following instrument (figure 6.62) is based on a general hypothetical sequencer with the minimum features of two twelve-increment banks in parallel, individual timing pulse outputs for each increment, a voltage controlled pulser or clock with stop, start, and

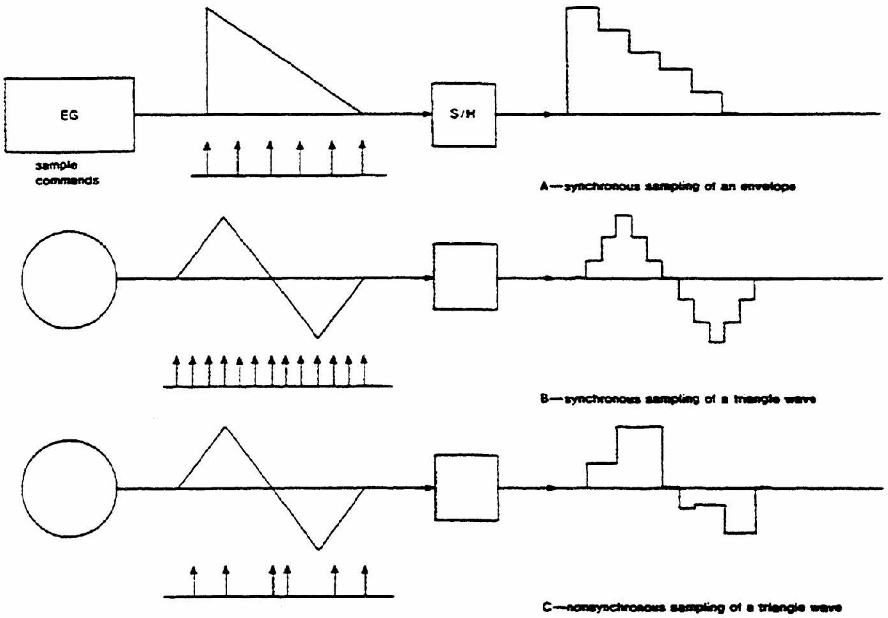

Figure 6.63. Sample/hold

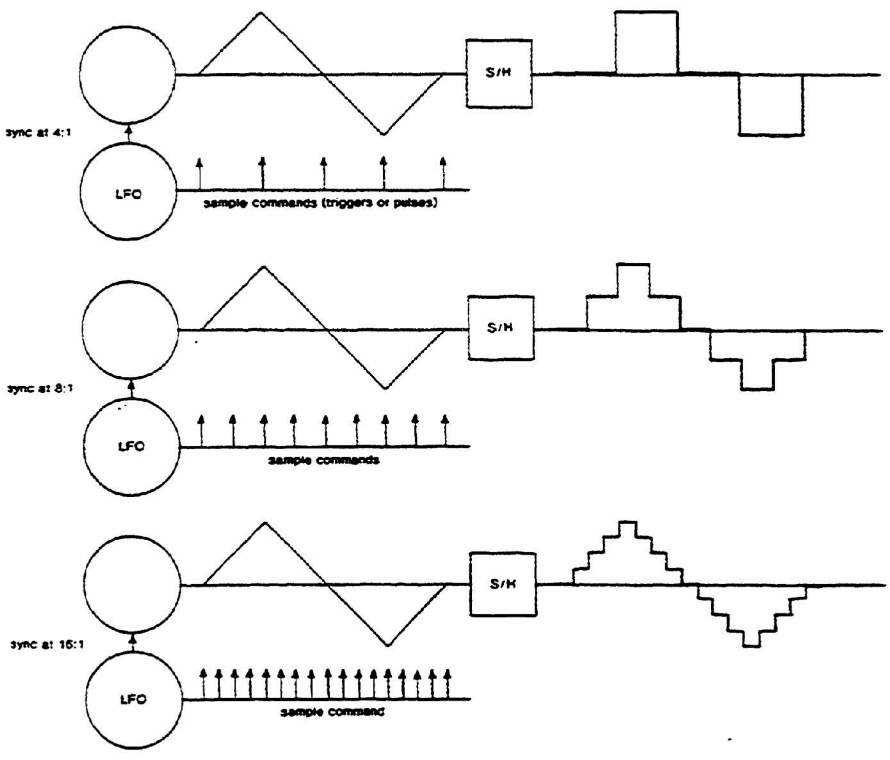

Figure 6.64. Sync sampling

gate length controls. First analyze the patch and try to imagine what sort of structuring will be generated. After it all makes sense, try to design both hypothetical instruments and instruments fitted to your own resources.

Sample/Hold. A *Sample/Hold* (S/H) is a single event memory. It has the capability of remembering a control voltage level but must not be confused with a sequencer, as it can only remember one voltage at a time. The S/H has two inputs: a *voltage* input and a *sample command* input which will be some sort of timing pulse. By means of the voltage input, the S/H can "look" at a continually changing voltage such as the output of an audio oscillator or LFO, noise, an envelope, keyboards, sequencers, etc. Upon receiving a sample command, the circuit will remember the level of that voltage at the precise moment it received the command and hold that voltage at its output until a new sample command is received.

Figure 6.63 illustrates sampling commands and the sampled outputs, using a variety of different input voltages. Note that in figures 6.63 A and B there is a repetitve "staircase" pattern produced. This will be the case whenever the period of the sampled voltage is the same as, or "harmonic" with, the period of the sample command. In this sense the term "harmonic" means that there is an integral or synchronous relationship between the two functions, the sampling command usually being the faster of the two. The voltage output pattern will repeat at the same point that the sample command and input voltage are back in phase with one another. This is not really difficult to tune if you have some way of monitoring the input voltage and the sampling rate. Some instruments have LED's on both functions which are very useful for this purpose. Another method for achieving synchrony is to phase lock or sync the sampled function and the sample command. This is readily accomplished on some instruments by using two synched LFO's (refer back to page 12, chapter 3). One LFO will generate the sample command and the other will be the sampled voltage. Figure 6.64 illustrates different integral voltage/sample relationships. With some S/H formats the sampling clock and generator for the sampled voltage (usually a multi-waveshape LFO) are packaged together as a single module. It is common in this case to have integral relationships built in so that synchrony is automatic. This is convenient for generating staircase functions but usually eliminates the possibility of non-synchronous patterns. A few minutes of experimentation will make all of these voltage patterns obvious.

Figure 6.65 is a series of related patches which use the S/H as a dynamic memory to store information and articulate a definite structural or compositional

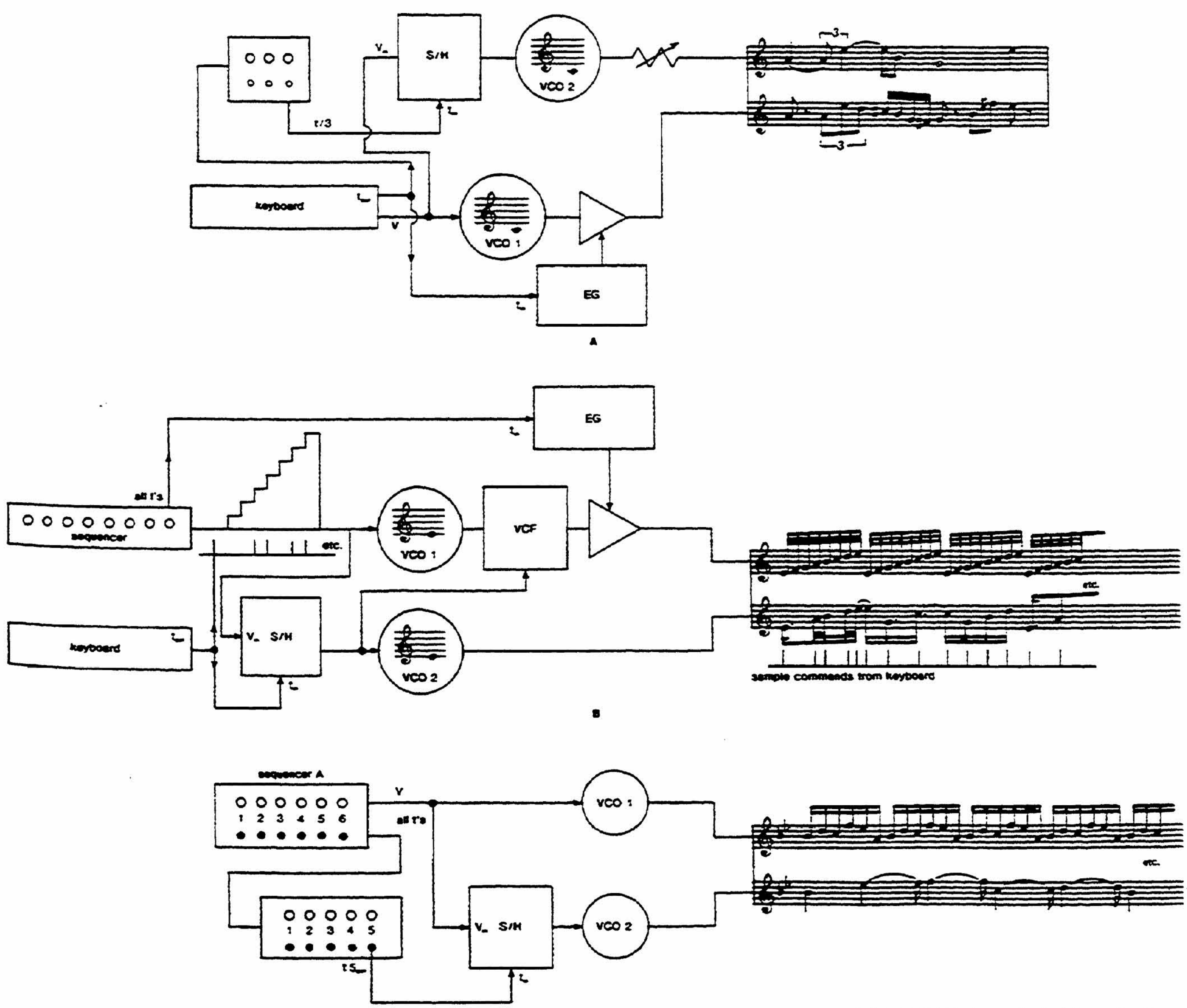

Figure 6.65. Sample/hold applications

technique. Figure 6.65A uses S/H to memorize every third keyboard voltage, independent of rhythm. The keyboard timing pulse is taken to any device that can be divided by three; this may be a three-input sequential switch, a sequencer using only every third pulse output, etc. The keyboard directly controls a VCO and by pulse division the S/H outputs only every third keyboard voltage. VCO 1 is routed through a VCA for articulation and VCO 2 is at a constant level, therefore every third pitch is sustained under the other pitch activity. If this patch is possible with your resources, try offsetting the oscillators at different intervals.

Figure 6.65B can be described as an ongoing pitch sequence with one voice (VCO 1), the S/H being used as a manually activated "window" to catch any of the pitch voltages for voice 2 (VCO 2). The sampled voltage is also used to control a LPF for voice 1. Thus there is a one-to-one relationship between the timbre of voice 1 and the held pitch of voice 2. This is really just an extension of figure 6.65A, as the sample command is given manually by a keyboard gate instead of automated by a pulse divider.

A further development of this same kind of logic is illustrated in figure 6.65C. Here the S/H is used to create a retrograde canon in augmentation. This is probably beyond the resources of many readers; but an analysis of the patch is interesting. This instrument is an example of how overall compositional structure can be totally defined by the module configuration, and the performer can insert and define the sonic details. Here two sequencers, A and B, are used in two different ways. Sequencer A generates a cycling pitch pattern and sequencer B is used as a nonsynchronous pulse divider. The pulse output of sequencer A triggers sequencer B, but the important relationship is that sequencer B has *one stage less* than A. In this case A is set for six stages and B is set for five stages. Looking at the resulting pitches, it is observed that sequencer B receives its pulse from sequencer A but will then send a pulse to the command input of the S/H only on its fifth increment. Assuming that both VCO's are offset and tuned to track in unison, on the first event both VCO's sound B♭. VCO 1 continues with the sequence and VCO 2 sustains the B♭ as it has not yet received a sample command to change. On the fifth increment of sequencer A, sequencer B sends a sample command to the S/H, which then picks up the fifth increment of sequencer B, an E♭ pitch voltage. Sequencer A continues to cycle while sequencer B sustains the E♭. Since sequencer B will send a sample command every fifth pulse, the next change for the S/H is simultaneous with the B♭, which it holds until the next fifth pulse. In this way the S/H is allowing VCO 2 to move backward through the pitch sequence and one-fifth the rate,—complicated but a lot of fun if you can make it work. Don't forget the possibility of inverting the S/H output for inversions or adding glissandi with an integrator.

Many S/H circuits have integrators built in before the output. These are usually described as *slew* or *lag* but merely adds a portamento function to the output voltages as the portamento on a keyboard does.

If the musician approaches this S/H as a "window" for ongoing voltage patterns, very complex compositional logic can be articulated with a relatively small number of modules. The Buchla 266 Source of Uncertainty (see figure 6.66) contains a simultaneous polyphonic sample and hold. When a trigger is received, the voltage appearing at the output is also stored in alternate output #1. When a new trigger is received, the new voltage appears at alternate output #2 while the first voltage remains at output #1. Processing a ramp function into an arpeggio could produce three different patterns, the "all" output generating the ongoing arpeggio and the alternating outputs giving alternating *and* sustaining pitches of the arpeggio. This is not the same as switching a voltage source between two VCO's as the pitches of one voice are sustained while the other voice changes. The Buchla 266 has alternate pulse outputs, and therefore each voice can be independently enveloped as shown in the patch. This polyphonic capability can be replicated with two S/H's and alternating sample commands.

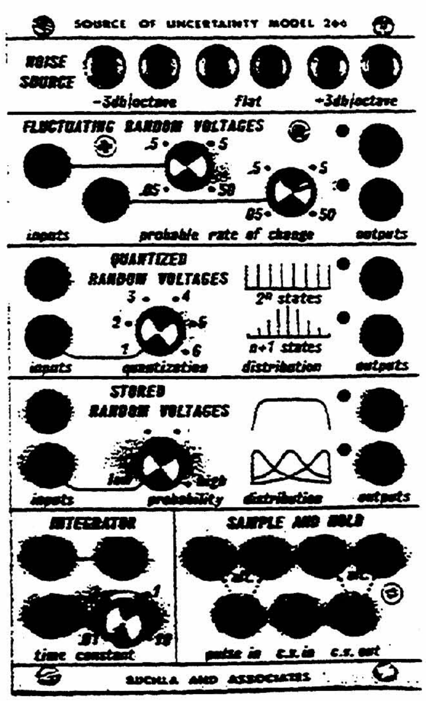

Figure 6.66. Buchla Series 266 source of uncertainty

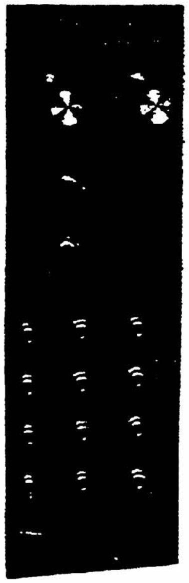

Figure 6.67. Aries AR-318 Sample/Hold (Photograph Courtesy of Aries Music Inc. Used by permission.)

age is processed through a T/H. The voltage of the triangle function will appear unaltered at the output until a gate is present, perhaps from a keyboard. As soon as the T/H receives the gate, the output voltage will hold at the level present on the input at that time. The result is that the "tempo" of the clock will also hold at a proportional speed. As soon as the gate is released, the fluctuating input voltage will be outputted and the clock speed will immediately switch to the proportional speed and continue to follow the voltage function. This patch allows the player to grab and hold a fluctuating tempo. The clock can be used to trigger sequences, envelope generators, switches, etc. The T/H gives the player the ability to "freeze" an ongoing voltage at any point in its evolution, apply that voltage to any parameter, then to return to the ongoing voltage at will. This process can be applied to any transient voltage—sequencers, envelope generators, etc.

Track-and-Hold. The *Track-and-Hold* (T/H) is a variation often accompanying the Sample-Hold and will usually be built into the same module, such as the Eu 2410 or the Aries AR-318 Sample and Hold (see figure 6.67). A track-and-hold operation relies on a gate input. When a gate voltage is present, it will exactly follow or duplicate the incoming voltage and as soon as the gate is released the output will hold at the last voltage level tracked. Consider the patch in figure 6.68. A triangle LFO or repetitive envelope is determining the period of a pulse source. Normally the period of the clock would vary with the rise and fall of the programming voltage. In this case the voltage is processed through a T/H. The voltage of the triangle function will appear unaltered at the output until a gate is present, perhaps from a keyboard.

Random Voltage Sources. The most common application of the S/H is in the generation of random voltages. Most S/H circuits can sample an AC or DC voltage, independent of its frequency range. White or pink noise, when viewed on an oscilloscope, can be seen as rapid and random fluctuations in amplitude or voltage level. The S/H can grab one of these random voltages at any time so that the output is a stepped random voltage. The unattenuated output ideally is a random selection of control voltages throughout the control voltage range of the instrument (see figure 6.69). I say "ideally" because there is a probability factor involved with this method. As

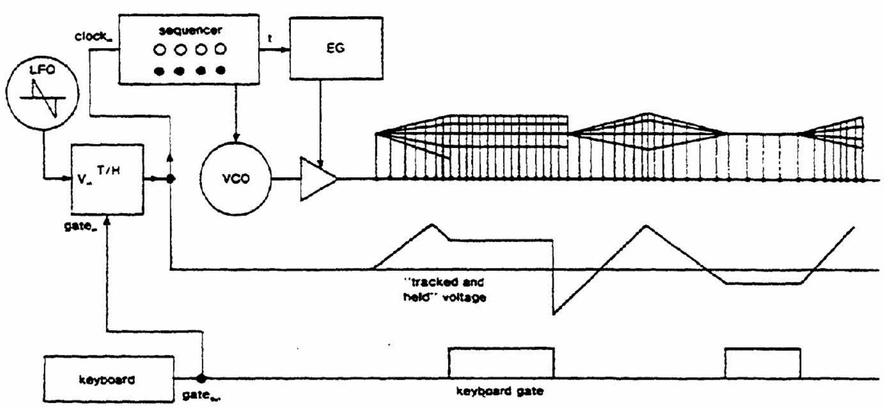

Figure 6.68. Track/hold application

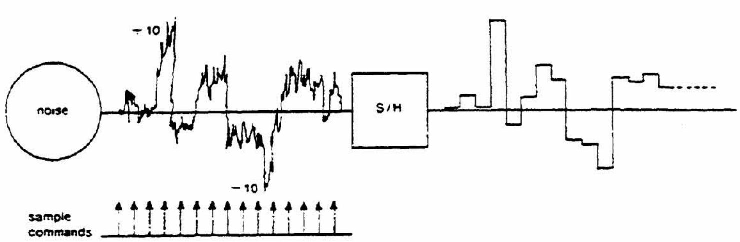

Figure 6.69. Sampling noise to produce random voltages

pointed out in Bernie Hutchins's *Theory and Application of Noise Generators in Electronic Music*,[8] a long term record of the voltages produced will show that there is a tendency for the voltages to gather around the middle of the voltage range. If the control range is −5 to +5 volts, a good portion of the "random" voltages will be near 0 volts. If the control voltage range is 0 to +10 volts, many of the voltages will be around +5 volts. This is due to what is known as the Gaussian distribution, which is a normal characteristic of white noise. If this type of sampling is applied to a VCO, there will be more pitches near the middle of the total available pitch range, and very high and low pitches will be less frequent. If this confuses you, there is another method which might be applicable and this is illustrated in figure 6.70. A sawtooth oscillator is modulated by pink or white noise (see chapter 8). This means that the frequency of the sawtooth wave is undergoing random changes at an audio rate. This sawtooth wave is then used as the sample voltage. What is being sampled is the descending (or ascending) edge of a voltage function which is changing randomly in time. With this method one has the same chance of sampling a high, medium, or low magnitude voltage. The amount of effect a random voltage has on a parameter is not the same as distribution probability. With no attenuation a random voltage source hypothetically will drive a parameter throughout its entire operational range. Attenuation of that voltage only restricts the range but does not change the distribution of events within that range. This technique of sampling noise to produce random voltage can be reversed to produce often surprising results. Use a stepped or triggered RVS clocked at a very fast rate, well into the audio range, to control a VCO. The VCO is then randomly changing frequency so fast that the VCO itself sounds like some undefinable noise source. The texture of the sound can be controlled by either the frequency of the timing pulses or the attenuation of the RVS.

Most dedicated random voltage sources (RVS) are based on the previously described techniques. Buchla instruments have done the most extensive developments in random voltage functions. The Buchla 266 Source of Uncertainty pictured on page 82 (figure 6.66) makes it possible to define these random voltages in a variety of ways. The upper section of the module provides three "flavors" of noise: white (+3 db/octave), pink (musically flat), and reciprocal white noise (−3 db/octave) which sounds like lowpass filtered pink noise but really involves a redistribution of energy rather than band limiting.

The second section produces two fluctuating random voltage sources. This is analogous to "low" noise

8. Published in *ElectroNotes*, #64, vol. 8, April 1976, p. 3.

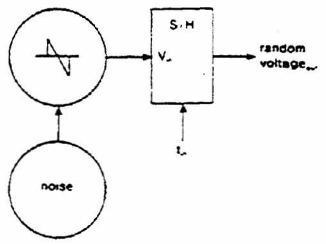

Figure 6.70. Alternate technique for generation of random voltage

on most other random voltage sources. The probable speed of fluctuation can be defined anywhere between .05 and 50 times per second. The direction and maximum magnitude of the change cannot be predicted but the rate can be controlled. This function is voltage controllable so that various random rates can be pre-programmed by a sequencer, played by a keyboard or a brainwave, or even determined by another random voltage.

The "quantized random voltage" output is the most interesting, and a minimal amount of math is involved. There are two outputs that generate a voltage whenever a pulse is received. One output is marked "n + 1" and the other is marked "2^n". "n" is a numerical value from 1 to 6 and may be defined by a front panel offset or determined by an external control voltage. If $n = 1$, then the $n + 1$ output gives two random voltages, chosen in random order at the rate of the input pulse. The 2^n output also generates the same two random voltages ($2 \times 1 = 2$) but in a different random order. As n is set to 2, the $n + 1$ output is 3 voltages and the 2^n output is 4; when $n = 3$, the $n + 1$ output is 4 random voltages and the 2^n output gives 8 random voltages, and so on. Thus it may be that this means linear or geometric access to the number of random voltages. As n increases, $n + 1$ increases linearly and 2^n increases geometrically. This leads to some interesting correlations, as illustrated in figure 6.71. In this instrument the $n + 1$ output is patched to a VCO and to the "n" input of the RVS. The 2^n output is patched to control a filter and to the period input of the pulser. Before reading further, make your own analysis and prediction about how this random instrument will behave! A high magnitude random voltage will generate a high pitch (depending on the attenuation setting on the VCO) and simultaneously set the value of n higher so that the next pitch can be randomly selected from a greater range of possibilities. If the voltage is low, the pitch will be correspondingly low and set the value of "n" so that the next pitch will have more restricted range of possibilities. Simultaneously the 2^n output controls the filter. Thus as the range of pitch selection increases, the number of possible spectral ranges becomes greater, but in a geometric relation. The speed of the pulser providing the triggering information is also controlled by the 2^n output so that bright

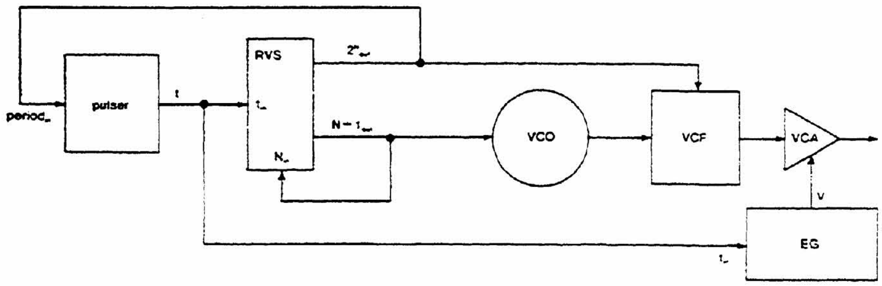

Figure 6.71. Correlation of random voltages in an instrument

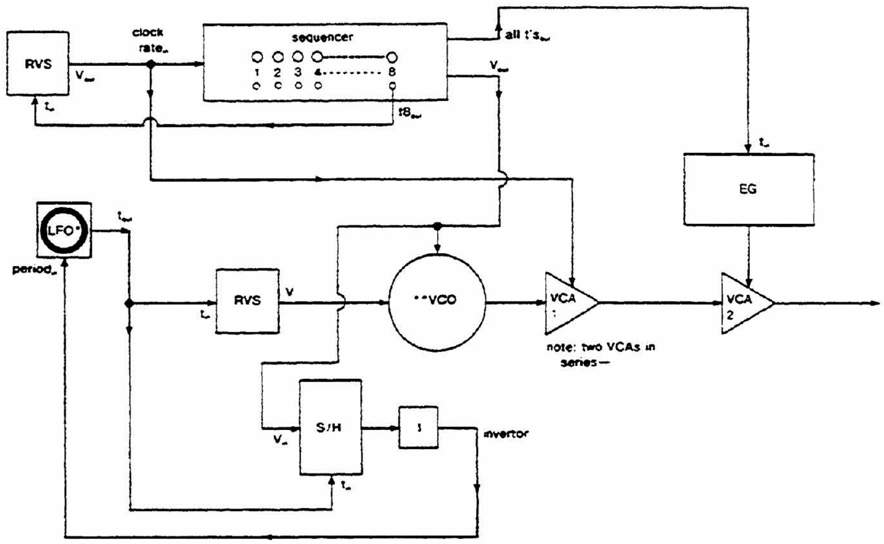

*Any controllable pulse source.
**The sequencer and random voltage source are equally mixed to control the pitch of the VCO.

Figure 6.72. "Dream machine"

timbre is accompanied by longer events, longer events are accompanied by greater range probabilities for pitch, and the number of range probabilities for pitch selection is correlated geometrically with the number of possible spectral choices! This tail-chasing configuration can really consume many hours in the studio. However, it is worth exploration, therefore just keep it under control according to your compositional and performance interests.

The fourth section of the Buchla 266 also has two outputs: one marked and the other marked . Both outputs generate stepped random voltages when an input trigger is received. But each output has a different voltage distribution probability. The top output generates random voltages according to even voltage distribution. The bottom output has a pot and control voltage input for establishing random voltage distribution probabilities. With the distribution pot to the "low" setting, most of the random voltages will be low magnitude, with occasional medium and even less frequent high magnitude voltages. This is not the same as attenuating, because the total magnitude is not compressed but rather involves a redistribution of energy. As the distribution pot is turned to the right, or as a control voltage is applied, the distribution moves through medium to high magnitude random voltage distribution. Voltage control of this distribution also allows one to program or play in real-time the center areas of random activity. The two lower sections of the Buchla 266 are a voltage controlled integrator with the time constant defined by an offset, or a control voltage and a polyphonic sample-hold as described on page 82).

Figure 6.72 is a "dream machine" in which the musical structure is defined on a moderately high level but two RVS's are used to affect the behavior of the fixed structure. Like Douglas Leedy's *Entropical Paradise* (see page 224), once this instrument is turned on, it will totally control its own performance. Analyze this instrument and see how much of this "random" instrument is actually predictable.

Patch Analysis. At this point the reader is dealing with fairly complex instrument configurations and it is very easy to be lost in the maze of connections and correlations. I would suggest following a set analytical procedure. You may already have developed a favorite method of taking patches apart, or an instructor may have some valuable hints. The following method is one that I have used with success with my own students and I would recommend that you try it.

The Rapout* Approach to Electronic Instrument Configurations

*Reasonable Analytical Procedure for Observing Usable Techniques

1. Locate and trace all audio signal routing and their offsets.
   a. How many sound sources are used (VCO's, noise sources, external sources via mikes, tape recorders, etc.)?
   b. Are these signals detected via ED's or PVC's to generate controls, or are they used as real voices within the instrument?
   c. Locate and trace all signal routing from their source to the final output via sub-mixes and final mixes.
2. Identify all variable audio parameters.
   a. In what ways are the audio signals processed (filters, amps, reverb, etc.)?
   b. Are these processing modules variable manually as specified by the composer, or are they voltage controlled by means of an active input? Note the control voltage attenuation level and predict how much effect a voltage (positive or negative) will have on the parameter—how much will the pitch of a VCO change with an applied voltage, what will be the maximum gain of a VCA, how much spectral change will be caused by the control of a filter, etc. At this point you will be aware of the number of voices involved and the number and degree of possible change in those parameters which can contribute to the basic sonic nature of the sounds.
3. Locate all control voltage sources, routing, and processing:
   a. to audio sources and any external processing onvolved—what controls the VCO's, and is the control inverted, integrated, sampled, quantized, etc., before it reaches the VCO? Do the same for each sound source or audio processing module (mixers, VCA's, etc.).
   b. to function generators. If a function generator has a manually variable or voltage controllable sub-function, what is doing the controlling, what is its range of effect in relation to the established offset, etc.?
4. Locate all timing pulse sources, their period and any processing.
   a. are the pulses manually activated or automated?
   b. if automatically generated, what is their period or speed and is this function voltage controlled? If voltage controlled, what is doing the controlling and what is the expected range of variation in relation to the offset period?
   c. is there any timing pulse processing involved—electronic switches, gate inversion, etc.?
5. Identify all structural correlations—audio and control.
   a. Within a single voice, is pitch related to loudness by means of common control sources? Are filter sweeps related to VCA control, etc.?
   b. Are separate voices related by common controls? Does the loudness of one voice have anything in common with the pitch of another voice?
   c. What are the relationships between control voltage sources? Is the speed of an LFO or the period of a pulser related to the selection or control of another function?
   d. What are the relationships between the behavior of any audio sources and processing and a voltage controlled function? Is the gain of a VCA related to the decay time on an EG?
6. Now try to describe verbally what the instrument will do.

This is a lengthy process but some configurations can become very complicated.

Miscellaneous Controllers. Another method of producing constant or varying control voltages is with "photosensitive controls." In electronic circuitry there are many components that are used to limit or block voltage. Their rating (how much voltage or current they are capable of blocking) may be permanently fixed or may be manually controlled as with a potentiometer. Photosensitive devices will vary their rating in relationship to an applied light source. In simpler terms, a photosensitive controller is a light-controlled pot. A "photosensitive oscillator" will usually generate zero Hz when no light is applied to its light controlled resistor (pot). The photo-oscillator will generate a maximum frequency when a maximum amount of light is applied. A photo-amplifier will provide signal amplification in direct relationship to the amount of light applied to its photo-controller. (Photosensitive controls are very applicable to spatial modulating devices and will be discussed in detail in chapter 13.)

Direct voltage can be controlled with light by using "photodiodes." An absence of light striking the photodiode may result in zero volts DC, while an increase in the amount of light (usually measured in lumins) will produce a proportional increase in DC voltage. The amount of light can be controlled in two different ways. A change in voltage to the light source will change the intensity, but this method is usually inadequate because the control of voltage is the desired outcome. The most useful methods of controlling light intensity is with the use of film. By placing film with varying levels of translucency between the light source and the photocell, it is possible to produce many voltage levels. By making lengths of film with various translucent patterns and driving it in front of the photocell with a motorized transport system, it is possible to create practically any type of fluctuating DC (or AC) voltage pattern. If a film consisted of a series of transparent frames in alternation with opaque frames, the produced voltage would be a pattern of voltage pulses. The pulse speed could be varied by altering the speed of the transport system, and the pulse magnitude would be a function of the translucency of the frames. Any voltage envelope could be produced in the same manner.

Punched tape control also uses a transport system. A strip of paper containing a series of perforations is passed over a switch by a transport system. The perforations are detected in one of several ways which either triggers a voltage on or off, usually by means of light-sensitive switches or relays. These voltages are usually preset and can be used to control any voltage-sensitive device. The "reader" usually has eight or twelve lateral switches which will accommodate a lateral series of perforations in the paper. Each series of punches can be used to control a differnt parameter.

The Coordinome, developed by Emmanuel Ghent at the Columbia-Princeton Electronic Music Center, is essentially a punched tape reader which can be programmed to control all of the parameters of sound as well as distributing cue signals to the performers for the coordination of live and prerecorded music. (See Emmanuel Ghent, "The Coordinome in Relation to Electronic Music," *Electronic Music Review*, no. 1, January 1967, pp. 33-38, for a detailed discussion of punched paper programming.)

The advantages of film and punched paper programming are that the program is a physical entity which can be saved to be used at any future time; punched paper can control as many simultaneous sequences as there are switches on the reader; an entire composition may be programmed on film or paper and played in much the same manner as player pianos play rolls of music. The major disadvantage is the preparation of the film on paper. Using control pots, the composer can allow for a certain amount of experimentation in his compositional process and his only loss is the time it takes to turn a dial and listen to the results. With film and paper programming, however, there is a great deal of time involved in the actual physical preparation of the sequences; and if the composer wishes to recompose some particular event, this involves a complete physical reprogramming of that portion of the film or tape. This method of programming is practically superseded by current digital techniques but it is still in operation in several studios.

This chapter has presented an overview of typical control voltage sources, methods of processing, with both common and uncommon applications. Every manufacturer will have a different design format, features and occasional varying terminology. At the same time, various instruments may have control voltage options not specifically cited but they will usually fall into some category of sources described here, or they may be an integrated combination of typical sources and processing options. It is essential that the musician have a firm grasp of what a specific control voltage source can do and understand how to control it in a structured musical environment.

Any audio or temporal art can never be fairly represented with words, and the only real representation of voltage control is in the actual practice of its application to a real time situation. A graphic explanation of voltage control may leave the reader with the opinion that the time spent on preparing the desired voltage is not justified by the end results. In acoustically produced music, after the conceptual problems have been solved, the final task is to make the appropriate designs on the score and parts to serve as a cue for the performer to produce the desired event. It must be remembered that the "standard notation" has been in use for centuries and some people take its comprehension for granted. But would a person first embarking on the study of controlled sound production (music performance) find the standard music notation any less time consuming to comprehend and utilize than voltage envelopes? In the same manner, the composer working in the field of electronic music very quickly learns to use voltage programming in the same way that standard notation is used as a form of visual programming. And as the composer becomes more and more familiar with the music and acoustical counterpart of electronic manipulations, the production of the desired control voltage is no more a task than the copying of a score and parts.

By now the reader should try to practice away from the instrument. Once the nature of the sound(s) and basic performance logic is determined, patches can be designed in any quiet corner. The patches can then be taken back to the instrument for verification and refinement. And, as with any kind of practiced skill, the more one does it the more efficient he becomes. The following projects and exercises are related to the general techniques and instruments described in this chapter and are usually intended to making the user aware of the workings and limits of whatever instrumentation is available. As you work through a project, take notes about the kinds of responses you get, the kinds of sounds produced, and add any newly invented configurations to your patchbook.

Exercises and Projects

These suggestions summarize some of the basic points of control concepts and should not be attempted until the entire chapter has been read. Each of these projects may be approached on three levels: (1) If you don't have the available resources to carry out the suggestions, at least read through all of them and give them some thought; you may be able to come up with a way. (2) If you have the required resources, go through each project as it is laid out. (3) If you have access to a thoroughly equipped studio, most projects can readily be expanded into larger and more complex research projects.

1. Take any acoustical instrument you are familiar with and analyze its input gestures, structure, and output—what actions control pitch, loudness, timbre, etc., and how are they all interrelated to produce a characteristic sound? Try to defeat its structure by experimenting with new inputs (e.g., press the sustain pedal on a piano and sing or play into it, put a speaker under the soundboard and play electronic sounds into it, bow a guitar, put a reed on a trumpet, etc.).
2. If it were possible to re-define the input of an acoustic instrument in terms of function generators, what functions would be of interest to you? Design and draw up your concepts—it might be possible!
3. Conceptually invent a completely new instrument. Don't be concerned with any technical problems—assume an engineer can take care of that. Decide what convenient physical, mental, or environmental actions would control each parameter and how they would correlate each other.
4. Any module providing a choice of linear or exponential function generation or control should be experimented with. A suggested approach is to apply a level-varying voltage from a keyboard or EG to a control voltage input and do an A/B comparison by switching back and forth between linear and exponential modes.
5. This text assumes a control voltage range of from −10 to +10 volts. Check out your operation or studio manual to see whether or not this is the case with your resources. If the instruments are 0 to +5, 10, 12 volts, there is no problem, as they can be normalized to ±10 by reading the text voltages in terms of percent. +5 is 50% of the total range, +7 is 70%, etc. If the operational range is bi-directional, a percentile transfer is still quite simple. A common bi-directional control voltage range is −5 to +5 volts. In this case a 0 volt text voltage would still be 0, a +5 text voltage would be 100% of its potential. If the operation manual does not provide this information, ask the studio technician or instructor to help you look at the control voltage on an oscilloscope.
6. Set up a bank or set of three or more VCO's to track in parallel. If you have problems, use the techniques on page 49. Set the patch up as in figure 6.73A. Set the VCO's to track at different intervallic relationships and use other function generators instead of the keyboard. Now independently process each control voltage leg as in figure 6.73B. Predict the response before you set things in motion.

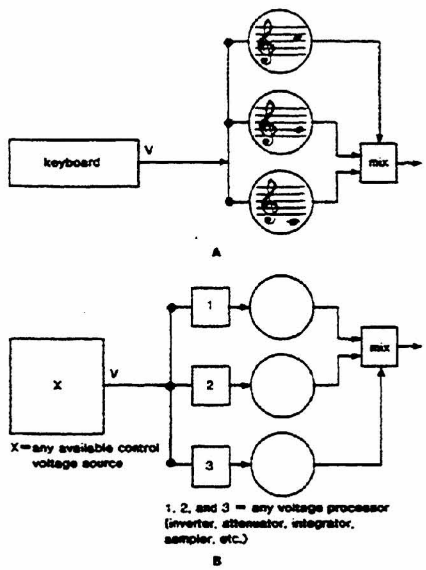

Figure 6.73. Parallel processing exercise

7. If you have access to integrators, quantizers, and multipliers (coupled VCA's), turn discrete control voltages from keyboards, sequencers, etc., into continually varying functions. A fixed voltage may also be made into a fluctuating voltage by multiplying it with a sloped voltage such as an EG, LFO, fluctuating random, etc. Now reverse the process and turn varying functions into discrete levels. Invent an instrument based on this process.
8. Figure 6.74 is an excerpt from Robert C. Ehle's *Prelude in 19 Tone Equal Temperament.* This tuning requires 19 equal divisions of the octave. The procedure for tuning an electronic instrument for this response is to patch the keyboard voltage into an attenuatable control input on a VCO. Tune the correct intervallic response by turning down the control voltage attenuator (or processing level) until a keyboard span of a perfect 12th (C_1 to G_2—20 pitches, 19 intervals) sounds like a perfect octave. There will then be 19 equally spaced intervals in a sounding octave. Mr. Ehle has then notated the *keys to be played,* as our

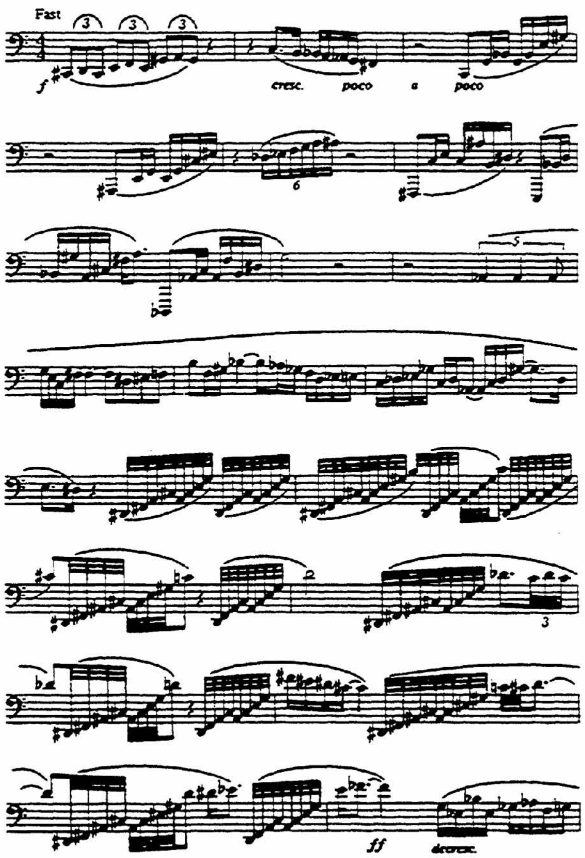

Figure 6.74. *Prelude in 19 tone Equal Temperment* **OP. 21 (excerpt) (By Robert C. Ehle. Used by permission of the composer.)**

traditional notation cannot accommodate this tuning. The A♯ to E diminished fifth in measure four will actually sound more like a flat major third. Make this tuning and play through the excerpt, listening carefully.

9. Try the Asian 7 tone equal-temperament tuning. Here seven equally spaced intervals are divided into the octave. Remember that seven intervals makes eight notes, so that the required response is a played perfect fifth (C-G) sounds an octave. On some systems a seven note span will not generate enough voltage swing to produce an octave on a VCO since this involves amplification of the control voltage on a 1 volt per octave system. If the processing input will not expand the voltage sufficiently, try the options given in figure 6.75A and B. Either mix a control voltage with itself through two control voltage inputs (one of which must be an attenuating input), or mix it with itself via an external DC mixer.

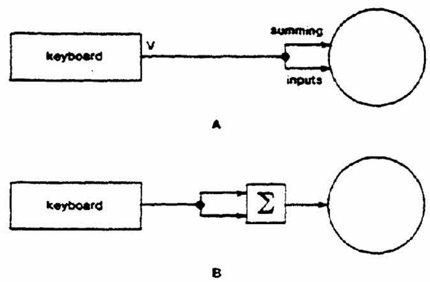

Figure 6.75.
Voltage expansion for macro-tunings

10. If you have some type of control voltage multiplier or coupled VCA, use it in conjunction with some form of pre-set (on a keyboard or a manually triggered sequence) to store some newly invented tunings. A suggestion for doing this is illustrated in figure 6.76. The equal-voltage keyboard output is patched to the input of the multiplier and the pre-set voltages are taken to the multiplier or control input. Remember that the value of the input voltage (the keyboard) will be determined by the control (the pre-sets or sequencer). If using a coupled VCA for a multiplier, offset it to zero. Now the value of the pre-set voltage will determine the amount of attenuation of the keyboard voltage. The 19 tone equal-temperament voltage will be recovered if the pre-set is a bit below 6 volts—5.833 volts to be exact. Don't be concerned about exact numbers at this point—just use them to get in the right area and then use your ear. 25 tone equal-temperament would be tuned by making a 26 interval span (C_1 to $C\sharp_3$) sound like an octave. Fokker's popular 31 tone equal-temperament would call for a 32 key span to sound as an octave. Any of these multipliers can be stored as control voltages and accessed as needed. In this way it is possible to switch tunings on command.

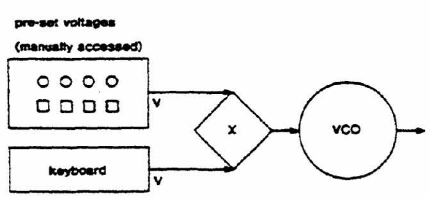

Figure 6.76.
Tuning storage

11. Take a single control voltage function and apply it to every controllable parameter in your instrument (or at least to the ones discussed so far). Try various attenuations and processing possibilities on each parameter. Repeat this exercise using only two control voltage sources, then three and so on. As you find things of interest along the way, add them to your patchbook.

12. The entire score for Daniel Goode's *Faust Crosses the Raritan Somewhere in East Africa and Finds Himself Back Home, A Little South of the Reich* is reprinted here. It is an excellent piece for initial work with a sequencer and a lot of fun to play. The use of quantizers is not allowed in a performance!

"Faust crosses the Raritan somewhere in East Africa and finds himself back home, a little south of the Reich . . ."

—performance piece for Synthesizer
Daniel Goode © 1975

Take a familiar tune, an anthem or march, for example, "Yankee Doodle." Sub-divide it into eighth-notes as shown.

Tune a 10 increment sequencer to the first ten eighth-notes. (To aid the tuning use the fixed frequency of the keyboard and a second VCO as a pitch model).

While the sequence is repeating (live) re-tune the first note (first sequencer increment) to the pitch of the eleventh note of the tune. Take your time . . . let the stages of tuning provide variations on that one note. Perhaps make use of microtonal and sliding effects with that pot while arriving at the new pitch.

In a like manner tune the second pot to the twelfth eighth-note of the tune. Then the third to the thirteenth . . . and so on to the end of the tune. (When one tunes the tenth pot, continue with the first pot and so on).

The series of changes should be put in a matrix which serves as a score for the performer:

Pot #1—	G	A	C
2—	G	B	B
3—	A	G	A
4—	B	G	G
5—	G	F♯	F♯
6—	B	F♯	D
7—	A	G	E
8—	D	G	F♯
9—	G	A	G
10—	G	B	G

The piece ends when all ten increments of the sequencer have been tuned to the last note of the tune.

Some microtonal discrepancies are part of the sound of the piece.

A suitable waveshape (timbre) should be chosen. Further elaboration of timbre by means of voltage control is possible, but it must be considered decorative to the structure of the piece.

Daniel Goode
9/8/75 N.J.

Figure 6.77. Daniel Goode's "***Faust crosses the Raritan somewhere in East Africa and finds himself back home, a little south of the Reich . . .***" **performance piece for synthesizer (Daniel Goode © 1975) (Used by permission of the composer.)**

13. Figure 6.78 is a "random access sequencer" configuration for the Buchla 100 instruments used by Frank McCarty. An analysis of the logic is as follows: Timing Pulse Generator 1 is used to produce a sequence of alternating high and low voltages. These voltages are taken into one input of a Control Voltage Processor, in this case used as a voltage multiplier. A keyboard is taken into the other CVP input. Thus the value or magnitude of the pulse voltages are determined by the magnitude of the keyboard voltage. Low keyboard voltages result in low voltage pulses, while higher keyboard voltages produce proportionally higher magnitude pulses. The period or rate of these pulses can be varied by controlling the period of TPG 1. The pulses then are used to determine the period of TPG 2 which is firing a sequencer. As the controlling pulses switch back and forth between their set magnitude and zero, they will vary the period of TPG 2. Realize that TPG 1 is not directly triggering the sequencer. It is only supplying controls which determine the period of TPG 2. If TPG 1's pulse is in its "off" state (0 volts), TPG 2 will clock very fast. As the controlling pulse turns on to its value determined by the keyboard, TPG 2 will respond with a longer period or slower speed. If TPG 2 is offset fast enough, the sequencer will appear to be randomly skipping about in the sequence, picking out patterns which are dependent on both the period of TPG 1 and the pulse magnitude as defined by the keyboard voltage. The noise between the random patterns is the result of the sequencer scanning very fast, responding to the 0 voltage control of the controlling pulse (remember that if a timing pulse source uses the term "period," a control will *increase* the period, not the speed). This noise can be eliminated by using TPG 1's unprocessed pulses to trigger a VCA, so that only the slower "random" sequences are in effect (when the con-

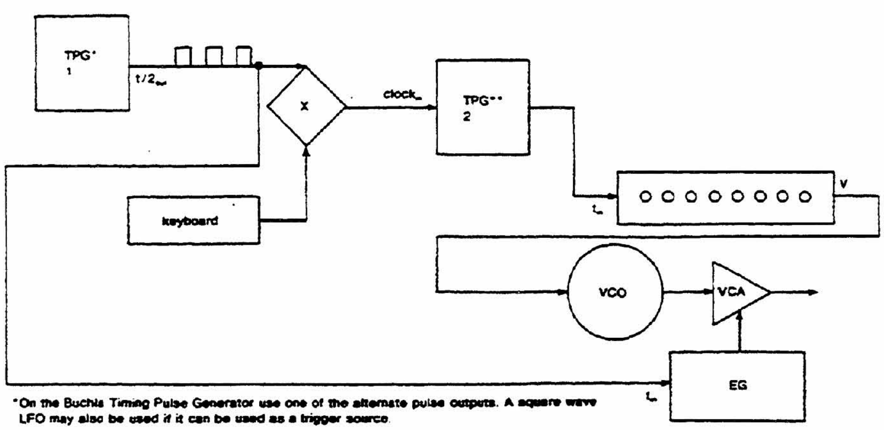

*On the Buchla Timing Pulse Generator use one of the alternate pulse outputs. A square wave LFO may also be used if it can be used as a trigger source.

**If the sequencer has an internal clock the second TPG can be eliminated.

Figure 6.78. **Random access sequencing**

trol pulse is high). This is a complex patch but can be made to work on any instrument if the processes are clear. An analysis of the patch will clarify in general terms what is taking place.

General analysis: the task is to control the scanning rate of a sequencer so that is passes over certain stages fast enough that pitch recognition is not possible but slows down to last on certain increments to form random patterns. This is done by alternately turning the sequencer's clock up and down. When the clock is slowed down, it must be slow enough that it will not generate another output pulse for a second or so. The clock is then turned up and down by applying a variable magnitude sub-audio square wave. The magnitude of this clock control must be controlled in some convenient manner. If the noise generated by the fast scanning is not wanted, the controlled VCO can be taken through a VCA which is turned on only when the sequencer slows down to grab an increment. This configuration works for every sequencer I have used; try it out!

14. The score to John Cage's *Williams Mix* (1951) tells the performer to collect on tape eight different kinds of environmental sounds, some with electronic processing. Each of these tapes is to be cut into different shapes, such as those illustrated in figure 6.79, and then spliced back onto leader tape. The shape of each cut is actually an amplitude function for that sound as it is played back. The shape of each segment is itself analogous to the shape of an envelope controlling a VCA. How could you perform an automated version of *Williams Mix* using mikes and pre-amps to collect the sounds (in real-time if possible) and eight VCA's to simulate the splices? The task is to program the envelope functions and play them to control the VCA's. The obvious answer is digital storage of the envelope functions. There are at least two other viable methods. Think about it!

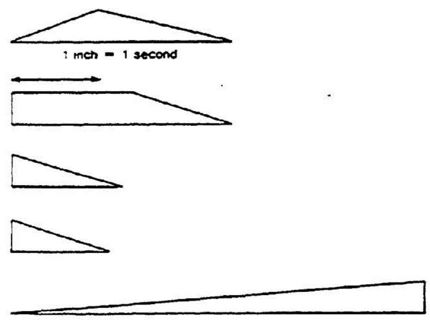

Figure 6.79. Simulation of Cage's *Williams Mix*

15. Figure 6.80 is an instrument to be used for information transfer between two compositions. Each composition, perhaps some recorded electronic music, is put on a mono tape and various kinds of information is extracted from one piece and imposed on the other. What kind of information is being transferred and what parameters are being affected? Try this yourself, using two tape recorders or a record with true stereophonic separation between the channels.
16. Robert Ashley's *String Quartet Describing the Motions of Large Real Bodies* (figure 6.81) is a matrix of *AND* gates. The pulses are generated by the string quartet using "son file" techniques described in the score. Here the *AND* gates are any voltage-controlled modules where the strength of the output signal depends on an incoming control (VCA, VCF, multipliers, various types of modulators). Both the signals and the controls are generated by the string quartet, and a player's "pulse" will only get through if it is coin-

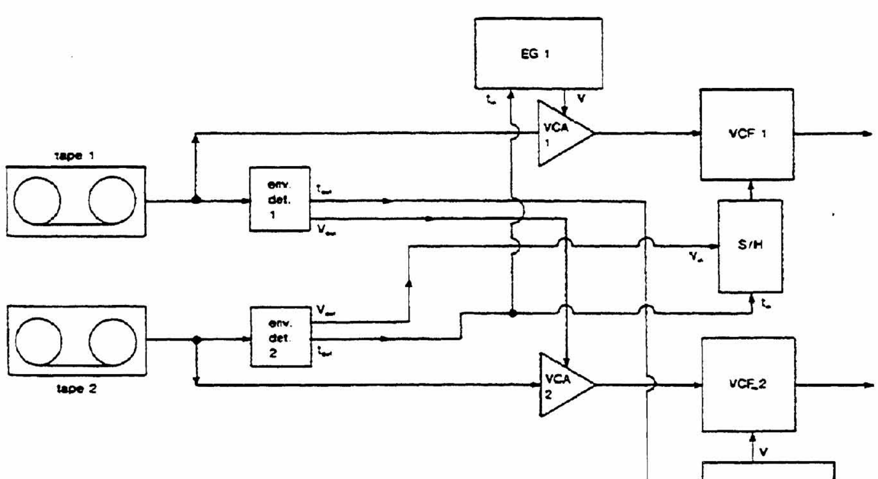

Figure 6.80. Information transfer with envelope detectors

STRING QUARTET DESCRIBING THE MOTIONS OF LARGE REAL BODIES

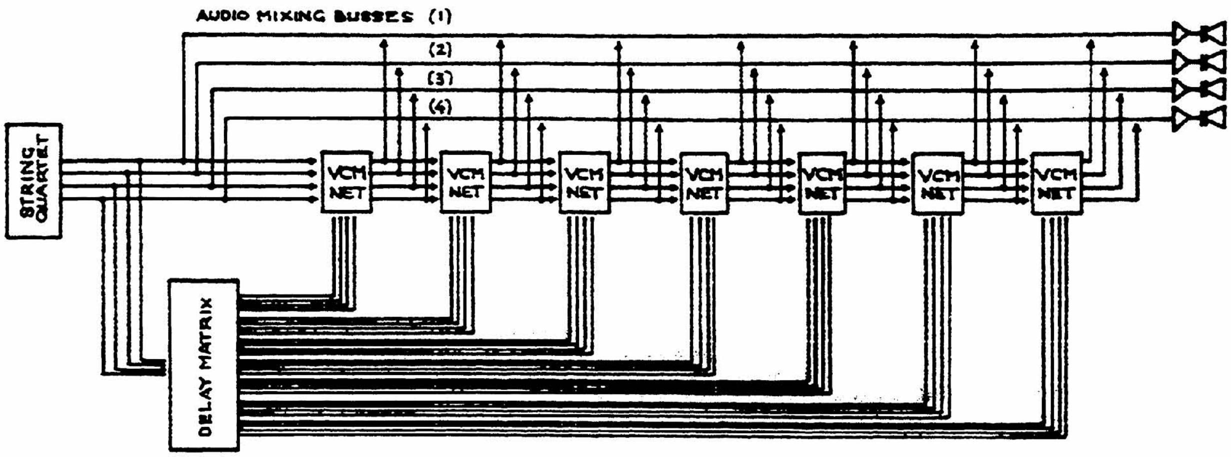

THE BOW IS DRAWN CONTINUOUSLY BUT SO SLOWLY AND WITH SUCH GREAT PREASSURE ON THE STRING THAT THE STRING RESPONDS IN RANDOMLY OCCURRING SINGLE "PULSES." IN THIS MANNER OF PLAYING THERE IS MORE SILENCE THAN SOUND. TYPICALLY, A SINGLE DIRECTION OF THE BOW MAY TAKE 10 MINUTES. INSTRUMENTS SHOULD BE TUNED UNIFORMLY LOW.

USE DIRECTIONAL MICROPHONES EXTREMELY CLOSE (WITHIN 3 INCHES) TO THE SOUND-HOLES OF THE INSTRUMENTS.

THE DELAY MATRIX SHOULD PROVIDE DIFFERENT SIGNAL-DELAY TIMES IN A RANGE BETWEEN 5 MILLISECONDS AND 250 MILLISECONDS FOR EACH OF THE SEVEN GROUPS OF OUTPUTS. DELAY TIME IS THE SAME FOR ALL OUTPUTS IN A GROUP.

WITHIN EACH VOLTAGE-CONTROLLED-MODIFIER NET ANY VC DEVICES MAY BE USED (WITHOUT REGARD TO SYMMETRY.)

USE AT LEAST ONE, OR AS MANY AS SEVEN, VCM NETS, ALTERNATING A-TYPE AND B-TYPE IN SERIES. ALWAYS OBSERVE THE SYMMETRY OF CONTROL-SIGNAL AND PROGRAM-SIGNAL ROUTINGS.

IDEALLY, THE SUM OF THE SIGNALS AT THE LOUDSPEAKERS SHOULD BE NO LOUDER THAN THE UNAMPLIFIED SOUND OF THE STRINGED INSTRUMENTS.

VOLTAGE-CONTROLLED-MODIFIER NETS

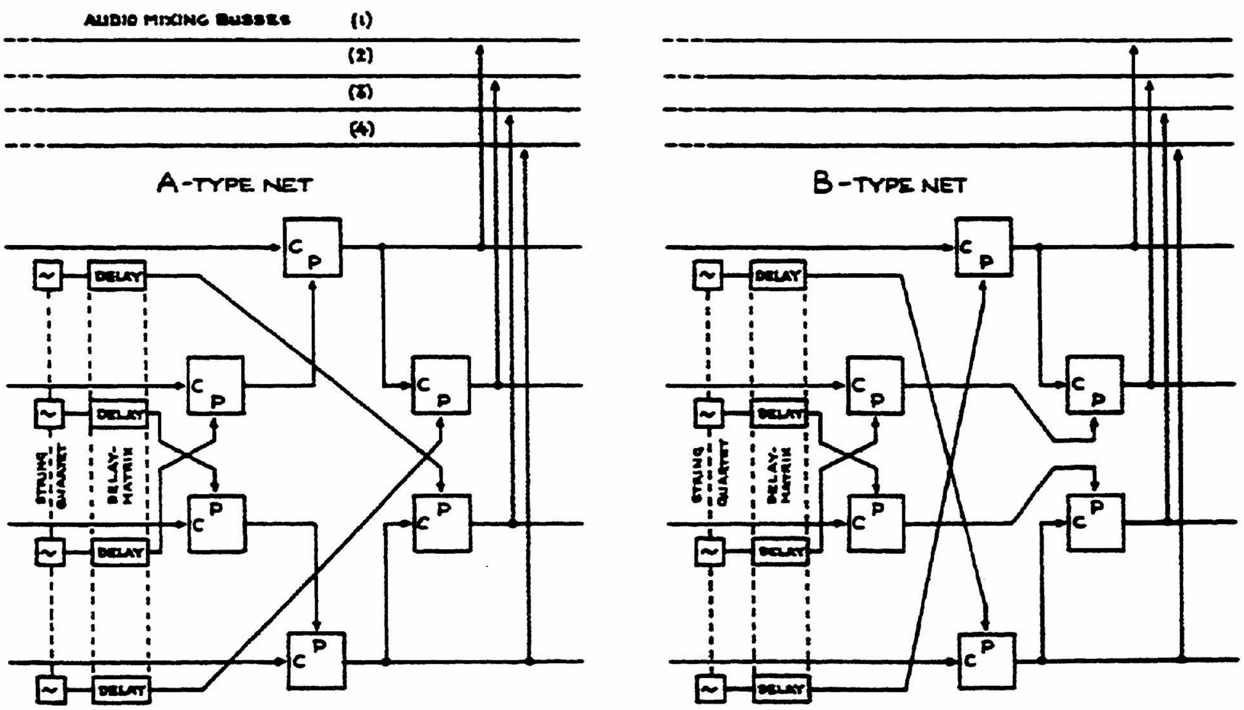

C: CONTROL SIGNAL INPUT P: PROGRAM SIGNAL INPUT

ROBERT ASHLEY 1972

Figure 6.81. Robert Ashley's *String Quartet Describing the Motions of Large Real Bodies* (Courtesy Robert Ashley. Used by permission of Visibility Music Publishers.)

cidental with another player's pulse. Analyze the patch and see how the players relate. It will help to refer to chapter 12 and look over the process of tape delay or have someone explain it to you.

17. Below is a collection of patches from commercially available patch books. These books are excellent tutors, even if they don't relate directly to your own instrument. If you are aware of the basic set-up of each instrument, this knowledge can be translated into a generalized patch chart and applied to whatever resources are available to you. Most smaller keyboard "performance" synthesizers are set up around the basic patch described on page 29. By means of slide pots or switches, the sound sources, VCO's, modulators, and noise are taken to a mixer, through one or more filters, then to a VCA. In most cases the keyboard is patched directly to the oscillators for 12 tone equal-temperament response and the keyboard timing pulses are patched directly to the envelope generators. The common envelope generators are an ADSR and often a second AR. With this assumption, any patch can be re-notated, using the guidelines suggested by the patch analysis procedure on page 86. The patch in figure 6.82 is from the ARP AXXE Patch Book and will serve as a guide to the transcription method.
    a. *Locate and notate all audio signal routing from their source through all signal processors to the output* (see figure 6.82A). The AXXE VCO has two available waveshapes, both of which are used here. If your instrument does not have this possibility, use a separate sawtooth and squarewave VCO tuned and tracking in unison. From the mixer the signal goes to a VCF, in this case a low-pass filter, and the filter is patched to a VCA. Note the offsets for each audio parameter. The square wave is not really square, since the pulse-width has been offset to about 25%. Both waveshapes are mixed with equal gain into the mixer. The VCF is offset with its cut-off frequency at minimum, and the offset for the VCA is also zero. It may be helpful to mark the audio, control voltages, and timing pulses in different colors to keep them from being confused with each other. As you become more familiar with the technique this probably won't be necessary.
    b. *Identify all variable audio parameters* (see figure 6.82B). The keyboard is pre-patched to the VCO, therefore be sure to notate that connection. In this case the keyboard transposition switch, an offset, is in the low octave. The other variable parameters are the filter cut-off and the VCA gain, both of which are controlled by the envelope generator, in this case an ADSR. For the filter control, the ADSR is attenuated about 30%, and for the VCA the ADSR is unattenuated. Notate these levels in the patch. Note the shape of the envelope: a very sharp attack with moderate initial decay falling to a lower sustain level. This will simulate the "picked" attack of a bass guitar.
    c. *Locate all timing pulses, their period and processing* (see figure 6.82C). The only function requiring a timing pulse here is the ADSR. The AXXE has triggers patched directly from the keyboard to the ADSR. The period, of course, is determined by the player depressing a key.
    d. *Identify the structural correlations.* Since the ADSR controls both the filter and the VCA, the spectrum or timbre will become richer as the sound grows louder. The keyboard provides pitch and timing logic, and when a pitch choice is made we will hear the sound.
    e. *Verbally describe the instrument.* As a key is depressed, there will be a correspondingly low pitch. The sound is relatively rich in harmonics due to the waveshapes used. As a key is pressed, the envelope generator sweeps the filter and opens the VCA. When the key is released, the sound decays to silence.

As most of these patchbooks frankly point out, each instrument, even those of the same brand and model, have variations, and the patches should be understood as 100% accurate in terms of fine tuning. Each patch takes experimentation to tune your instrument to your ear. Now try to apply this complete patch to your own instrument and when you get it to work, stash it in your patch book.

Try the following patches; even if they will not transfer to your instrument, do the analysis.

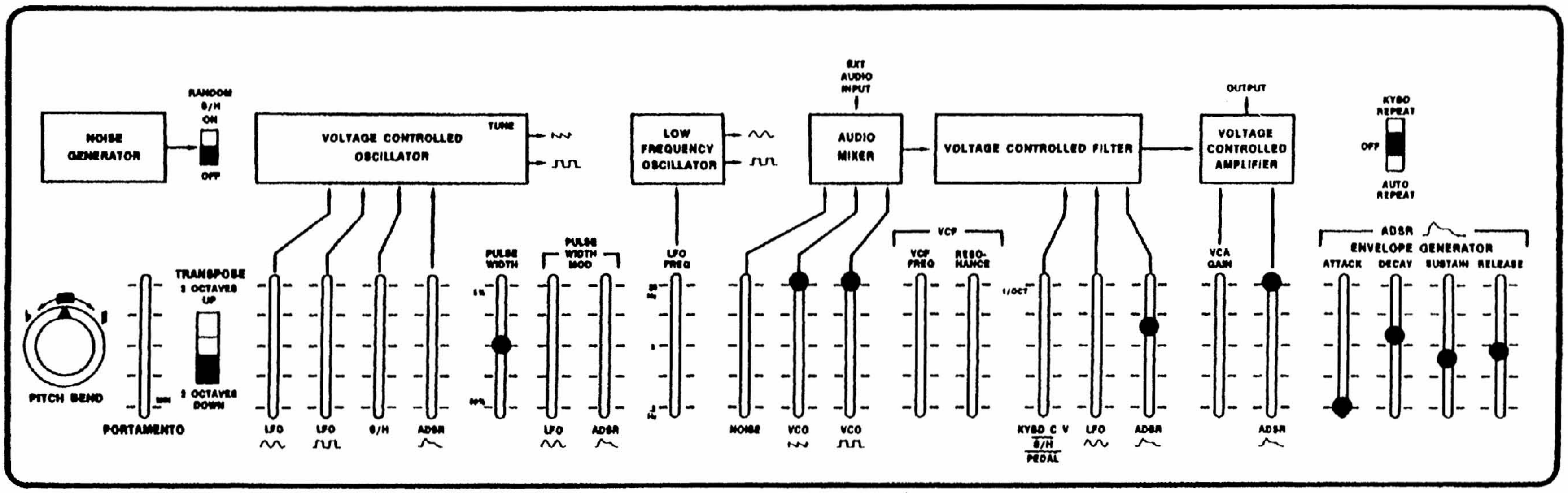

Electric Bass

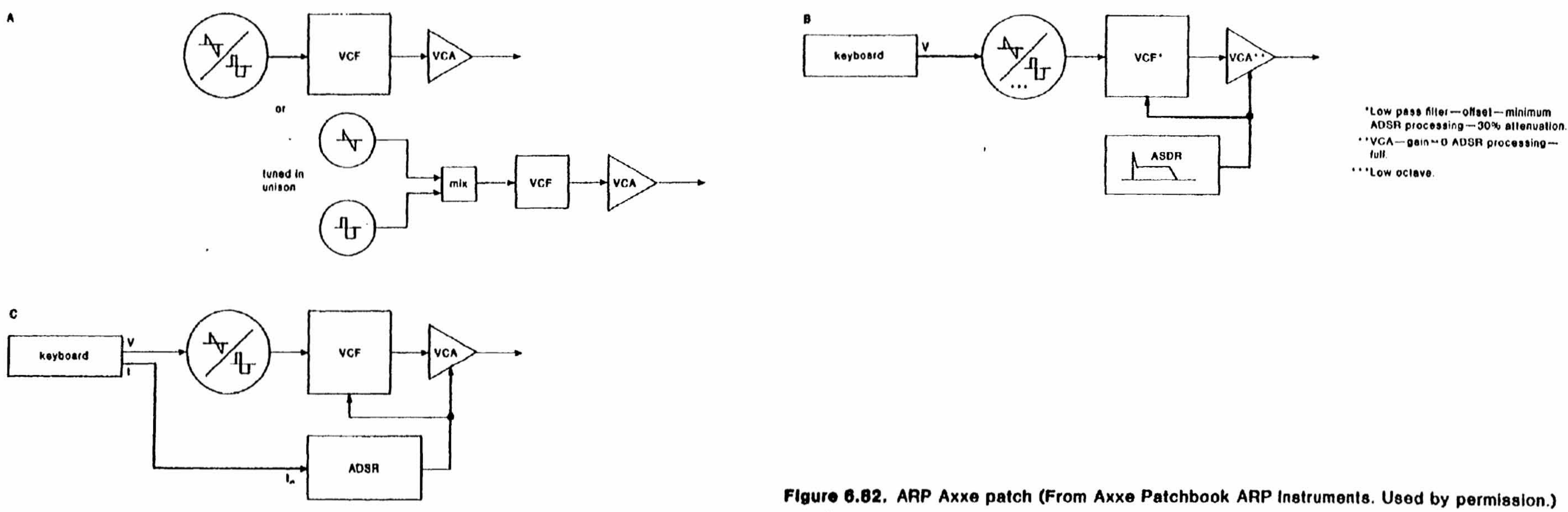

Figure 6.82. ARP Axxe patch (From Axxe Patchbook ARP Instruments. Used by permission.)

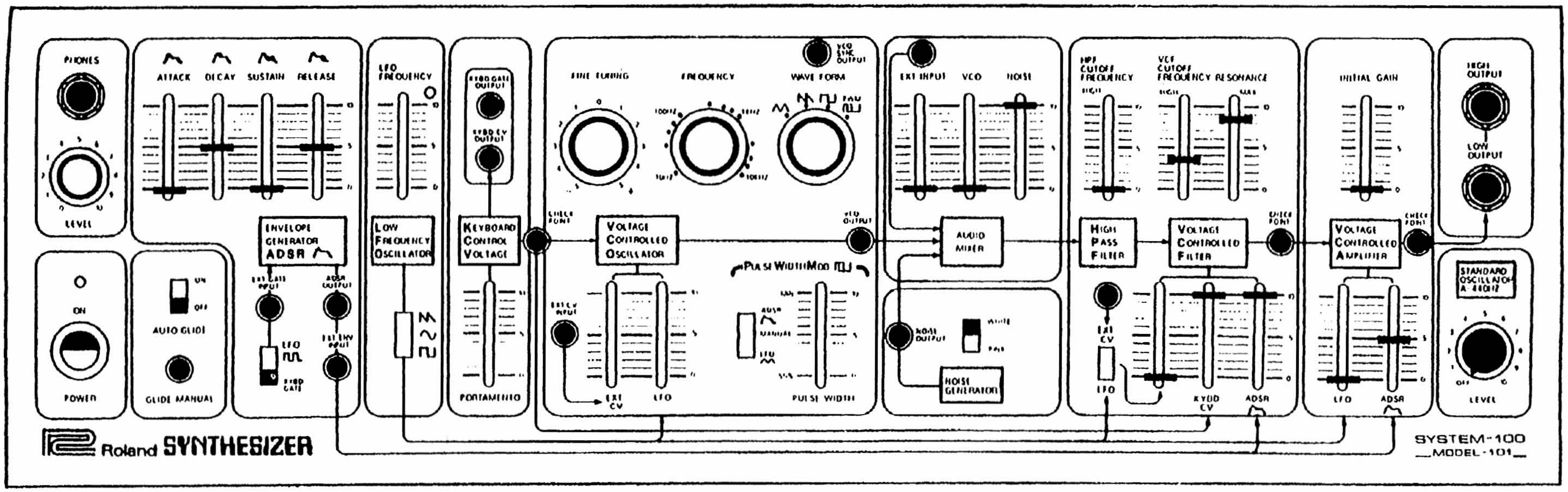

Try tapping different keys to get the effect of different guns shooting.
(叩くキーによって、異った銃声を得ることができます。)

For a machine gun effect, try this:
(LFOをゲート信号にしてマシン・ガンの感じを出すことができます。)

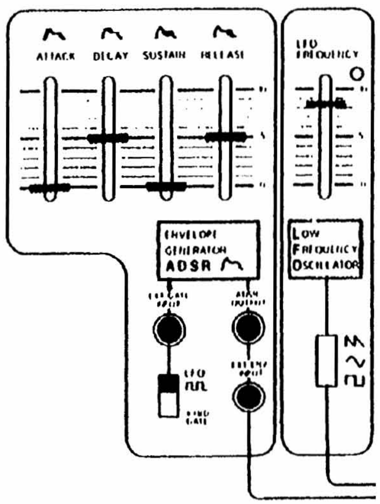

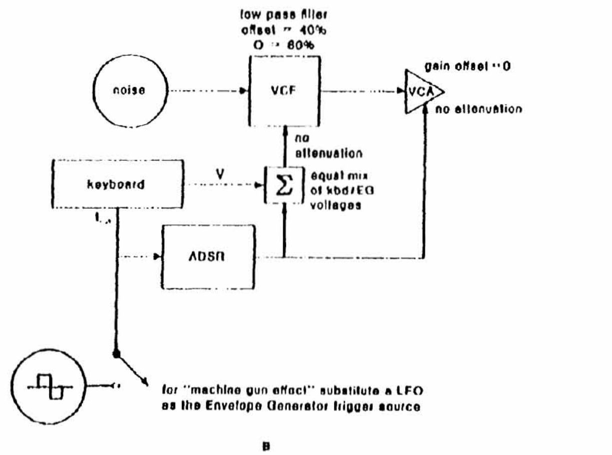

Figure 6.63. Roland 100 Patch (From the Roland System-100/ Synthesizer 101 Patchbook. Roland Corporations. Used by permission.)

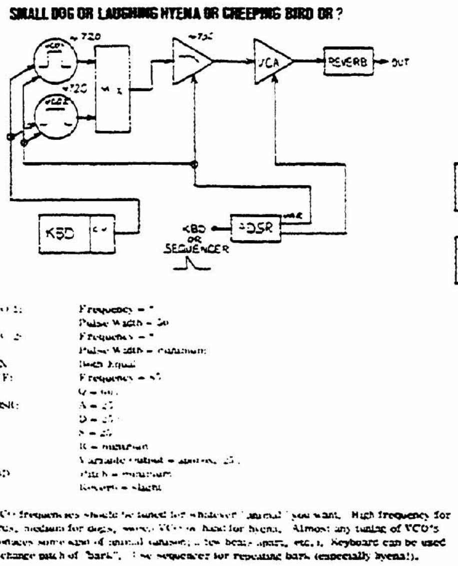

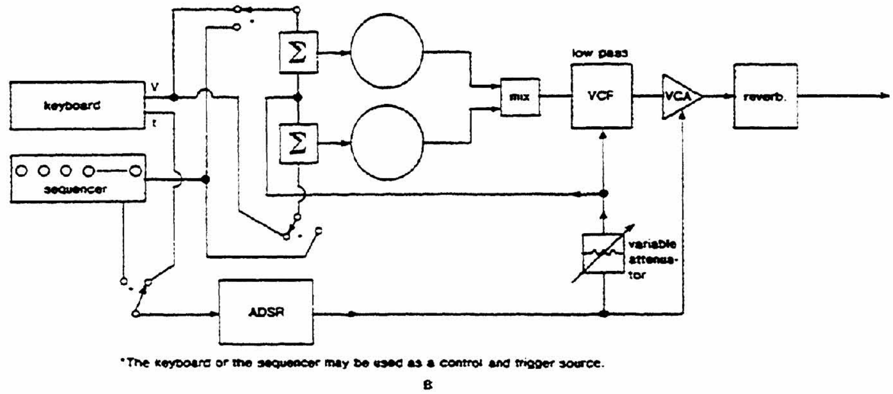

Figure 6.84. PAIA patch (From *The Source, Book of Patching and Programming from Polyphony* Magazine. Used by permission.)

7 Sub-Audio Modulation

Chapter 6 dealt with the control of the basic parametric stratums of electronic sound. In most instances each parameter; pitch timbre, loudness, time, etc., was being controlled by a single voltage source and in each case the controlled parameter was essentially one-dimensional. The terms "expressive playing" very often can be related to multiple layers of parametric control. A "beautiful vibrato," "icy tremolo," "growling bass," or even "fuzz-tone guitar," are terms describing additional levels of control. A singer with an expressive vibrato is exercising two levels of pitch control. The first is the basic pitch selection and the second is minute pitch fluctuations (along with small amplitude variations) around the central pitch. Each pitch choice is then enhanced by the other level of frequency control, the vibrato. A mandolin player idiomatically tremelos sustained pitches. A tremolo is rapid repeating changes in loudness. But the mandolin player can tremolo loud, soft, and emit any amount of crescendo, and dimuendo in between. This second strata of control is technically referred to as *modulation.*

Modulation Defined

In electronic music instrumentation the term "modulation" is often applied in ways which make instrument configuration and response confusing to the general user. Manufacturers differ in their use of the term, and within the current literature of electronic music thre is not a general agreement on its definition. Consequently I am hard-pressed to offer a definition which can encompass every application of modulation processes. In the initial stages of the investigation I believe that all bases can be covered by saying that modulation is a level of parametric organization involving control voltages which are generally faster than the main "articulation" level of control. Modulation may be used as an enhancement of pitch, loudness, timbre, etc., or it may be used to the degree that actual mutations of sonic events are heard. As a point of clarification let's again refer to the violinist. The fingers on the left hand control two simultaneous levels of pitch; and the general pitch articulations are determined by where on the fingerboard the finger is placed. Usual performance practices then require the player to add additional pitch information with the same finger by rocking back and forth around the articulated pitch to produce the characteristic vibrato. Both levels of control tend to pitch. As the performer articulates a scale, each note in that scale receives further information in the form of smaller and faster pitch variation. Now consider the player gradually widening and slowing the vibrato to the point that it becomes a repetitive glissando moving up and down the neck of the instrument. What was the vibrato control has now been transformed into a general pitch articulation. At this point the player can choose to reinitiate the smaller and faster pitch changes in the form of a vibrato within the ongoing glissando. The modulation (in this case, vibrato) is then defined by a level of musical structuring. A keyboard controlling a VCO produces basic pitch articulations on one level and another control source may produce enhancement of these pitches on a second level. In another situation a slowly clocked sequencer may be supplying general pitch information, and two keys of a keyboard could be used to produce an ongoing trill. This event would, of course, be more efficiently accomplished by reversing the controls, but it serves to demonstrate that "modulation" as used in this text, is determined by the level of parametric structuring to which it is applied—not on the source of the voltage.

With electronic instrumentation, modulation may be taken to the degree that is becomes more compositionally interesting than basic pitch, loudness, or timbre articulations. The effect of the modulation is still in reference to a generalized pitch, loudness, or timbre, whether it be determined by a manual offset or an external control voltage source.

Frequency Modulation

Configure the patch illustrated in figure 7.1. The sine low-frequency oscillator is patched to a control input of a VCO set at about a-440. The manner in which this patch is set up may be different from instrument to instrument. On instruments having AC/DC compatability such as the Roland, Moog, ARP simply

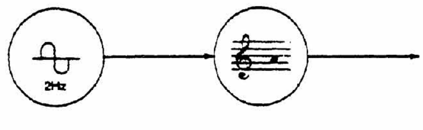

Figure 7.1. Sub-audio frequency modification

patch from the output of one oscillator to any attenuated input of another oscillator, observing the specified frequency offsets. For the present, turn the attenuator to minimum. On systems designed with AC/DC distinction, such as Buchla instruments, there are specified modulation inputs which accept only AC signals. In this case the input may be marked "FM" or "frequency modulation." At this point there arises a problem in terminology inherent in producing a general text covering a variety of instrument designs. Control inputs on modules, especially VCOs, will vary both in terminology and manner of control. Any player familiar with a variety of instruments is barraged with terms like "AC input," "DC input," "keyboard input," "FM" or "frequency modulation" input, "exponential" and/or "linear input," "attenuating input," "fixed voltage" input, etc. Approaching the subject of modulation with any sanity requires at least a cursory understanding of what all this means.

The term modulation literally means "change," and any control voltage will, of course, cause a change in the controlled parameter. On smaller ARP keyboard oriented instruments all of the VCO control inputs are generalized as "frequency modulation." Typical keyboard control is not what is generally understood as frequency modulation, although a keyboard might be patched in through any of the inputs. The Moog 921A VCO has inputs marked "A.C. Modulate" and "D.C. Modulate." These inputs provide "linear" response to control voltages (see page 35), and therefore traditional keyboard octave relationships will not be possible. Eu and Roland instruments, among others, have dedicated 1 volt/octave inputs, often marked "keyboard." Buchla instruments have control inputs which are distinguished by the type of jack used,—mini-phone and banana,—as well as a fixed sensitivity "keyboard" input on the 259 signal source. What we shall use for modulation inputs is any attenuating input which can accept a signal from another oscillator. If you have the choice of linear or exponential inputs, use the exponential. If there is an AC/DC discrimination, use the AC input which is usually marked "FM" or "frequency modulation." On Moog instruments use a frequency control input on the 921 Oscillator Driver. On the small keyboard performance instruments a modulating source is often accessed by a switch or pre-patched to an associated attenuator. Thus, by any means available get a low frequency waveform, preferably sine, into an attenuatable control input of another VCO.

Modulation Parameters: Index, Program and Carrier

By gradually raising the attenuator for this input, you will hear the frequency of the audio oscillator begin to change in accordance with the speed and shape of the low frequency oscillator (see figure 7.2). The intervallic displacement of the pitch will be in direct proportion to the *amount of attenuation;* this is referred to as "modulation *index*," or depth of modulation. This is no different than attenuation of any other control voltage, but use of the term "index" immediately tells the musician what level of structuring is being dealt with.

We must further distinguish between what is doing the modulating and what is being modulated. The terms which will be used consistently in this text are *program* and *carrier*. Again there are varying preferences for these distinctions. The "program" signal is the source of the modulation. Other terms in use are "modulating signal," "modulation source," "modulator," etc. "Carrier" will always refer to the parameter being affected, in the case of FM, the frequency of a VCO. The musician may encounter terms such as "modulated signal" and even "other."[1] The terms "program" and "carrier" are taken from broadcast terminology (AM and FM radio), easy to enunciate, and they accurately delineate the relationship between the two signal sources. The program in fact "programs" the carrier as to how to behave, and the carrier "carries" the program information in the same way vibrato information is carried by the musician's central pitch.

1. A tongue-in-cheek suggestion from the people at Eu instruments.

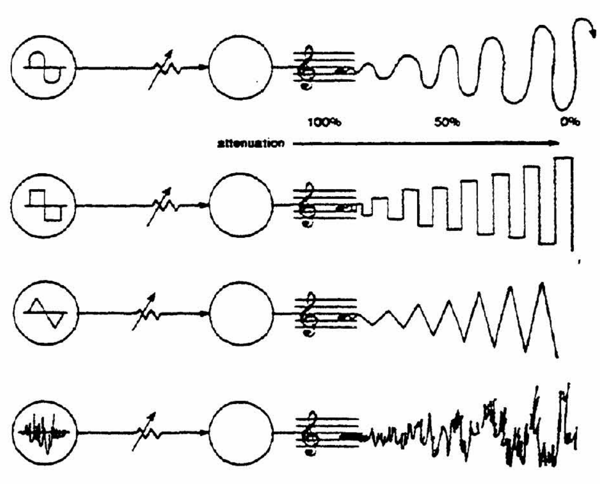

Figure 7.2. FM with increasing index and different waveforms

Now alter the patch in figure 7.1 by using a square wave as the program or modulating signal. Again vary the index and listen to how the pitch variation is affected (figure 7.2b). Try this for all available waveshapes. Note that the shape of the program signal is imposed on the carrier and can actually be heard as a modulation characteristic. Try the same patch, this time using noise as the program signal. In this case a repetitious fluctuation will not be heard, but rather will result in a harsh distortion of the carrier signal, depending on the index. Remember that noise is all possible frequencies at random amplitudes. Thus the logical modulation result would be very rapid pitch fluctuations with different magnitudes of pitch displacement. The noise is producing noise components of frequency centered around the carrier signal. Compare a white noise program with a characteristic pink noise program. This is a technique for producing various "flavors" or colors of noise and is covered in detail on page 123.

Program Signal Parameters

Efficient use of modulation requires more detailed information about oscillator voltages. Figure 7.3 compares the oscillator output signals of a Moog 921B VCO, ARP 1004p VCO, and an Eu 2200 VCO. The Moog signals have a nominal 1.3 volt peak-to-peak value, the ARP has a 10 volt magnitude: the sine and triangle exhibiting a 5 volt swing on each side of zero volts (+ and −5), and the others being 10 volts on the positive side of zero. The Eu outputs have a bi-polar (positive and negative) 10 volts swing, except for the sawtooth which is only five volts positive. These different magnitudes and references to zero will each result in a different carrier behavior. A bi-polar program voltage will cause carrier modulation above and below the center frequency, proportional to the magnitude of the program signal's voltage. If the program signal is only on one side of zero, as the Eu sawtooth, the carrier's pitch will only be driven up and will not go below the carrier offset frequency. This admittedly causes problems in consistent approaches to structuring, but this can be handled if the musician keeps the general principles in mind. THE CARRIER WILL RESPOND TO THE SHAPE, MAGNITUDE, AND FREQUENCY OF THE PROGRAM. The program's shape is simply the waveshape. The magnitude is the product of the magnitude of the program oscillator output *and* the index. The frequency of the program signal determines how fast the carrier will change frequency. A bi-polar program signal will cause the program to fluctuate above and below its center frequency, and a program on one side of zero will result in frequency changes on one side of the carrier frequency only. It is essential to spend

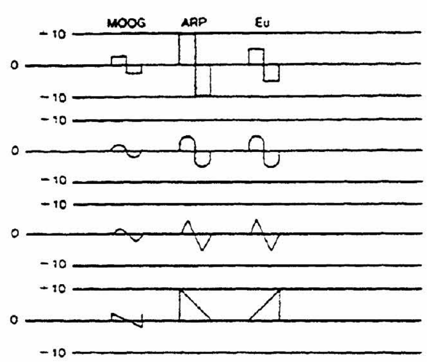

Figure 7.3.
Waveform magnitudes

some time experimenting with your instrument, using the patch in figure 7.1 with all available waveshapes.[2] If you listen carefully you may notice that a bi-polar program, if symmetrical, drives the carrier [the same interval] above and below the center pitch. This can be experimented with, using a bi-polar squarewave. Set the program for a very low frequency so that when it reaches its positive peak you can actually discern the pitch of the carrier. Adjust the index so that the carrier is modulated up a major third. If the program is symmetrical when it reaches its negative peak, the carrier will fall a major third below the carrier's center frequency. Experiment with the index in tuning the carrier frequency excursion to precisely tuned intervals as if you were tuning trills.

Applications

Now let's turn to some of the applications and controls of specific instrument configuration. The following patches are just a few suggestions for basic design which can readily be expanded by using different kinds of controllers and control functions. Set up the patch illustrated in figure 7.4. A keyboard and a sub-audio oscillator (LFO) are patched to a VCO. Tune the keyboard to 12 tone-equal-temperment and set the modulation index for a suitable vibrato. The discrete keyboard voltages determine the VCO's center frequency, and the vibrato is supplied by the program oscillator. If the index is not changed, note that the amount of modulation is the same for every pitch. By keeping one hand on the index pot (the attenuator) it is possible to vary dynamically the amount of modulation. Try various kinds of articulations: begin a note with zero index and gradually raise and lower

2. Some oscillators produce waveforms with a certain amount of "DC offset." Simply explained, this is a measure of unbalance between the voltage magnitudes of a waveshape or extra DC voltage accompanying a waveshape. This offset will cause a shift in the offset frequency of the carrier oscillator, and you may wish to retune after the program has been connected. This can be either trivial or critical, depending on the design of your instrument.

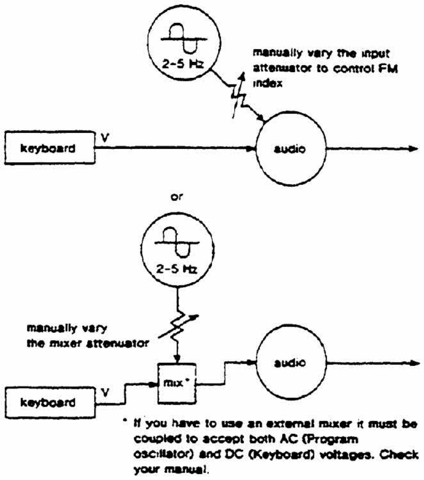

Figure 7.4. Dynamic index

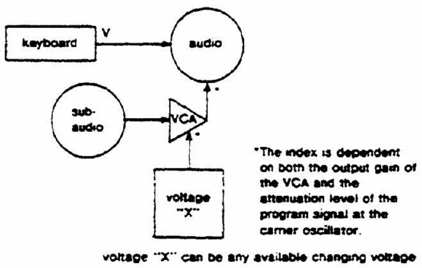

Figure 7.5. Voltaged controlled FM index

the attenuator so that the vibrato has a dynamic shape within each different pitch. Listen to how a concert violinist, concert guitarist, or even electric guitarist controls the vibrato parameter.

The amount of vibrato or index is an important variable in the shaping of individual notes and phrases. It would then be useful for electronic instruments to have this option when needed. Modulation index is merely a measurement of the magnitude or amplitude of the program signal. Since amplifiers control amplitude, a VCA may be incorporated in the patch to provide voltage control over index. Some instruments have voltage controlled index as an integral part of a module. Even if this is the case an explanation of this technique will facilitate the understanding of what is involved. The configuration in figure 7.5 is commonly used for *voltage controlled index*. The program signal is patched through a VCA before it is connected to a control input of the carrier VCO. Modulation index is now dependent on two variables; the attenuation level at the carrier input and the gain of the program VCO. The normal procedure is to raise the program oscillator's gain to maximum, set the maximum desired index on the carrier with the attenuation pot, and then turn the VCA gain back to zero. Now modulation index can be controlled by applying different control functions to the VCA.

Correlation of Modulation Index with Other Parameters

Several common techniques are illustrated in figures 7.6A-D. Figure 7.6A uses a keyboard triggered EG to control modulation index and the loudness of the carrier. When a key is depressed the EG initiates its function: a sharp attack followed by a long decay. This same voltage is used for VCA 2 which is, in effect, control of the modulation index, the program signal having the same attack and decay as the carrier. On the attack the program gain, or index, is at maximum and will decrease in direct proportion to the envelope decay. Expressed in other terms, there is maximum vibrato on the attack, becoming less apparent as the sound decays. The function can be reversed by using a long attack and a sharp decay. With the envelope generator in a sustain mode, both the carrier's loudness and the modulation index will hold in proportion to the sustained voltage magnitude.

Figure 7.6B utilizes an inverse relationship. Here the envelope voltage is inverted before being applied to the index controller (VCA). In this case the sustained sound (the VCA being at full gain due to inverted control) will have *minimum* index, and the index will *increase* as the sound decays. Keep in mind that the maximum index will be determined by the attenuating input on the carrier VCO. Figure 7.6C adds further refinement by controlling index with keyboard pressure. With this configuration the index can be "played" and precisely varied within the context of any note. Consider the use of other kinesthetic controls as a direct control of index. Figure 7.6D uses just the opposite approach, since the index is determined by a random voltage source. If this were a triggered RVS a keyboard could supply the timing pulse so that every pitch would have a new random index.

Figure 7.7 takes this patch a step further by subjecting index control to an unassociated control. One player is determining pitch control with a keyboard. The program oscillator is patched through a VCA for index control. In this configuration the index is controlled by a detected signal from a second player. The louder the musician plays, the higher the detected voltage and the greater the index. This patch goes beyond the traditional method of vibrato control, but that is one good reason we have electronic instruments!

Delayed Modulation Index

Figure 7.8 shows another configuration which is built-in to many performance systems such as the Roland SH-5, CAT-SRM and others. Again taking a model from acoustic traditions, some vibratos are characterized by a delay in the index, the vibrato not taking effect until sometime after the sound has been initi-

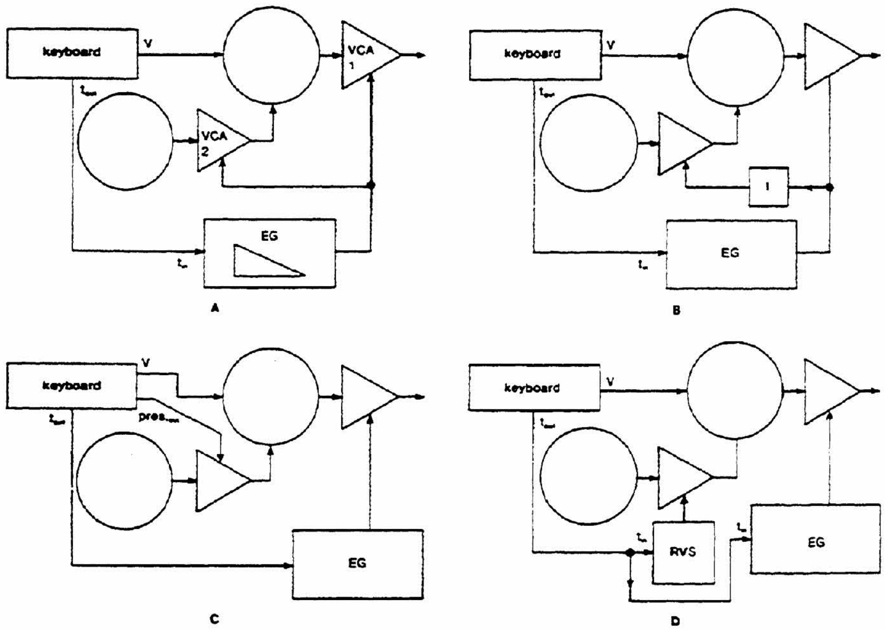

Figure 7.6. Voltage controlled FM index applications

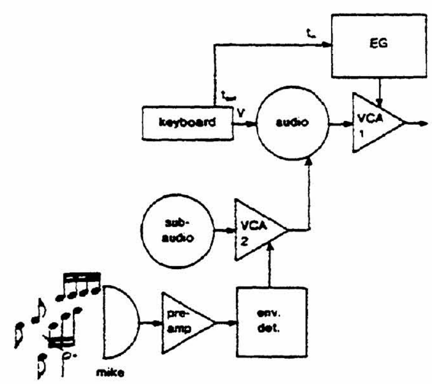

Figure 7.7. Index control with an envelope detector

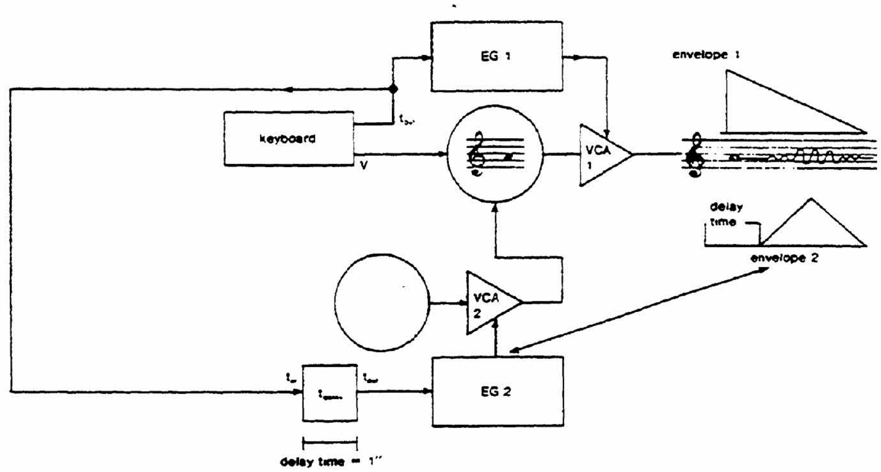

Figure 7.8. FM index delay

ated. This effect can be replicated by using a trigger delay (refer to page 64). A timing pulse initiates an envelope, and the unmodulated signal is heard. The same timing pulse is patched to a trigger delay which is set for an appropriate delay period, perhaps one second. After one second EG 2 is triggered and its voltage determines the modulation index via VCA 2. Once EG 2 is triggered the index may take on the various evolutionary shapes previously described.

Programmed Pitch Ornamentation

Another way to describe sub-audio FM is as pitch ornamentation. A series of trills as notated in figure 7.9 could be produced by FM with a sub-audio squarewave. Assuming that the trill would have to be to or from an upper auxilliary pitch, the program waveshape would have to be a positive value only. If the square wave were positive and negative the effect would be instant FM through the center pitch which would never be heard. Different performance practices require that trills begin either on the pitch or on the upper auxilliary. If the program square wave is a free running oscillator it will be impossible to maintain the notated rhythm and articulate every pitch coincidental with the zero voltage level or positive peak phase of the program signal. There are several solutions to this problem, one of which is possible with a *waveform clamping oscillator* such as the Moog 921 VCO. This design allows the performer to select any point on the waveshape, and then, upon application of a timing pulse, the waveform will reset to the specified position and continue to evolve from that

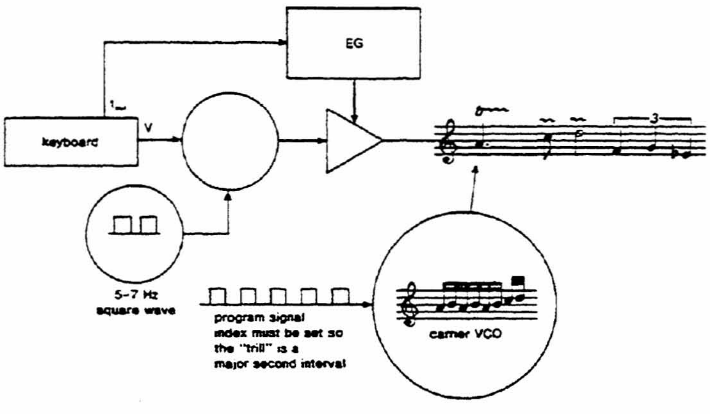

Figure 7.9. FM trills

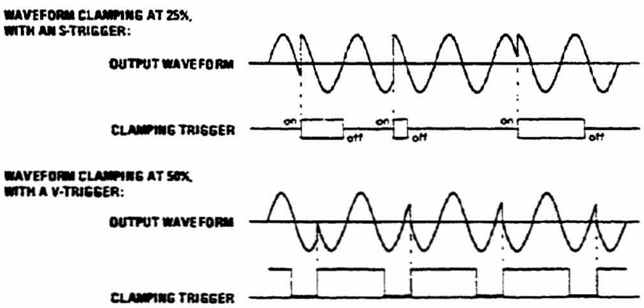

Figure 7.10. Moog 921 waveform clamping

point. On the Moog 921 the clamping point is specified by a pot calibrated from 0% to 100% of a waveform's cycle. Figure 7.10 illustrates a sine wave clamped at 25% and 50%.

The patch in figure 7.11 can then be used to guarantee that each FM trill begins on its upper auxilliary. The keyboard supplies pitch information to the carrier VCO and produces timing pulses for two EGs and clamping commands. As a key is depressed EG 1 determines the loudness and articulation of the signal, and EG 2 controls the index evolution. VCO B, the program signal, is a square wave clamped at 0% (or slightly above) so that it will initiate an upper trill every time a key is depressed.

Further dynamics could be added to the trills by dynamically varying the program pulse width. However, this is possibly an academic example as the keyboard player could certainly execute the needed embellishments directly from the keyboard. Consider, however, the passage notated in figure 7.12. Out of a sequence of eight events only three selected pitches have FM trills, each of which must begin on the upper auxiliary. We will assume that this has to be a programmed pattern, as the performer is handling some other aspects of the music. One solution is to use a sequencer's individual timing pulse outputs as cueing information to initiate the FM and to control the clamping. Pulse outputs 2, 4 and 8 correspond to the pitches to be modulated. These pulses are used to trigger an envelope generator which in turn opens up the VCA. The EG's 'on' time should correspond to the note duration, therefore the function should probably be controlled by gating information. The index could abruptly be gated on to generate the correct interval or could be controlled by various envelope contours. A sequencer timing pulse simultaneously clamps the program oscillator to the desired point in the waveform.

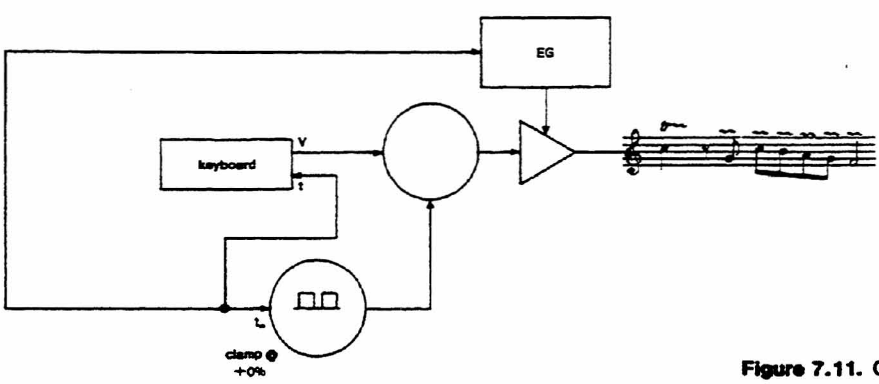

Figure 7.11. Controlled trills with clamping

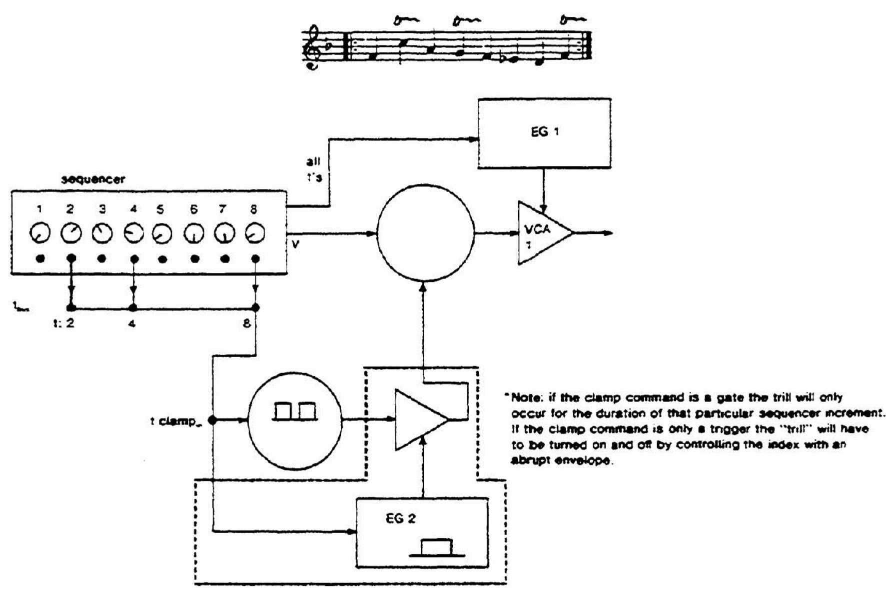

Figure 7.12. Selected FM trills with sequencer commands

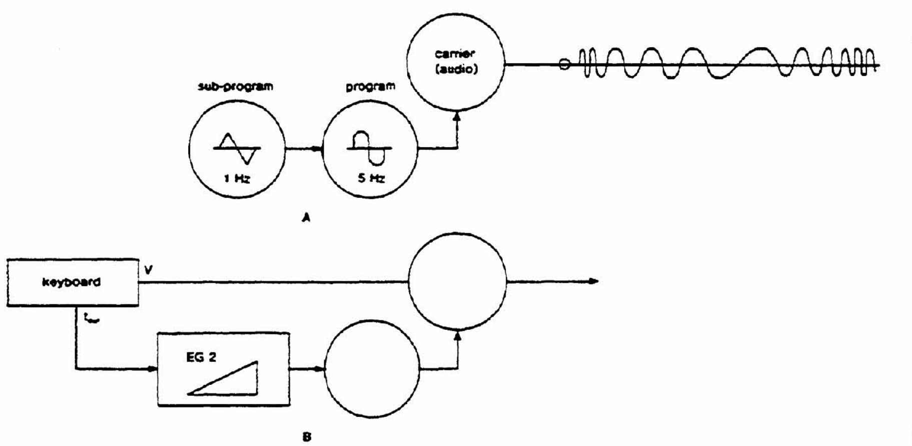

Figure 7.13. Double FM

Double Frequency Modulation

Figure 7.13 illustrates some techniques of double FM; the frequency of the carrier itself is being modulated. In figure 7.13A a 1 Hz sine wave is modulating the frequency of a 5 Hz square wave which in turn is modulating an audio VCO. The best thing to do is patch it up and listen to it, keeping the index of oscillator 2 moderately low. Since two oscillators are responsible for program information, oscillator 2 might be referred to as "program" and oscillator 3 as "sub-program." In this instrument the vibrato *rate* will change in accordance with the waveshape of the sub-program, becoming faster as it goes positive and slower as it goes negative. Figure 7.13B is a form of double modulation, but now in the "sub-program" is a function generator, in this case an EG (EG2) with a long attack. The resulting sound will be a gradual increase in vibrato rate as EG 2 produces a slowing rising voltage. The EG might well be replaced by a falling edge sub-audio sawtooth, but we would lose the advantage of triggering the function when to start, unless clamping is possible. I think that the reader may now begin to realize the difficulty of trying to formulate an all encompassing definition of modulation. Any changing voltage source, be it repetitive, non-repetitive, AC or DC, audio or sub-audio, can serve as a modulation source. The only way to distinguish modulation from the other controls covered in chapter 6 is in terms of the structure itself. Perceived modulation is carried by a slower change in structural decisions. In the case of FM the center frequency of the carrier is either manually offset or played by a voltage function. The FM information is then added by the voltage of the program signal.

The initial applications of modulation have been put in terms of FM, simply because it is easy to hear. Once the basic concepts of program and carrier relationships and index are understood, the modulation of any other parameter can be readily comprehended.

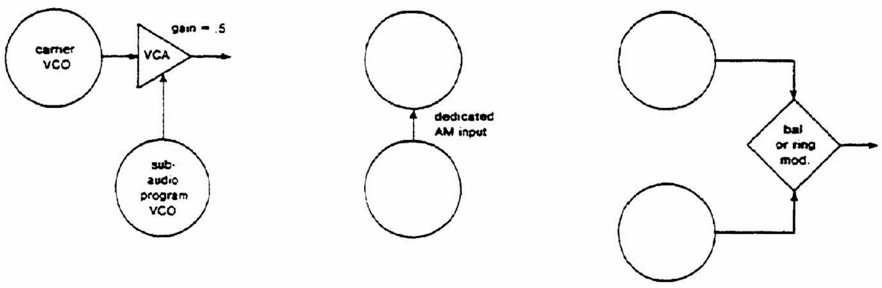

Figure 7.14. Sub-audio amplitude modulation

Sub-Audio Amplitude Modulation

Amplitude Modulation Parameters

The basic AM patch is illustrated in figure 7.14. Any carrier sound source is taken to a VCA and the program signal is used as a control. As the voltage of the program signal rises, it proportionately raises the gain of the VCA, resulting in what is traditionally called tremolo. There are two factors which must be considered when using an AC signal as the program: first, the VCA must be offset at some point above zero gain so that the negative phase of a program signal can have a positive *and* negative effect (if the VCA is offset at zero there would be no sound during the negative phase and the positive phase would sound like gain control with a cycling EG.); the second consideration is whether or not your instrument has AC/DC compatability. If the VCA will not accept an AC signal there are two options. The first is to turn the AC signal into a DC control using an envelope detector (refer to page 53); this can consume many of EDs and patchchords when the patches get complicated, and the ED may not react fast enough for many applications. The other option is to use a *balanced modulator* or *ring modulator* for a VCA whenever AC control is required. A VCA is typically a two-quadrant multiplier, and a balanced or ring modulator is a four-quadrant multiplier. A four-quadrant multiplier can produce an effect known as "negative gain" or "gain inversion." A silence, of course, cannot become any softer, but the result is a typical phase-cancellation which has a quite different audible effect when modulating at audible program frequencies. With sub-audio AC program signals or DC program the balanced modulator and VCA will do almost the same thing and may be inter-changed in exploring the following patches. The typical applications of ring and balanced modulators are discussed in chapter 8. Most VCAs will accept AC control so that the patches for this section will be notated as such.

Patches

Most of the instrument configurations given for FM can be transferred for AM applications. The only additional variable which must be considered is whether or not the VCA has linear or exponential response. Reviewing chapter 4 page 24, linear response means equal changes in gain (output voltage), and exponential means equal changes in loudness. What this means in terms of AM is that in linear mode the affects will be more drastic than in exponential mode. If you have a choice use the linear mode for the following patches. If you don't have a choice, don't worry about it.

Like FM, some instruments have built-in voltage control of AM index. As with the FM patches this is the same as taking the program signal through another VCA or multiplier before it reaches the modulating circuit, in this case another VCA. The Buchla 100 Series Squarewave VCOs have an AM input on the front panel, and therefore an external VCA may not be needed for many of these patches.

Figure 7.15A provides for tremolo within the context of generalized loudness control from an EG. VCA 1 (offset above zero gain) affects the AM parameters, and VCA 2 controls the general loudness. Note that in figure 7.15B the program voltage and the envelope control can be summed as is done with some FM patches. With this patch the program signal will continually open the VCA and never decay to silence, defeating the effect of the EG.[3] Remember that a voltage multiplier can be substituted for the series VCA since it accomplishes the same effect (see figure 7.15C). Figure 7.15D involves a minor variation of 7.15A which can be useful in producing echoing effects. Here the program VCA is offset to zero, therefore the carrier signal only gets through on the positive voltage swing of the carrier. This will be more effective if the program signal is a descending sawtooth wave. Now even if VCA 2 is open the sound will be gated on and off in accordance with the program waveshape, assuming that the waveshape is bipolar. As the EG voltage decays the signals, general loudness decays proportionately, but the reiterated

3. With careful tuning this can be done by summing if the program signal is attenuated to the point that it doesn't result in an audible output signal. The Eu 2000 VCA has a mode switch that turns the summing inputs into multiplying inputs so that this patch is greatly simplified. The PAIA 2720-1 VCA uses algebraic C.V. summing, and this effect can be simulated by the use of an applied "bias voltage" or external offset.

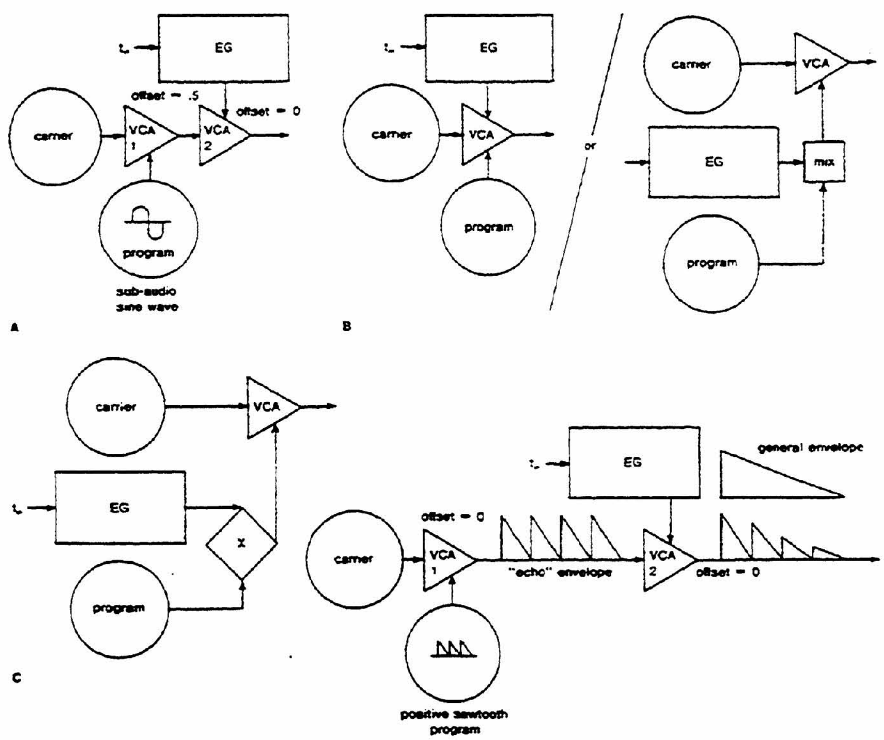

Figure 7.15. Sub-audio AM patches

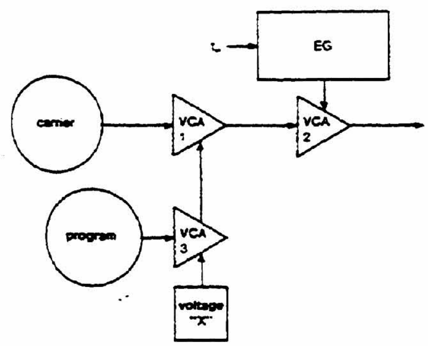

VCA 1—affects the amplitude modulation
VCA 2—the general loudness envelope
VCA 3—controls index (the gain of the program signal)
Voltage X—anything you wish to use!

Figure 7.16. Voltage control AM index

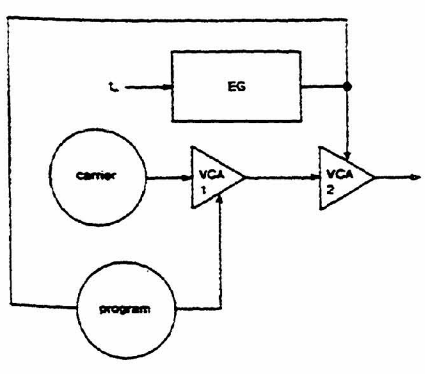

Figure 7.17. Correlation between general loudness and tremelo rate

echos are still articulated within the shape of the EG control.

Figure 7.16 illustrates a general patch for controlling AM index. The AM process itself is accomplished by the two VCA in series as in patch 7.15A. Here the index itself becomes a controlled parameter by patching the program through a VCA for gain processing. Now any voltage, an envelope, random voltage, the output of a joystick, etc., can determine the amplitude modulation index.

The patch in figure 7.17 correlates tremolo speed with general loudness. As the EG voltage increases the gain for VCA 2, it simultaneously causes the program frequency (VCO 2) to speed up. With this patch the program VCO should be offset to the lowest desired tremolo rate and the EG control processed so that the oscillator is never taken above 13 to 15 Hz. The precise range of desired tremolo variation can be tuned by the offset and index pot. Figure 7.18 is the patch for delayed AM. Compare this patch with the delayed FM patch (figure 7.8, page 101). A word of caution is to be sure that the delay time is not longer than the total envelope function time, or the resulting modulation will not be heard!

The number of modules used for dynamic AM is significantly reduced if the parameters (AM signal input and voltage controlled index) are built into a VCO. Not many commercially available VCOs have these features, therefore, make the most out of the patches documented in this section. Try all possible

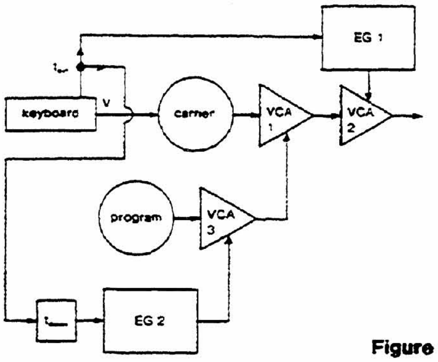

Figure 7.18. AM index delay

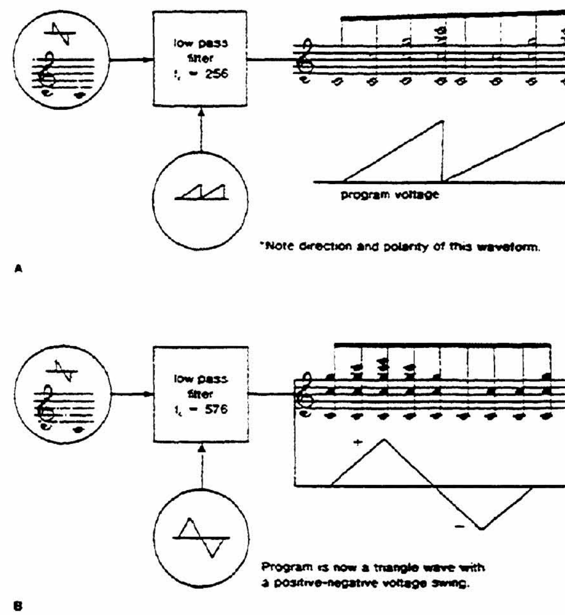

Figure 7.19. Filter modulation (filter sweeps)

waveshapes from sine to a narrow pulse. Experiment with various program frequency offsets to see how fast each waveshape can be used until the carrier pitch begins to be distorted. At this point don't spend too much time with audio rate AM as there are a sufficient amount of variations possible with sub-audio program frequencies. The musician need not limit the explorations to electronic sound sources. Most of the patches can just as well use any properly pre-amplified acoustic sound. A solid-body electric guitar or direct signal out of an electric piano will be ideal, as the acoustic signal will not be loud enough to mask the modulation effects.

Timbre Modulation

Dynamic timbre control can be approached several different ways. *Timbre Modulation* (TM) can be the result of filter modulation, pulse width modulation, synching techniques, carefully tuned audio FM & AM, balanced modulation techniques, tricks with voltage controlled reverb and time delay, etc. Many of these techniques require specialized instrumentation; the various operation manuals supply ample information about these processes. The most viable techniques applicable to electronic music instruments in general are filter modulation, pulse width modulation (PWM), and synching. Some instruments also provide the player with possibilities of direct waveshape modulation.

Filter Modulation

The techniques of AM are readily transferred to filter modulation, simply substitute a voltage controlled filter (VCF) in place of a VCA. A voltage controlled filter may be of the low-pass, band-pass, high-pass, or band reject variety; and techniques specific to each of these covered in chapter 9. The most common VCF is the low-pass filter, and the following filter modulation patches will be done in terms of low-pass applications. All of the patches can be readily applied to any filter format once the technique is understood (see exercise 4, page 110). Figure 7.19A-B illustrates the basic low-pass filter modulation, the carrier being a C-256 Hz sawtooth and the program being a 1 Hz signal. The illustration shows a variety of program waveshapes. With filter modulation special attention must be given to the filter's offset and the index (control voltage attenuation level). As the program sine wave voltage rises and falls it continually and correspondingly changes the filter cut-off.

In figure 7.19A the filter is offset so that its cut-off is precisely at the fundamental pitch of the sawtooth carrier, C-256. The program voltage of the filter's cut-off frequency is modulated upward, letting more and more harmonics through. This will be more evident if the filter Q is at about 50%.[4] The modulation index can be adjusted so that the program sweeps through a specific number of harmonics. Figure 7.19A specifies that the index is set so that the peak voltage of the program drives the filter only up to the 4th harmonic. Experiment with this patch and tune specific index values. Since there is no timbral information below the fundamental of the carrier, the negative swing of the program voltage has no audible effect with low pass filters. Figure 7.19B re-establishes the filter cut-off somewhere in the middle of the spectrum. As the negative portion of the program sweeps the cut-off below the offset there is some spectral information to affect.

A final consideration comes into play if the carrier pitch is changing. If the carrier is relocated, say by

4. For these patches leave the Q at a moderate level. Specific applications of Q variations is covered in chapter 9.

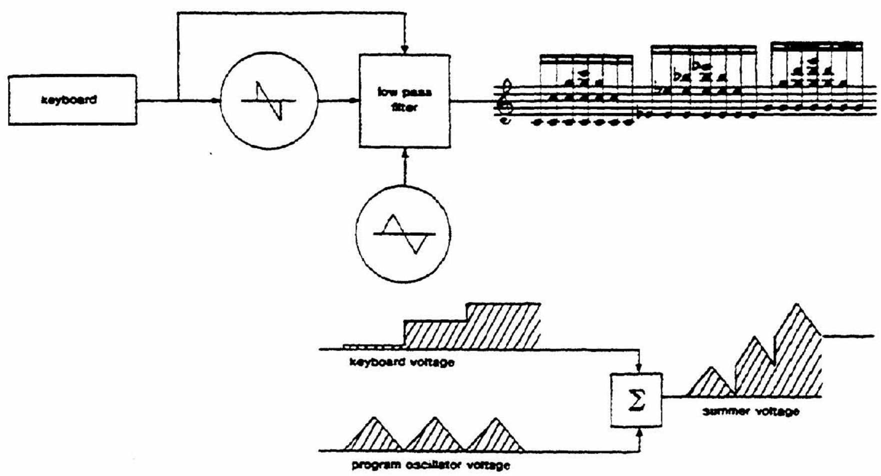

Figure 7.20. Filter tracking for constant filter modulation spectra

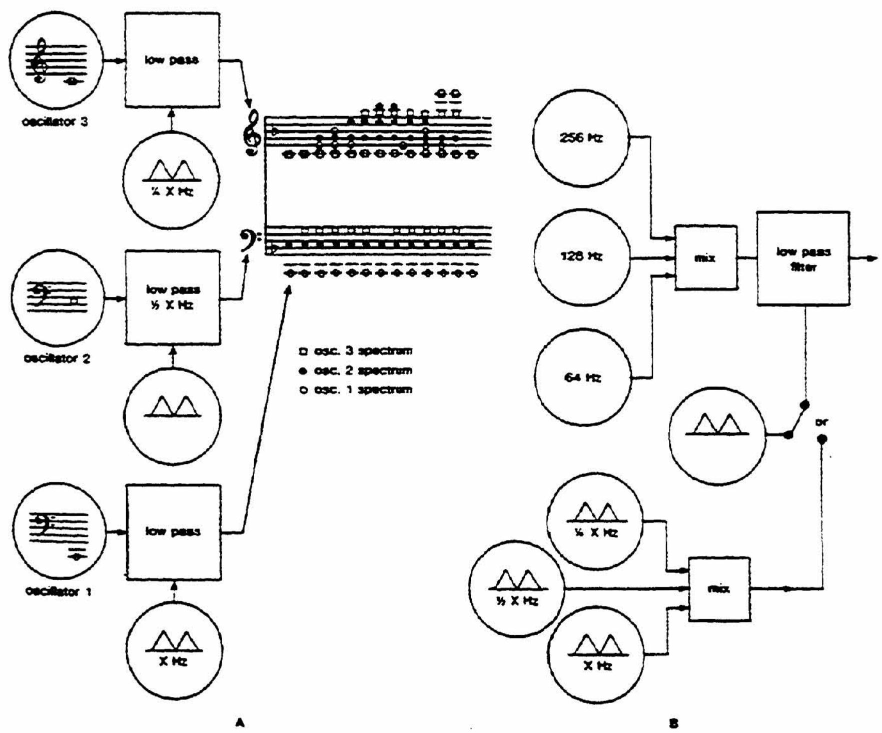

Figure 7.21. Drone patches with filter modulation and tuned square waves

a keyboard voltage, its relationship to the filter cut-off will change and the spectral modulation will not have the same effect. A similar problem is dealt with in figure 6.6 in the preceeding chapter, and the solution is the same. Use the keyboard voltage to relocate the cut-off frequency in direct relation to the VCO pitch, as illustrated in figure 7.20. With this configuration the program voltage will modulate the filter cut-off through the same part of the carrier's spectrum regardless of pitch choice. The techniques used for AM are directly applicable to filter modulation. Voltage controlled index, program frequency, simultaneous FM, etc., can all be accomplished by referring to the AM patches (figures 7.13 through 7.18) substituting a filter for a VCA.

Low program frequency filter modulation is very effective for creating *drone* environments. Figure 7.21 illustrates such a technique. Figure 7.21A uses three square wave oscillators tuned in octaves, each being filter modulated with a different program frequency. The tuning and program relationships may be of interest for structural considerations. Octaves of the fundamental frequency are not present in a square wave, thus octave relationships between the oscillators provide a rich spectrum to play with. The program frequency for each oscillator is in inverse proportion to the ration of the pitches. Oscillator 2 is twice as high as oscillator 1 and its filter modulation is twice as slow. Oscillator 3 is 4 times as high (in terms of Hz—remember exponentiallity!) as oscillator 1 and its

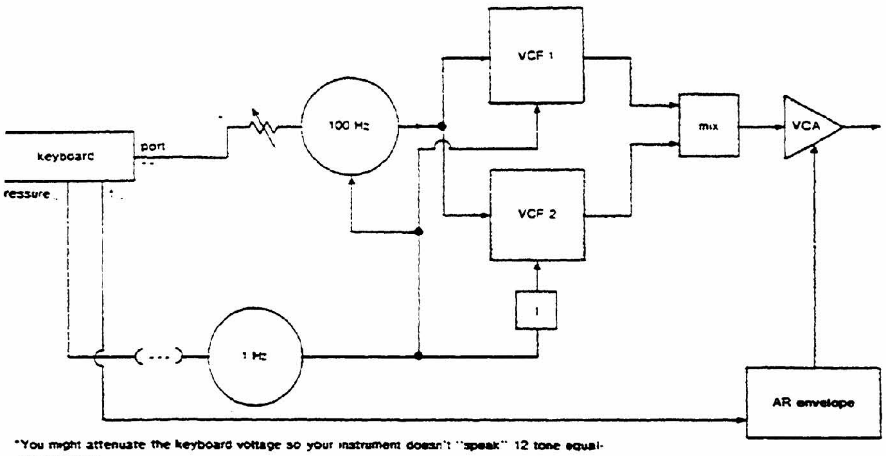

*You might attenuate the keyboard voltage so your instrument doesn't "speak" 12 tone equal-temperament
**Use a variable portamento keyboard voltage so the "voice" will glide and not "speak" in discreet steps
***Use any dynamic voltage available instead of keyboard pressure

Figure 7.22. Voice simulation with filter modulation

corresponding program is four times as slow. If there is just one filter available, try the patch in 7.21B. Here all three carrier pitches are subject to one program. If you have three low frequency oscillators available, try mixing them together to produce a composite complex modulation signal.

Figure 7.22 is a rather complex filter modulation patch which can produce some interesting "voice-like" sounds if carefully tuned. A sawtooth wave VCO offset at 100 Hz or lower is taken in parallel to two filters. Band-pass filters with a moderate "Q" will give the best results, but low-pass filters or a combination of both will work. If you only have one filter the results are not as effective but are worth a trial. A triangle wave LFO is used as a program for the oscillator frequency (FM) and both filters. If possible invert the program before going into one of the filters. The LFO is then controlled by some dynamic voltage such as keyboard pressure, a joystick, or even your hand. Tuning the filters to various relative cutoff frequencies will determine the "voicing." Use an AR envelope with various sustain and decay times and see what you get. This instrument involves simultaneous FM and filter modulation and works best if the indices are kept at a moderate level.

Pulse Width Modulation

Pulse Width Modulation (PWM) is another approach to timbre modulation. Chapter 3 (page 16, figure 3.12) explained how the duty cycle of a pulse wave could be varied to produce different harmonic spectra. If there is a control voltage input on a VCO for pulse-width or waveshape symmetry, the following patches will be of interest. It is necessary to be aware of the difference between spectral changes with filtering and spectral changes with pulse-width variation. Filtering provides linear access to overtone content. As a low-pass filter is swept by a program voltage it emphasizes each adjacent harmonic. Pulse-width variation determines what order harmonics are missing from the spectrum so the modulation of this parameter may affect more than one non-adjacent harmonic at a time (see figure 7.23). PWM with a sub-audio sine or triangle program sounds very much like the phasing or flanging techniques described in chapter 12 page 202. This effect can be emphasized by mixing the pulse-width modulated VCO with another harmonically rich VCO tuned at a unison. With this patch the various transient harmonics will be emphasized and de-emphasized as they move in and out of phase with each other. It will probably be noted that high index PWM above 7 or 8 Hz creates a slight pitch shift. PWM is, in fact, very low index frequency modulation. As the position of the duty cycle varies back and forth within one cycle there is an actual displacement of time reference, and frequency is a measurement of time. As with filter modulation, PWM can be applied in a variety of situations by duplicating the previous patches and patching the program to the PWM input.

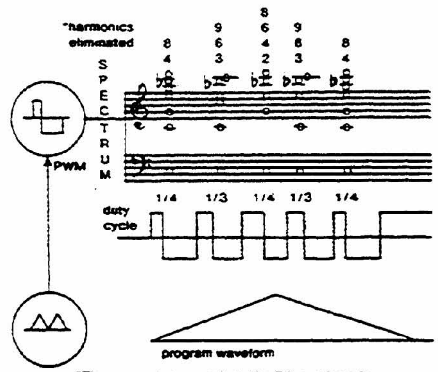

*This example goes only to the 9th overtone to keep things simple.

Figure 7.23. Pulse-width-modulation (PWM)

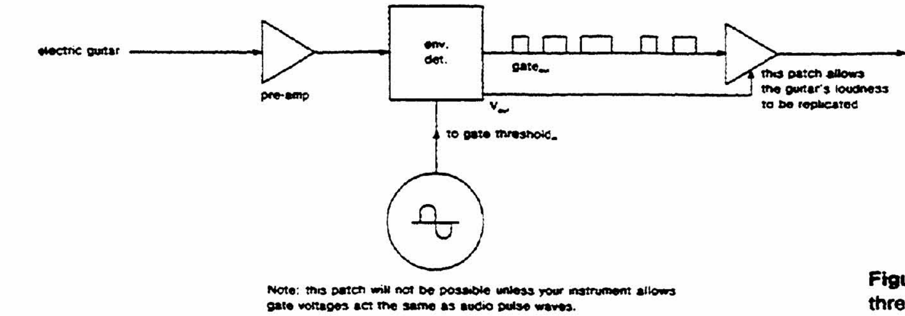

Figure 7.24. Simulated PWM using a voltage control threshold of an envelope detector

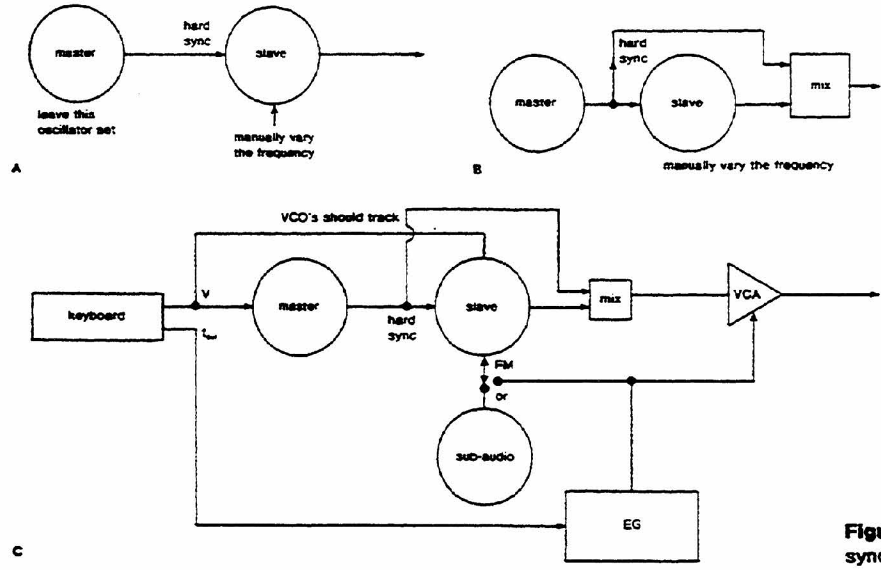

Figure 7.25. Timbre modulation using VCO sync

If an envelope detector or Schmitt trigger has an external comparator input and voltage controllable threshold it can be used to produce some interesting PWM effects with an acoustic instrument. Suitably pre-amplify the instrument, an electric guitar works well, and patch it to the comparator input as illustrated in figure 7.24. When the comparator input voltage is above the established threshold it will produce a gate voltage which will remain high for as long as the input is above the threshold. A low frequency sine wave is used to modulate that threshold so that the comparator generates a gate at changing points each time the comparator voltage goes through a cycle. The gate output is a pulse modulated voltage which may be used as an audio signal. In this case the comparator voltage is generating the carrier, and threshold voltage is generating the program. If the sound is too raspy for your taste, patch it through a low pass filter to remove some of the edges. I have seen this technique used with Eu and Serge instruments, and it should be possible with any instrument with external comparator inputs.

Timbre Modulation Using VCO Sync

VCO synchronization can be used with sub-audio FM to achieve effects sounding similar to resonant filter modulation. With "strong sync" (see chapter 3, figure 3.18) the *slave VCO* will try to lock on to the closest harmonic of the *master VCO*. If your instrument provides sync possibilities, set up the patch illustrated in figure 7.25A. Switch or patch the sync output (usually a square wave) from a VCO set at a low pitch to the sync input of another VCO and listen only to the slave oscillator. In "strong" sync mode, manually turn the slave's frequency up and down. You should hear, not a continuous glissando, but rather something more like high Q filtering or blowing through the harmonic series on a pipe. As the slave's frequency is changed it will try to grab the closest harmonic multiple of the master VCO frequency. If the slave VCO is frequency modulated the program voltage will drive the slave carrier up and down, replicating the harmonic series of the master. The slave's frequency offset will establish a reference point in the harmonic series, and the index will determine the extent of the harmonic sweep. Further color may be added by mixing the master and slave VCOs together as shown in figure 7.25B. This technique is especially effective if the slave's sweep is controlled by various modulation or voltage control techniques as illustrated in figure 7.25C.

Patterned movement of sound in a stereo or quadraphonic space involves specialized techniques with VCAs, balanced modulators, and frequency shifters. Due to the complexity of these techniques, location modulation is treated as a separate subject in chapter 13. Most of the aforementioned techniques may be applied to any voltage controllable parameter. If one understands the implications of variable index and the results of differing program frequencies and waveshapes, sub-audio modulation can add significant richness and expressiveness to a performance.

Exercises

1. Using sub-audio FM practice the following etude. By manually controlling index, progress through a series of tuned FM trills. Begin by adjusting index to a minor second, then major second, and so on up to an octave and back down to a unison. If the program square wave is positive polarity only, the exercise will function as in figure 7.26A. If the program square wave is bi-polar it will be more difficult, as illustrated in 7.26B. This is an exercise for both the hand *and* the ear.
2. Use a twelve stage sequencer to automate the previous exercise as illustrated in figure 7.27.
3. Analyze the instrument configuration in figure 7.28. What parameters are at work and what parameters are correlated with each other? This involves both FM and AM.
4. Using filter modulation, devise a patch which will produce the event notated in figure 7.29.
5. Invent an instrument in which you have voltage control access to all the parameters of sub-audio modulation of pitch, loudness, and timbre. The following listing can act as a guide.

    Program Oscillator Rate
    Index (Program gain and attenuation)
    Program Waveform (If you do not have voltage controlled waveform perhaps it might be possible to switch between different program oscillators in some manner)
    Carrier offsets (VCO, VCA and VCF)
    Also consider the possibilities of double modulation.

This patch will probably go beyond the resources of many instruments. However, it will be good conceptual practice to draw the patch out in several versions.

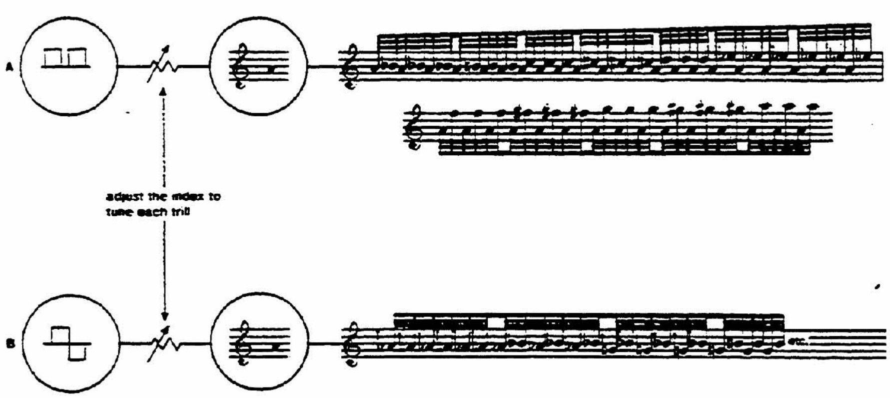

Figure 7.26. Interval expansion

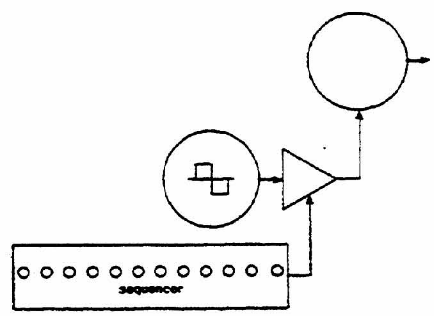

Figure 7.27. Trill programming

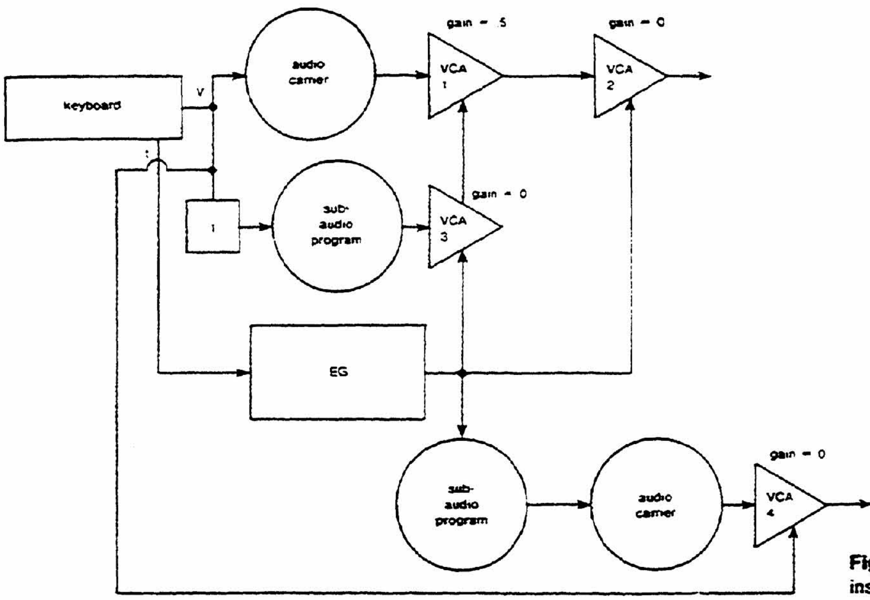

Figure 7.28. Parametric correlation in a modulation instrument

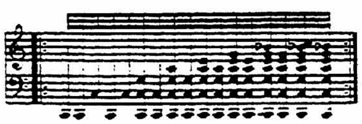

Figure 7.29. Programmed spectral trills

8 Audio Rate Modulation

In some of the previous experiments you undoubtedly have discovered that at a certain point the program frequency can become so rapid that the carrier information begins to undergo a critical change. This change may be described as a severe distortion or, in some cases, it may result in the production of additional pitches. With acoustic instruments the "program" is some sort of physical action on the part of the performer. The singer's vibrato is caused by variation in diaphram pressure; the fiddler's vibrato is the result of minute wrist and finger movements, and tremolo is controlled by the player's right hand actions. These program gestures are of course subject to physical limits of both the performer and the instrument structure: a vibrato can only be so wide and so fast, and these two parameters in many cases define each other's limits. Electronic instruments are designed with the potentials to expand these limitations. There is virtually no limit on how fast a VCO can be modulated; the index can be so high that it is swept through a parameter's entire operational range. There are practical limitations depending on the desired effect, and these will be pointed out as the various patches are discussed.

Sidebands and Timbre

The principle of audio-rate modulation is not complicated. If the modulating frequency is within the audio range the modulated parameter is being changed so fast that the modulation process generates additional frequencies. The modulation process will produce extra "ghost" pitches called "sidebands." Try the experiment illustrated in figure 8.1. Patch a sub-audio program sine wave to the FM input of a sine wave carrier and establish a moderate index. Leave the carrier VCO set at one pitch and gradually turn up the frequency of the program through its entire operational range. In this case the program cannot be a dedicated LFO, as it must go well into the audio range. As the program frequency is swept up you will hear extra pitches sliding in opposite directions from the carrier's center frequency. These are sidebands which are the *sum* and *difference* of the carrier and program frequency.

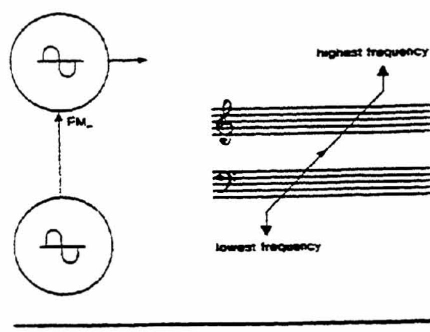

Figure 8.1. Audio-rate frequency modulation

If a 100 Hz program were modulating a 500 Hz carrier, the two sidebands would be 600 Hz, the sum, and 400 Hz, the difference.

Modulation affects every frequency component involved; this is the reason sine wave oscillators are suggested for initial experiments. If one of the oscillators were a sawtooth wave there would be the sum and difference of every frequent component present in the waveshape. Figure 8.2 illustrates one type of FM spectrum for the first five frequency components of a 90 Hz sawtooth program and a 500 Hz sine wave carrier. The actual number and strength of sidebands are also dependent on the modulation index. Repeat the experiment in figure 8.1 with different indices (program oscillator attenuation) and compare the sounds. Sum and difference frequencies are common to all types of audio rate modulation processes. These sum and difference sidebands result in a change in the timbral or spectral information of the original carrier. The spectrum may be harmonic or inharmonic, depending on the relationships established by the musician and the operational characteristic of the instruments.

This gives rise to the question of the difference between a "chord" and a "timbre." What is the difference between the spectrum of a square wave and the same spectrum played as individual pitches on an organ (figure 8.3)? There are several considerations. Most keyboard instruments are equal-tempered so that the "chord" harmonics are not really in the same ratios as a truly harmonic timbre. It is said, however, that the ear has a tendency to quantize and re-tune these relationships if they are within a certain threshold.

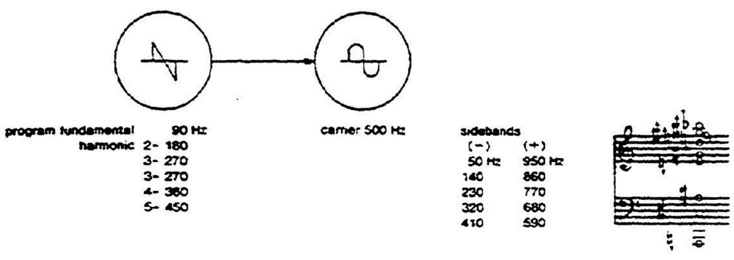

Figure 8.2. Frequency modulation sidebands
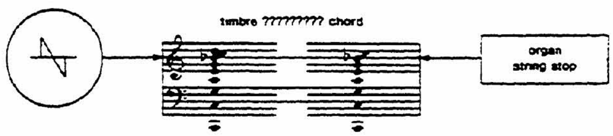
Figure 8.3. Chord vs. timbre

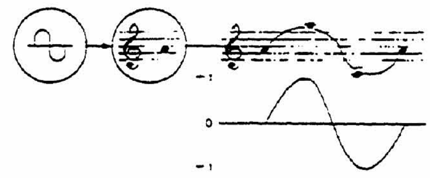

Figure 8.4. Exponential FM

Then comes the question of relative amplitudes. The sawtooth wave exhibits precise amplitude relationships between the harmonics which would be impossible to maintain on a keyboard instrument. But orchestrational techniques of doubling melodic lines at the octave, twelfth, etc., result in changes of timbre and are not heard as parallel chords (refer to the excerpt from Ravel's *Bolero* on page 18). The idea of harmonicity between the partials sheds no light on the subject, since many timbres such as drums and gong are not harmonic, nor are non-common practice chord structures. Many composers and researchers have been intrigued by this question, and certain compositions are based on the interplay between the threshold of a chord and a timbre.[1] Rather than describing the many complex psycho-acoustic considerations involved with resolving this question, this text will consider audio-rate modulation a timbral technique as it involves actual changes in the waveshape of a composite sound. The signal is *acted upon* instead of *added to* as in classic techniques of additive synthesis. The following discussions involve techniques of "modulation synthesis."

Audio Rate Frequency Modulation

Exponential FM

FM synthesis must really be divided into two categories: exponential FM and linear FM. The most common mode of voltage control of a VCO is exponential, equal changes in voltage produce equal changes in musical interval. This makes audio rate FM problematic in certain situations. Figure 8.4 illustrates this problem. A 2 volt peak-to-peak sine wave is FMing a carrier of A-440. As the program reaches its positive peak the carrier is taken up one octave to A-880, and as the program reaches its negative peak the carrier is taken down to A-220, an octave in each direction. The problem is apparent when the program frequency is in the audio range, as the ear does not register this two octave sweep but hears the sound as a composite complex signal. The carrier pitch goes up 440 Hz but comes down only 220 Hz. This means that in terms of frequency measurement the carrier goes higher than it goes lower, and the average center frequency, in terms of cycles-per-second, is changed. The result is that the perceived center pitch is de-tuned a significant interval. This also causes a redistribution in the relative power between the upper and lower sidebands. The apparent pitch shift is proportional to the index, as can be readily demonstrated with the patch in figure 8.5. Use the output of a VCO as its own program frequency and slowly raise the index. Note that the pitch relocation is determined by the index. This does not cause any real problem if the index can be set and not varied. It was apparent in the previous chapter, however, that modulation is most effective if the index is dynamic, subject to varying values during the course of each event. FM index determines the strength and number of sidebands so that it seems logical that this should be a dynamic variable. Unfortunately the index also determines the amount of pitch shift, and therefore the modulation spectrum cannot be changed without changing the pitch. Set-up the patch in figure 8.6 and the problem will be apparent.

The mathematics and ramifications of this problem are discussed in Bernie Hutchins' article, "The Frequency Modulation Spectrum of an Exponential Voltage-Controlled Oscillator,"[2] and are discussed with

1. The reader should listen to Jean-Claude Rissets *Mutations* (Turnabout 34427) and read Robert Erickson's *Sound Structure in Music* (Univ. of California Press, 1975).

2. From the *Journal of Audio Engineering Society*, 23, No. 3, April 1975.

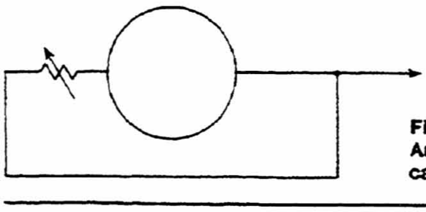

Figure 8.5.
Auto-FM to demonstrate carrier shift

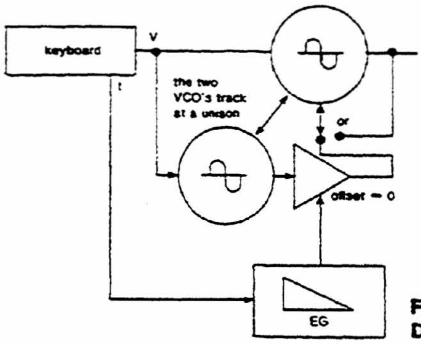

Figure 8.6.
Dynamic index FM

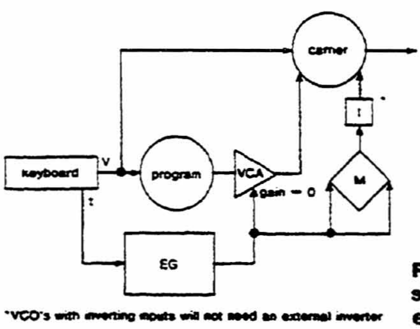

Figure 8.7. Frequency shift compensation in exponential FM

further details in his *Musical Engineer's Handbook*.[3] All we need to know for our applications is that exponential frequency modulation produces pitch shifts proportional to the index. This does not mean that it is not useful. If the pitch shifts are annoying you have to avoid the use of a changing index and adjust whatever tuning is needed after the index has been established. In some cases the detuning can be minimized by maintaining a low index at the VCO modulation input. Figure 8.7 depicts a patch suggested by Mr. Hutchins which can be tuned to eliminate pitch shifts. The index is controlled by some function generator such as an envelope generator. The control voltage raises the index via a VCA while at the same time its *inverted* form pulls the shifted pitch back down. The mathematics involved requires that the negative envelope be squared (not in terms of waveshape but in terms of math); this can be done by multiplying the voltage with itself, using a dedicated multiplier or a balanced modulator. This is one of the few patches in this text I have not personally tried but it looks good on paper and certainly worth a try.

3. Published by Electronotes, 203 Synder Hill Rd., Ithaca, N.Y. 14804, pp. 2c9-2c19.

Exponential FM Patches

Figures 8.8A, B, C and D are some suggestions for exponential FM applications where the complexity of the spectrum would probably be more compositionally interesting than precise pitch control. Using these patches the musician should be aware of density and texture of the resulting spectra. The density of the resulting "klangs"[4] refers to the number of sidebands present in the sound. General texture relates to the spacing of the sidebands. If the program is in the low audio range (18-30 Hz) the sidebands will be spaced around the carrier at the corresponding close distances. The higher the program the farther the sidebands will be from the carrier. Another effect which may be noticed is a spectrum settling. If the relationship between the carrier and program frequencies is constantly changing there may be a gliding effect from one spectrum to the next. This is caused by an AC coupling in the circuits and it can be quite beautiful if put to good use.

The important thing to keep in mind is that the index, whether the modulation is exponential or not, also determines the strength or loudness of the center frequency. As the index is increased more sidebands appear on each side of the carrier. These sidebands are positioned at intervals equal to the sum and difference between the program and carrier frequencies. As the number of sidebands increase with index, the more apparent power is put into the sidebands and consequently taken from the carrier. This means that the higher the index, the more sidebands and the *weaker* the center frequency. If the musical situation requires strong pitch centers, keep the index low. Even with maximum modulation index the articulating pitch controls from keyboards, sequencers, etc., will cause the entire spectrums to relocate in relation to each other, and a definite sense of vertical motion will be maintained.

Linear Frequency Modulation

In 1973 John Chowing published a now classic article, *"The Synthesis of Complex Audio Spectra by Means of Frequency Modulation."*[5] The article described applications of *linear frequency modulation* to producing time varying harmonic timbres with a digital computer. The important contribution of Chowning's research was that it presented an entirely new category of electronically generated timbres and stimulated other significant research into timbral control which essentially ignores classic filtering and waveshaping techniques. At the present time there are

4. A "klang" is generally understood to be a non-harmonic sound.

5. *Journal of the Audio Engineering Society*, vol. 21, pp. 526-534 (Sept. 1973).

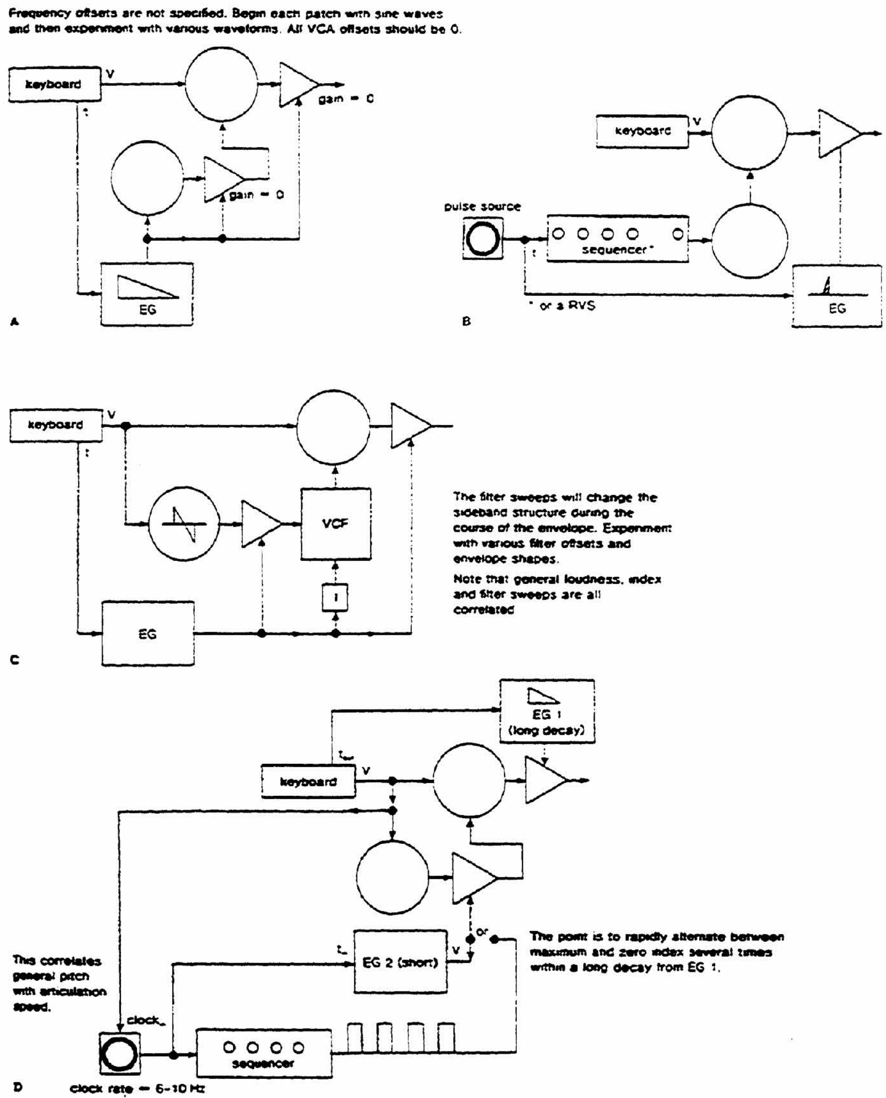

Figure 8.8. Exponential FM patches

at least five analog linear FM VCOs being manufactured for electronic music applications. Linear response of a VCO makes it possible to use frequency modulation as a timbral resource without causing a de-tuning of the center frequency.

As illustrated in figure 8.9, the program causes equal changes in *Hertz*, per volt, not equal changes in musical interval. If the index is adjusted to drive the carrier up 220 Hz, the negative swing of the program brings the carrier down 220 Hz, the same number of cycles per second but not the same musical interval. The result is that the carrier frequency remains the same, independent of index. The number and strength of sidebands is an FM spectrum is still determined by the index.

Figure 8.10 shows the first four sidebands of a 220 Hz program and a 440 Hz carrier. The placement of the sidebands is equal to the Hertz difference between the program and carrier, so that we see new pitches appearing every 220 Hz above and below the center

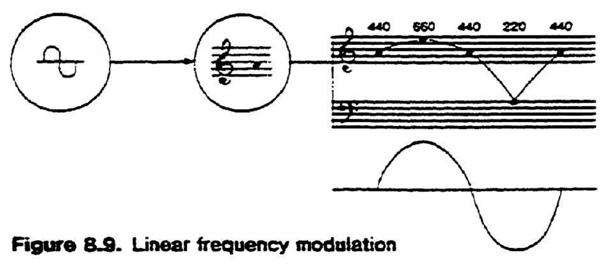

Figure 8.9. Linear frequency modulation

carrier frequency. Note that in this case the second lower sideband's frequency is zero and subsequent numbers are *negative*. The existence of a frequency in negative time is not a concept out of an Isaac Asimov novel but merely a reflection of that same frequency 180° out-of-phase with its complementary component. The negative A-440 is 180° out-of-phase with the original carrier, a positive A-440. The negative E-660 is likewise 180° out-of-phase with the first upper sideband, a positive E-660. If these sidebands were of

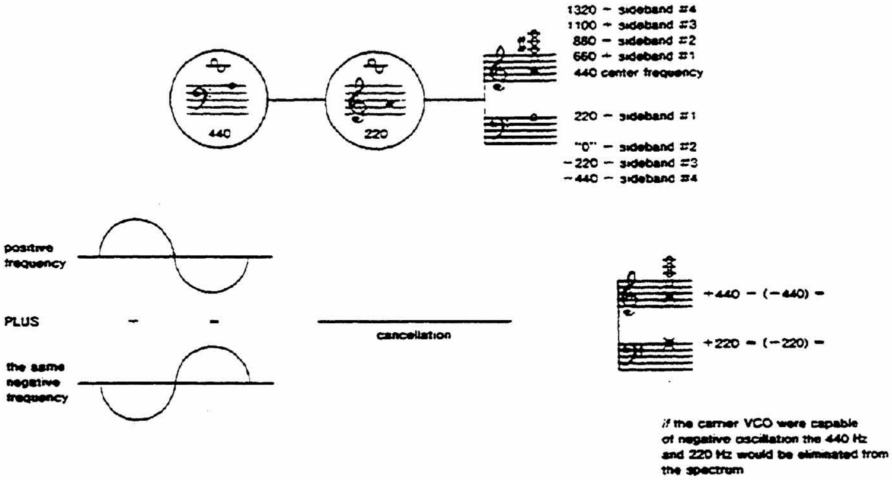

Figure 8.10. Linear FM sidebands

the same amplitude they would completely phase cancel, resulting in their elimination from the spectrum. Unfortunately, it is not quite that simple. As the various sidebands are produced on each side of the carrier their relative amplitudes vary in relationship to the index. This results in varying amounts of cancellation, and consequently a non-linear evolution of timbre. The calculation and amplification of the precise spectral components produced by linear FM can be accomplished by means of a Bessel function related formula. This involves a rather lengthy calculation in which the variables are usually impractical for analog electronic music instruments.[6]

It is only really important for the reader to realize that a harmonically related carrier and program yield harmonically related sidebands whose amplitudes are determined by the modulation index. The various "timbral" VCOs may use direct FM techniques or may employ internal waveshaping processes which simulate FM related timbres.

Linear Frequency Modulation Patches

Direct linear FM signal inputs give the musician the option of using any harmonically or non-harmonically related program frequency. If you have access to a linear VCO configure the patch illustrated in figure 8.11 and use the suggested carrier-program relationships. In this instrument the timbre will evolve in direct proportion to the loudness, as both index and

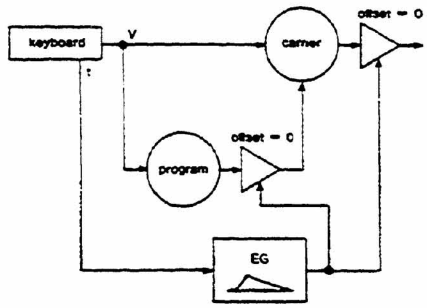

program pitch	*carrier pitch*
middle C	middle C
C an octave below	middle C
G a twelfth below	middle C
C 2 octaves below	middle C

Figure 8.11. FM timbral evolution correlated with loudness

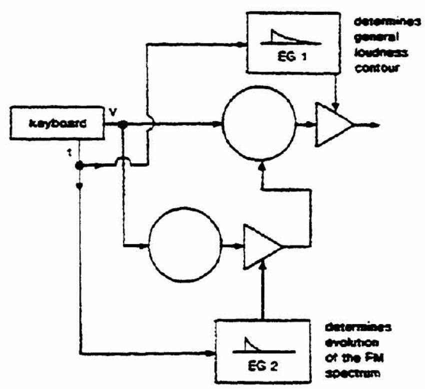

Figure 8.12. Independent FM index

the VCA are controlled by the same voltage. Figure 8.12 illustrates a method of independent timbre control. The index has its own function generator in figure 8.12 and it may be replaced by a sequencer, LFO, sequencer, random voltage source, or any other function generator. The use of linear FM for the production of harmonic spectra requires precise tracking of the carrier and program oscillators. Synching them to VCOs will minimize this problem and should guarantee the necessary phasing relationships. It would probably be best to use "weak" sync so that waveshape distortions are not introduced.

6. The interested reader should refer to Hutchins, *Op. Cit.*, pp. 2c9-2c12 or Hubert Howe's *Electronic Music Synthesis*, W.W. Norton, N.Y., 1975, pp. 14-15. It must be clarified that linear FM capabilities do not always imply the possibility of negative sidebands. Some linear FM oscillators will generate the negative frequencies and some will not, depending on design. While this negative oscillation give the characteristic timbral richness to the sound, linear FM without the possibility of negative oscillation can still provide a wide range of new timbres.

Several current design VCO's have internal linear FM. Some of these designs have, or at least replicate, negative sideband generation. Either refer to the users manual or use your ear to determine the process. These oscillators are commonly referred to "timbral VCO's." The actual timbre process may be true linear FM (with or without negative oscillation capabilities), or it may be an internal waveshaping technique which generally replicates a linear FM spectrum.

Audio Rate Amplitude Modulation

Amplitude Modulation Parameters

Amplitude Modulation with audio frequency programs can be done with VCAs, multipliers, or balanced modulators. The only other requirement is that the circuits be able to accept audio frequency voltages. As is the case with sub-audio 'AM' the process involves the gain of one signal (the VCA's offset of 0 to 1) multiplied by the gain of another signal. If this is done at an audio rate the resulting sound may be a complex harmonic or non-harmonic spectrum. Like FM, the spectrum depends on two parameters: the original spectrum of the program and carrier signals, and the modulation index, which is often described in terms of "percent modulation." In order to demonstrate index or "percent modulation" make one of the patches in figure 8.13. Figure 8.13A should be used if you have a VCA capable of audio rate modulation. The amp should be set for linear control if you have a choice. If your VCAs will not accept audio controls use a Balanced Modulator, as in figure 8.13B. This is a more complex patch but will do the job. With a Balanced Modulator the math is not quite the same but it will make the point. In each case the patch should replicate the model in figure 8.13A: a carrier signal which can be offset to any gain and a program signal which can be offset to any gain via an external VCA or processing pot. Even though the signal from a VCO is being amplitude modulated, it is being accomplished by a VCA and the AM parameters (except for initial waveshape) are determined by the VCA.

On the Buchla 100 Series instruments audio AM is built into the squarewave VCO. If this is your only resource, assume that the carrier gain will always be 1 and the program will always modulate the gain downward between 1 and 0. The strength of the two sidebands depends on modulation index, which in the case of AM is the amount of amplitude change in the carrier signal caused by the program signal or:

$$\text{Index} = \frac{\text{rise or fall above the unmodulated carrier level}}{\text{carrier amplitude}}$$

The more the amplitude of the carrier is changed, the stronger the sidebands. Thus the index has two variables; the offset gain of the VCA and the attenuation

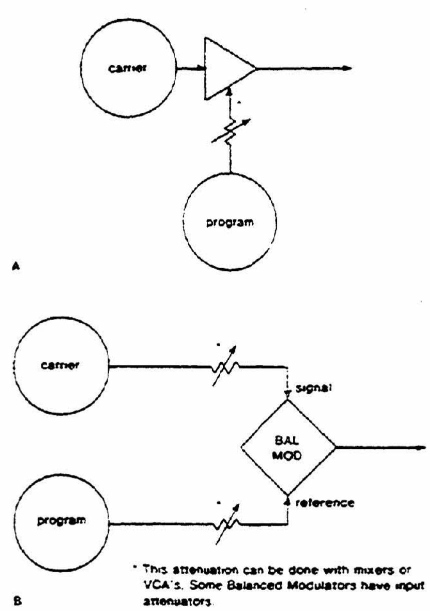

Figure 8.13. Audio-rate amplitude modulation

level of the program signal. With VCOs with internal AM, the gain offset is always at full value and the modulation is always a process of gain variation subtraction. In other words, a signal at maximum gain cannot get any louder because the positive portion of the program cannot cause any further amplification. In this case the amplification will only decrease in response to the negative portion of the program signal. By the same token if a VCA is offset to zero the negative portion of a program signal cannot make the carrier any softer and it will only respond to positive swings in the program signal. If a VCA is offset at about .5 on a scale from 0 to 1 a bi-polar program will effect a positive and negative modulation in response to its positive and negative voltage swing. If the program is a positive value only (see page 104) the modulation will only be in terms of a gain increase. Figure 8.14 illustrates several examples of AM parameters and their respective modulation indices. If the modulation tends to change the gain of a signal beyond the gain limit of the instrument it will probably cause modulation distortion or "over-modulation" which sounds like the addition of extra frequencies to the modulation product.

If your instrument does not have a VCA which accommodates audio rate AM it will probably have a Balanced Modulator. The techniques of balanced modulation are explained later in the chapter, but the circuit can be used for AM by setting the modulation control for AM. The modulation controls on balance modulators have a variety of formats, so that it is best to consult the instrument manual to successfully implement this technique (see page 124).

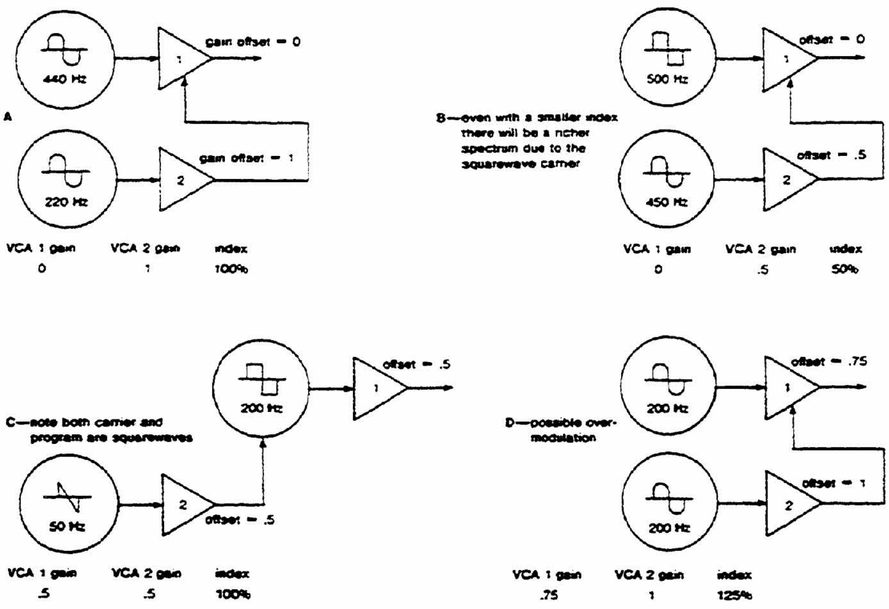

Figure 8.14. AM parameters

AM and FM Compared

Audio AM and FM are often used in the musician's instrument rather arbitrarily, after all, modulation is modulation! This is not the case at all, as each has a different effect on timbral control. AM will produce only two sidebands for each frequency component present in the carrier or program. If both are sine-waves there will be only one sum and one difference tone. The strength of these two sidebands is determined by the index. The only time extra distortions should appear is if the carrier is over-modulated. A significant characteristic of AM is that the carrier signal will always be present in the spectrum, irrespective of the index. To the musician this means that the AM spectrum will always have a strong pitch center, in spite of any non-harmonic spectrum. The following comparison chart summarizes the differences between AM & FM, and should be considered in term of the type of effect you are attempting to construct.

Parameter	*Frequency Modulation*	*Amplitude Modulation*
Index =	$\dfrac{\text{Peak frequency deviation of the carrier}}{\text{Frequency of the program}}$	$\dfrac{\text{Change in the amplitude of the modulated carrier}}{\text{Amplitude of the unmodulated carrier}}$
Spectrum-sidebands	For each frequency component in the program or carrier a potential sideband is generated on either side of the carrier. The number and strength of the sidebands is dependent on index.	For each component in the program or carrier only one sideband will be generated on each side of the carrier, their loudness determined by index. Beyond an index of 1 the state of over-modulation will cause extra distortions in the spectrum.
Carrier	will gradually disappear as index is increased. Exponential FM results in carrier shift, linear FM does not.	will always be present (with normal two quadrant multipliers VCAs).
Character	FM can produce negative frequencies which reflect above zero 180° out-of-phase to effect the spectrum.	AM will not produce negative numbers. Any modulation product below 0 will be ignored.
	Either linear FM or AM can result in harmonic or non-harmonic spectra, depending on the ratio between carrier and program frequencies.	

AM Spectrum Control

Since AM does not introduce any center pitch displacement it can be used as a powerful timbral resource, especially if the index is dynamic. If your instrument does not have a direct voltage controlled index, configure the patch in figure 8.15. The index value is now controlled by the function generator controlling VCA "P." As an initial experiment, offset VCA to about .5 and manually change the gain on VCA "C." As the program gain is raised the sidebands will be introduced into the spectrum. Now try some discrete tuning. Check to make certain that both VCOs are tracking in parallel, and tune them to the various intervals indicated. Note that with these non-harmonic relationships the resulting sidebands are also non-harmonic to each other and to the carrier. Even though this is a non-harmonic timbre, the spectrum will be consistent if the two VCOs track at the established interval. Due to the existence of the carrier pitch all the events will have a strong sense of pitch center with some non-harmonic coloring. The degree of this coloration is determined by the index. Set the program VCA offset to zero so it will only let the signal through in proportion to the magnitude of the envelope generator. If the EG has a sharp attack and long decay, the carrier frequency will begin with a high modulation index, and the index will decrease as the control envelope decays. You will hear the attack of the pitch with its sidebands at full strength, and the sidebands will fade out in proportion to the envelope decay.

An expansion of this patch is to control both modulation index and gain of the total event with the same EG as illustrated in figure 8.16A. The effect here is that as the tone becomes more pure the whole event becomes softer. The final un-modulated pitch will never be heard because the index reaches zero at the same time the total gain reaches zero. If you wish the unmodulated pitch to be heard before the sound decays there are at least two solutions. One is to lower the index so that it gets close enough to zero to be ineffective before the sound decays. The other solution is to use a different EG for each function as in figure 8.16B. This is the recommended approach, since the index and gain can have completely different shapes. Figure 8.16C is an alternate version of 8.16B if your VCA has control voltage summing inputs.

The power of AM as a timbral resource becomes more apparent if the program and carrier are in a harmonic relationship to each other. Explorations of this technique can be greatly facilitated by thinking of harmonic intervals in terms of ratios as they appear in that natural overtone series. This is demonstrated in figure 8.17. Simply locate the interval you wish

Tune:	VCO 1	VCO 2
	C	unison C
	C	1 octave lower
	C	1 octave higher
	C	perfect 5th lower
	C	minor 7th higher
	C	a small ½ step higher

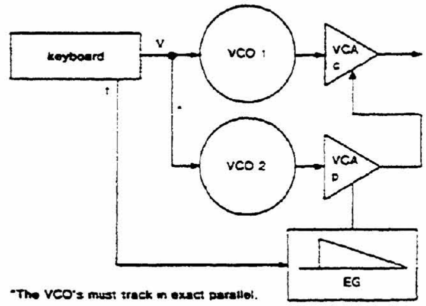

*The VCO's must track in exact parallel.

Figure 8.15.
AM spectral control

to work with and note the corresponding harmonic numbers: a unison is a 1/1 (C/C); an octave is a 2/1 (C/C), a fifth is a 3/2 (G/C), a major sixth is a 5/3 (G/E) etc. If the VCOs are tuned and track at set harmonic ratios, the resulting sidebands are simple sums and differences of the numbers in the ratio, including the original carrier pitch.

As shown in figure 8.18 if the VCOs are tuned to a unison, 1/1, the sidebands are the octave, a 2, and the lower sideband is zero ($1+1=2$, $1-1=0$). If the VCOs are tuned to a perfect fifth, 3/2, the sidebands are at the 5th harmonic (the major third) and the fundamental of the AM spectrum. If you think in terms of simple ratios the calculations are the same for any pitch references and the mathematics is simple enough to do in your head in real-time performances. Tune these various ratios, making sure the VCOs track, and experiment with various index envelope shapes. The following patches suggest some basic points of departure for the exploration of harmonic dynamic AM. These configurations are equally useful with non-harmonic AM. Keep in mind the use of a balanced modulator if your VCA's do not accept audio-rate controls.

Figure 8.19 uses a sequencer to store carrier, program, and index information. Bank A determines carrier pitch, bank B determines program pitch, and bank C determines index. Since each parameter is controlled with its own voltage there need not be any fixed correlations involved. Note also that the index is not dynamic within an event. It is set by a non-fluctuating voltage so that each event will have a static spectrum. The patch can be expanded in many ways. The spectrum could be made dynamic by integrating the voltage output of bank C or by substituting another envelope generator for index control. Some parametric correlations could be explored by using the bank A carrier control voltage to determine also the

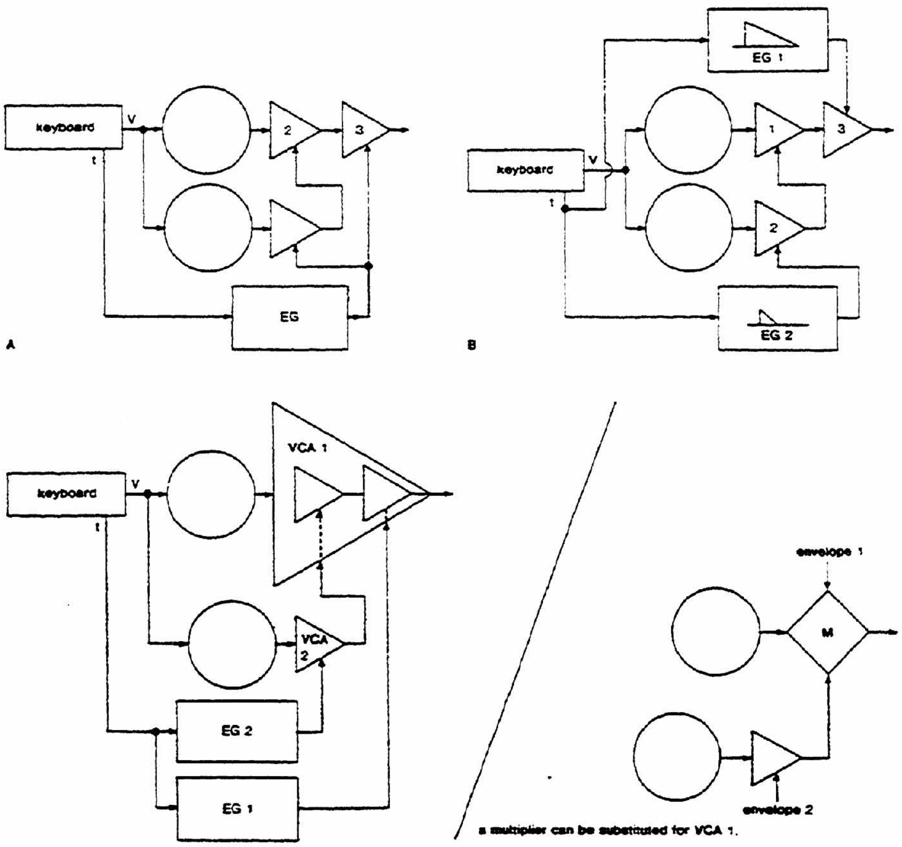

C—Some designs will have control voltage inputs designed so that the two control envelopes can be applied to a single VCA. If this is the case VCA 3 can be eliminated. Check your manual!

Figure 8.16. Dynamic index AM patches

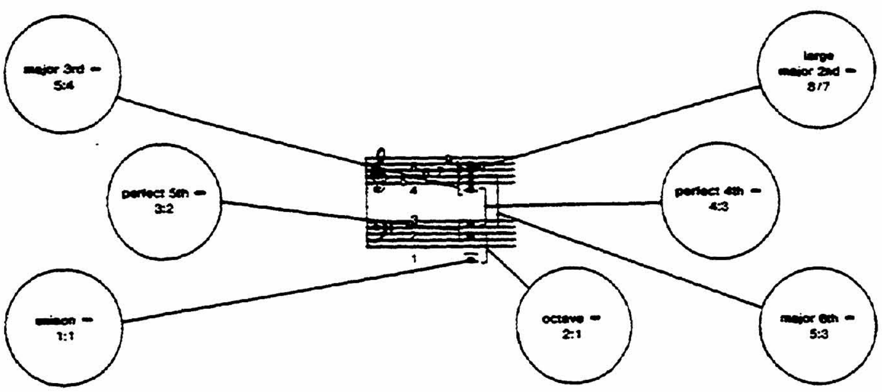

Figure 8.17. Interval ratio identification

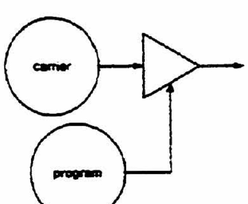

program VCO	carrier VCO	ratio	sidebands
C	C	1/1	2 (octave) 0
G	C	3/2	5 (2 octaves and a Maj. 3rd) 1 lower octave
C'	C	2/1	3 (twelfth) 1 unison
C	E	5/4	9 (3 octaves and a Maj. 2nd) 1 two octaves lower

Figure 8.18. AM sideband calculation

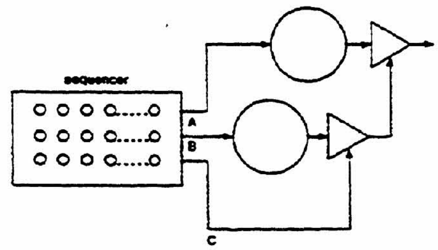

Figure 8.19. Sequencer storage of carrier and program pitch and index

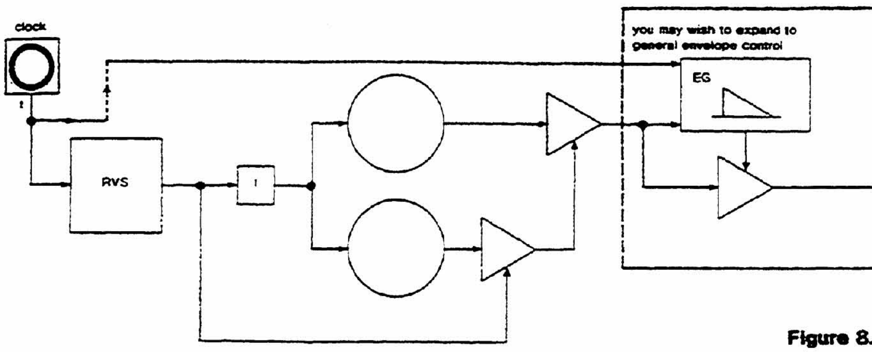

Figure 8.20. AM instrument using inverted random control

clock speed or period. In this manner there would be a direct relationship between pitch and duration.

The patch in figure 8.20 uses an inverse random relationship. A stepped RVS is used to determine index and simultaneously inverted to generate parallel carrier and program frequencies. With this configuration the lower pitches will have stronger sidebands.

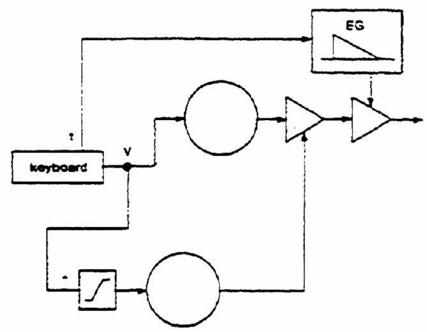

*Use and integrator or a parallel keyboard portamento voltage

Figure 8.21. AM with integrated program control

The instrument illustrated in figure 8.21 produces a unique sound. The index is non-dynamic and the VCOs are tuned at some harmonic relationship. The pitch voltages, in this case from a keyboard, are taken directly to the carrier. The same voltage is processed through an integrator before being applied to the program VCO. Each time a new pitch is selected the carrier will instantly respond but the program will glissando into the new pitch, creating a evolutionary non-harmonic spectrum until it reaches the new harmonically related pitch. This patch is especially suited to keyboards with parallel portamento and direct voltage outputs. If the keyboard is replaced by some other function generator such as a sequencer, take care that the integration time is not longer than the clock or timing pulse period, or the correct pitch relationships will never be reached.

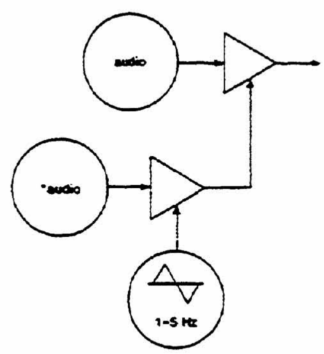

*This might be most interesting if the tuning is non-harmonic

Figure 8.22. Double AM—audio and sub-audio programs

Figure 8.22 illustrates a technique of double modulation. The index is dynamic and controlled by a sub-audio waveshape; any waveshape will work but try a sawtooth first. The modulation index is itself modulated by the LFO creating a pulsing spectral vibrato. This effect can be carefully tuned if the clamping VCO is used for the program frequency.

The instrument illustrated in figure 8.23 sounds similar to strong phase locking (see page 109) but is accomplished in an entirely different manner. A sequencer is used to supply the pitch logic to the program VCO. A keyboard or any other suitable controller tracks the carrier and program VCO in unison. The sequencer adds further pitch control to the program VCO. Tune the sequencer so that each increment produces a harmonic pitch relationship with the carrier. As an example, increment 1 sets the two VCOs at a unison, increment 2 sets them at an octave, increment 3 produces a relationship of a perfect twelfth, and 4 re-establishes the octave. As the sequencer switches from increment to increment the harmonic modulation spectra changes. At the same time the keyboard is determining the pitches of this cycling timbre set. A stepped timbral evolution can be implemented by starting the sequencer clock with a keyboard pulse. The last programmed stage of the sequencer sends out a pulse to stop the clock. In this manner each pitch selection will begin on the first increment of the sequencer (if the sequencer is running fast enough to clock through all the increments during the articulation of each pitch; for this reason you many wish to voltage control the clock speed with another dynamic voltage such as finger pressure or a joystick). Alternatives to the patch might be to use an EG output pulse

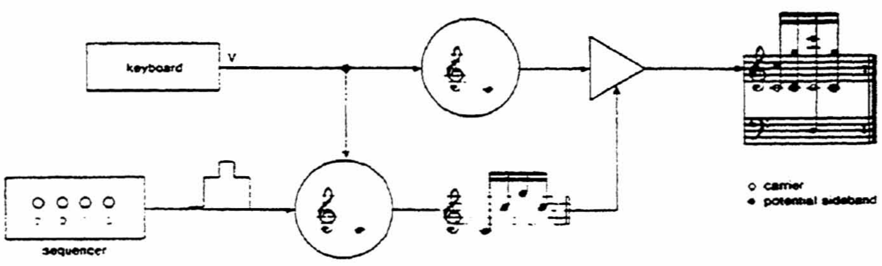

Figure 8.23. Timbral AM sequences

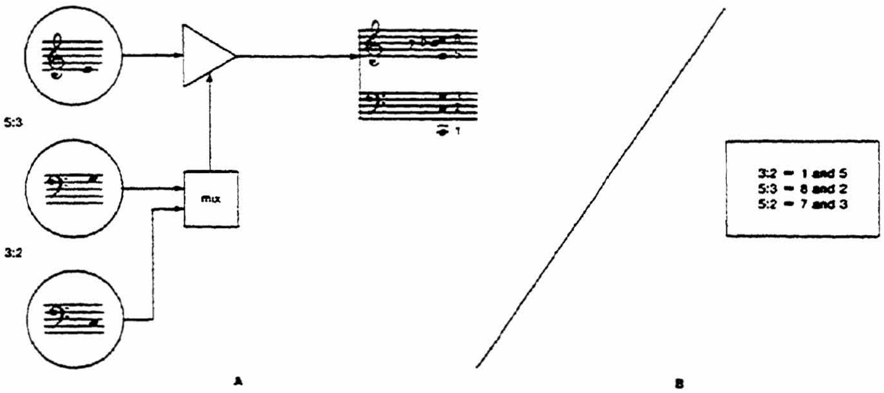

Figure 8.24. Multiple amplitude modulation

(if available) for the clock's stop command, or to use the keyboard pulse for a reset command. This instrument can be readily combined with the patch in figure 8.21 to produce a non-harmonic glissando into each new timbre.

The use of two program signals can be approached two ways, each with a slightly different result. *Multiple AM* involves the mixing of two program frequencies as illustrated in figure 8.24. The phase relationships between the mixed signals can cancel and/or reinforce each other and the composite waveform may have a slightly different gain characteristic. At the same time the AM spectrum will contain the sum and differences of the two program signals. Figure 8.24B illustrates this process. In this case the two program signals and the carrier are related according to the ratios 5:3:2. The resulting spectrum contains a dense set of harmonics up to harmonic number nine.

Double AM involves series multiplication as illustrated in figure 8.25. What will be the program amplitude is first multiplied (amplitude modulated) by another sub-program. Assuming full index, the 3:2 ratio between the two frequencies produces a spectrum of pitches related 5:2:1. This entire spectrum is then used as the program to amplitude modulate the carrier. The resulting spectrum is a complex harmonic structure ranging up to the eleventh harmonic. Since some of the components are duplicated in the spectrum, the phase relationships of the programs and carrier can result in amplification or attenuation of certain frequencies. Due to the complexities of the spectrum such an effect would probably be insignificant. If it causes audible problems, phase lock the oscillators. This instrument can produce even more shimmering timbres if the various indices are voltage controlled.

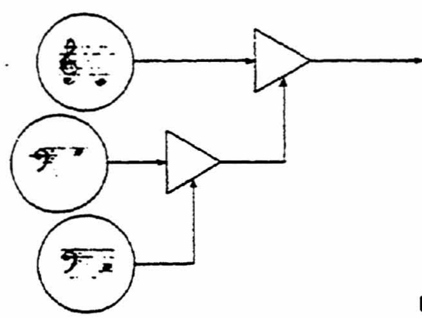

Figure 8.25. Double AM

All of the previous instruments were based on the use of sinewave frequencies so that basic concepts could be discussed with a minimum of mathematics. These techniques will work for any waveshape, but (in terms of timbre calculations) unless you depend on your ear, the addition and subtraction can become quite involved. The fact to consider is that each additional part of the program or carrier signal's spectrum will result in an additional set of sidebands. Consider a case in which two square waves are used. Even if we calculate the resulting AM spectrum using just the first 5 partials of each signal, it would result in 20 sidebands. At this point I suggest you throw away the pencil and experiment until it sounds good to you. I am not suggesting that only sinewaves are usable for modulation,—merely being honest about avoiding the mathematics! Rich waveforms can be used in very artistic manners to brighten any modulation spectrum.

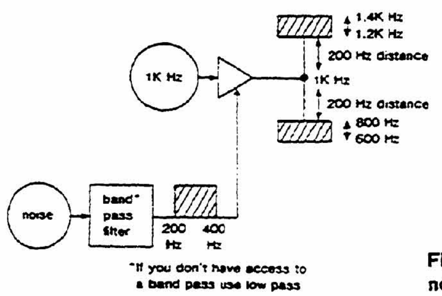

Figure 8.26. Selected noise bands with AM

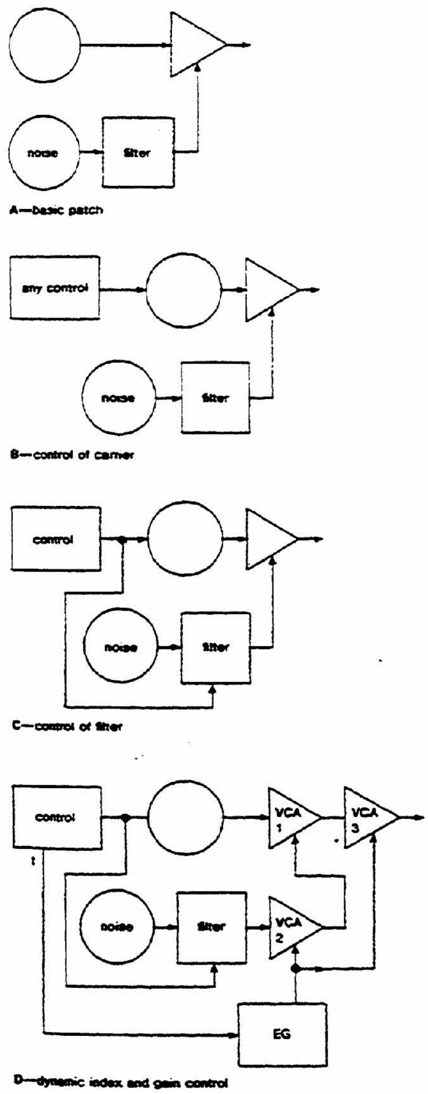

Figure 8.27. Evolution of AM noise patch

It would be of benefit to review chapter 3 and memorize the spectrum of each basic waveshape as well as the general amplitude relationships of the overtones. This will give you some idea of what to expect from each waveshape in the modulation process.

Amplitude modulation with filtered noise will produce some whistle and sliding sounds which have no acoustic analogy. The principles is not complicated. The bandwidth of the filtered noise is duplicated on each side of the carrier pitch. Figure 8.26 illustrates an approach in which white sound is patched to a bandpass filter. Hypothetically, let's limit the bandwidth to 1 octave, say between 200 and 400 Hz. The sum of this bandwidth and a 1K Hz carrier is noise spectrum from 1.2K to 1.4K Hz, and the difference is a noise spectrum from 600 to 800 Hz. The modulation spectrum will include these two noise bands and the original carrier. Note that the noise spectrums are placed on either side of the side band at a Hertz interval *equal* to the lowest frequency component of the filtered noise. These seemingly sharp edges are only hypothetical, as the filter slopes are not abrupt (see chapter 9, page 149). This gives a greater pitch center to colored noise than similar FM techniques, since only one set of sidebands is produced and the carrier pitch is exactly in the middle of the spectrum. Figure 8.27A also provides a suggestion for stepwise expansion of this instrument. Figure 8.27B suggests voltage control of the carrier (keyboard, S/H, sequencer, etc.); C adds voltage control of the filter's center frequency (perhaps correlated with carrier pitch), and D adds the possibility of a dynamic modulation index.

AM of Acoustic Sources

The musician might now consider AM of acoustic instruments. The principles are exactly the same, therefore rather than take up space and time repeating myself I will offer a few patches for consideration.

Figure 8.28—Basic patch for amplitude modulating an acoustic instrument. Appropriately pre-amplify the instrument and patch it to a VCA. Now the instrument sound is the same as any other carrier and can be modulated using the same techniques used with any VCO carrier.

Figure 8.29—The modulation index is determined by an EG or any other function generator. Since it requires a timing pulse, the pre-amp is patched in parallel to an envelope detector so that when the instrument plays the EG will produce the appropriate index control.

Figure 8.30. A basic AM patch is set up, but the index is controlled by another acoustic instrument. This can be structurally interesting since we then hear

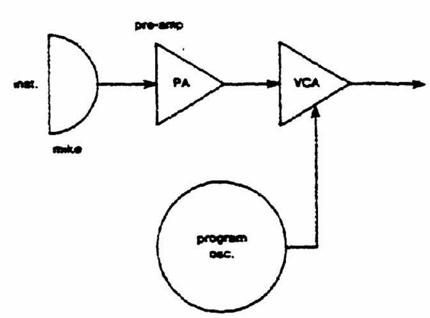

Figure 8.28. AM of external instruments

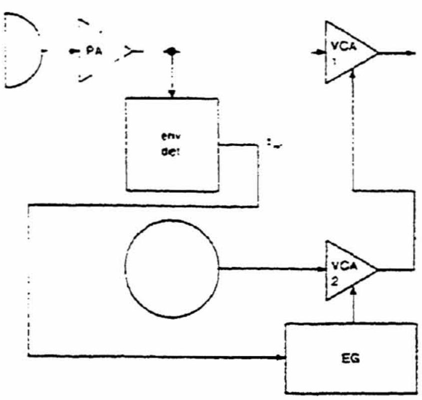

Figure 8.29. Envelope control of index

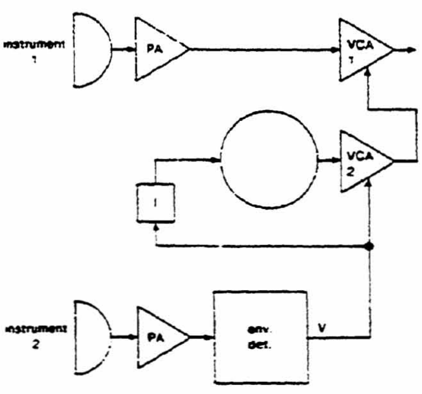

Figure 8.30. External modulation parameter controls

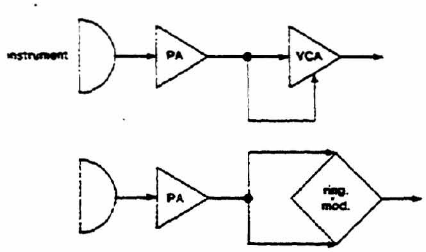

Figure 8.31. Auto-AM

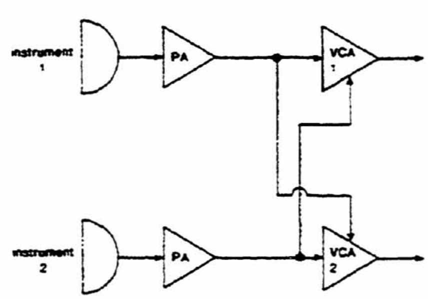

Figure 8.32. Cross modulation between two instruments

modulation characteristics of one instrument as a function of the articulations of another, perhaps unrelated, instrument.

Figure 8.31. One instrument is simultaneously the carrier and program. This will have interesting spectral results if the instrument generates a relatively simple waveform, like a flute. Academically this is the patch for octave doubling, but it only works effectively for sine waves. If you know the harmonic spectrum of the acoustic instrument you are working with you may be interested in calculating what happens when you multiply one instrument by itself!

Figure 8.32. An expansion of the previous patch in which one acoustic instrument modulates the other. If the VCA is offset to zero an "AND GATE" logic is created. There will be no sound unless both instruments are playing at the same time. This is the basis for Robert Ashley's *String Quartet Describing the Motions of Large Real Bodies* discussed in chapter 6 (page 92).

Balanced Modulation and Ring Modulation

The Balanced or Ring Modulator has always been an essential instrument in electronic music due to its capability of producing the desired interaction between the signals.[7] The process of balanced or ring modulation can be described as nothing more than a specialized case of amplitude modulation. The VCA, as explained on page 104, is a two quadrant multiplier which does not produce negative or inverted gain, and therefore the carrier is always present in the modulation spectrum. The balanced or ring modulator is a four quadrant multiplier, meaning that it will generate negative gain. The relevance this has to spectral control is that balanced modulation rejects the carrier signal from the modulation product as illustrated in figure 8.33. The result of balanced modulation is that non-harmonic spectra will not have a real pitch center. Timbres produced by two harmonically related signals will have at least a virtual pitch center because all of the sidebands are an integral multiple of some audio frequency. Even if that frequency is not present in the spectrum, the feeling of a "fundamental" will still exist.

The Balanced Modulator

All of the patches documented in the previous section on audio rate AM can be accommodated by simply substituting a balanced modulator for a VCA. At this point a distinction must be made between what is, in

7. Some practitioners still prefer the older diode ring circuits due to their characteristic distortion which adds a certain coloration to the sound.

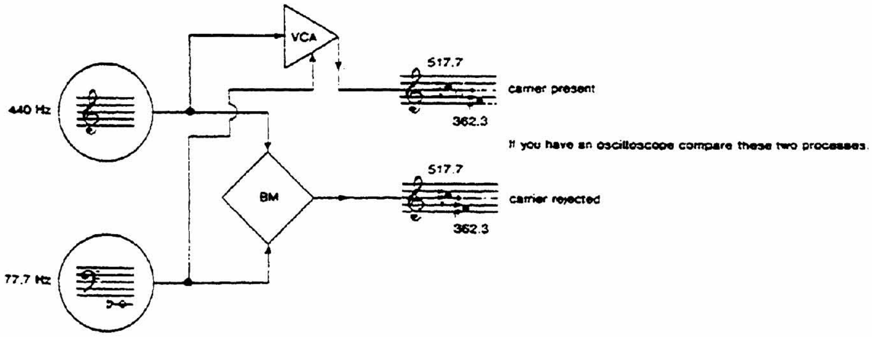

Figure 8.33. Balance modulation and amplitude modulation spectra

practice, called a "balanced modulator" and what is called a "ring modulator." Most balanced modulators designed for electronic music applications must have a manual and/or voltage controlled "modulation" index. If the modulator is designated as *completely* balanced, the term "index" is irrelevant, as index is always at maximum. As was discovered with AM, the index controls the magnitude of the sidebands. A completely balanced modulated signal (maximum carrier rejection) is commonly know as "ring modulation," and "index" has no meaning in this mode. Most balanced modulator circuits, however, can be varied from different degrees of an unbalanced state to a completely unbalanced state.

The PAIA 4710 Balanced Modulator (see figure 8.34A) allows the circuit to be used as a VCA (no carrier rejection) or a completely balanced modulator (about 50 db. carrier rejection). With the pot to the extreme counter-clockwise position, the carrier signal will be present in the output spectrum and the control inputs are the same as a CV input in any VCA. As the control is turned more to the right there will be proportionately more carrier suppression. In the full clockwise position there is maximum carrier suppression. In this fully balanced mode there will be no output signal until a program signal is applied. This, of course, is to be expected, because sums and differences require two input signals. With the modulation pot in the VCA position the "control" inputs determine the gain of the "audio" signal (the program), thus providing the musician with voltage controlled index. The control voltage is in effect turning up and down the modulation pot. To simulate true AM the voltage should be attenuated so as not to drive the circuit to a completely balanced mode. The degree of carrier rejection can be varied by turning the modulation pot to any desired point and the index will be controlled from that reference.

The balanced modulator section of the Buchla 285 Frequency Shifter/Balanced Modulator (see figure 8.34B) has a similar format, except that the modulation mode can be continually variable from no modu-

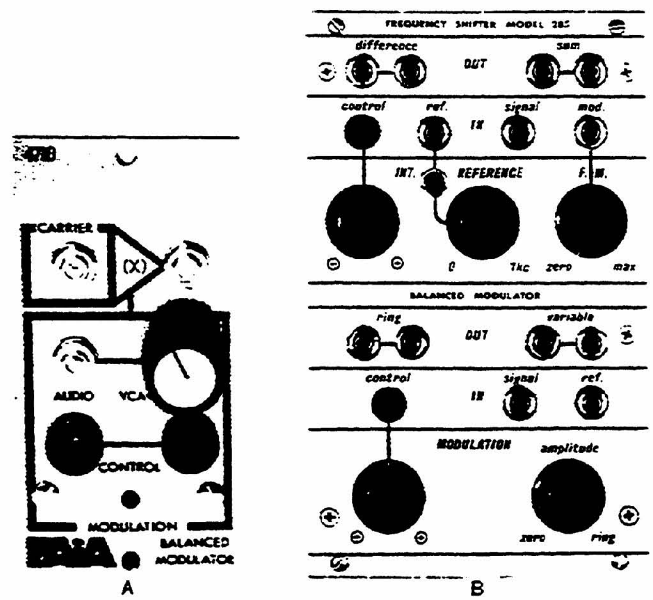

Figure 8.34. PAIA 4710 balanced modulator and Buchla Series 285 frequency shifter/balanced modulator (*Left*, photo used by permission.)

lation (zero) to full balanced (ring), as determined by the modulation pot. The incoming control voltage is processed either positively or negatively (inverse attenuation—see page 37) and summed with the voltage of the modulation pot. Besides providing the possibility of continuous voltage controlled transitions from unmodified to amplitude modulated and ring modulated signals, another set of signal outputs provide access to only ring modulated signals, independent of the modulation index. Therefore an instrument labeled "Balanced Modulator" will provide different degrees of carrier suppression. If this process is voltage controllable it may be used as a voltage controlled index audio rate amplitude modulator.

An instrument labeled strictly "ring modulator" usually will not have carrier rejection controls.[8] With com-

8. Some ring modulators have manual front panel "balance" controls which may be used to tune the circuit to accommodate different level signals. These controls do not offer the same range of flexibility as true voltage controlled carrier suppression.

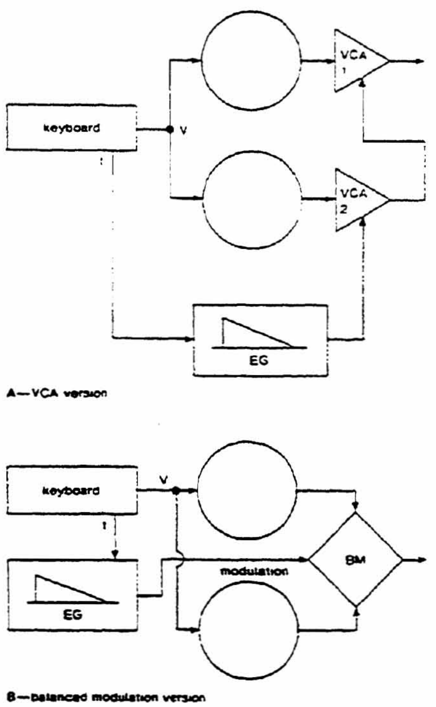

Figure 8.35. Spectral control with a balanced modulator

plete balanced modulation there is no need to distinguish between "carrier" and "program," and interchanging the inputs will not change the output spectrum. It has, however, been demonstrated that with voltage controlled modulation produces a continuum of carrier rejection, so that these terms will continue to be used. Various terms in current use for signal distortion are "signal" (carrier) and "audio" (PAIA), "signal" and "reference" (Buchla), "A" and "B" (ARP), X and Y, etc. Some practitioners refer to the "carrier" as the higher of the two signals, but this is often confusing because there is no reason that the program has to be a lower frequency. Whatever terms are used it is important to realize which input signal can be potentially transferred to the output spectrum by adjusting the modulator's balance. Due to the balanced modulator's capability of virtually total carrier rejection, it can completely transform timbre; thus most of the applications are in terms of processing acoustically originated signals such as voice, pianos, pre-recorded tapes, etc. But this instrument's range of applications should not be limited by common practice. Any of the audio rate AM patches can be expanded, and in most cases, made easier with balanced modulators. Figure 8.35A is a duplication of a dynamic index AM patch shown in figure 8.15 (page 119). Figure 8.35B is the same configuration using a balanced modulator. The two VCAs originally used to provide voltage controlled index are now replaced by a single balanced modulator. With this technique we have a wider range of possible timbres, as the EG voltage may be attenuated (either externally or by the modulation index pot on the modulator) to provide any degree of carrier suppression.

The Ring Modulator

A "Ring Modulator" is a completely balanced modulator. Some ring modulators have front panel balance controls or switches which allow the musician to adjust the circuit for maximum carrier and program rejection. The reason for this requires explanation, but once understood it can expand the range of timbral control significantly. As was discussed on page 99, some waveforms consist of only positive or negative voltage. This means that if a waveform like the Eu sawtooth has a magnitude of 0 to +5 volts, it actually contains a +2½ volt offset. Most ring modulators are "AC" coupled, meaning that it will re-locate that waveform symmetrically about zero volts so that it can generate the negative gain in the modulation process. (see figure 8.36A). If one of the inputs is DC coupled (by means of a balance pot or switch), the sawtooth wave applied to this input is left "unbalanced," with its 2½ volt offset interracting in the modulation process. This DC offset is essentially a frequency of zero Hz and it becomes a real number so far as the sum and difference process is concerned. Therefore, the 50 Hz sinewave plus zero adds a 50 Hz frequency component to the modulation spectrum (see figure 8.36B). If both modulation inputs were 0 to +5 volt "sawteeth," the spectrum would be further enriched by having all of both of the original frequencies appear in the modulation spectrum. AC/DC coupled ring modulators then

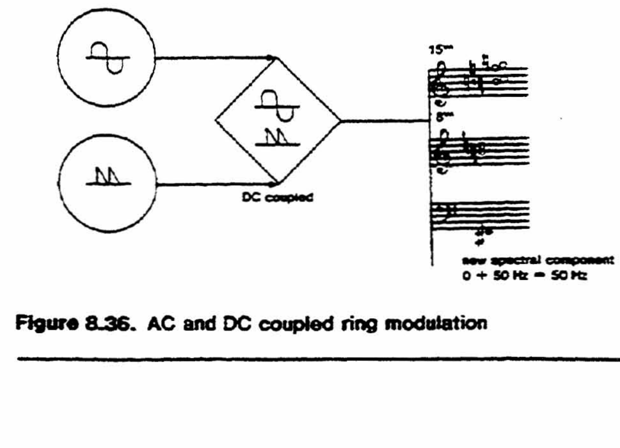

Figure 8.36. AC and DC coupled ring modulation

usually provide the possibility of "unbalancing" one or both of the inputs, allowing its original spectrum to become part of the final modulation product. DC coupling also allows a ring modulator to be used as a VCA by applying the control voltage to a DC coupled input.

Modulation of Acoustic Sources

The standard ring modulator is an AC coupled fully balanced circuit and therefore the following applications will be in terms of this design. The fact that there is maximum carrier rejection makes the ring modulator an ideal device for transformation of acoustic sounds. Figure 8.37 involves ring modulating a pre-amplified signal (voice, piano, saxophone, etc.) with an audio sine wave. The output spectrum will consist of the sum and difference of the sinewave frequency and *all* of the spectral components of the pre-amplified signal. It is recommended that all of these patches first be tried with sine waves so that the spectrum can be observed under the simplest conditions.

Using this patch play with various frequency ranges and all available acoustic resources. In the event that there are no sympathetic musicians available to help with your experiments, try using signals from radios, tape recorders, phonographs, etc. This also eliminates any acoustic interference, and the modulation products are clearly heard. Apply a steady oscillator frequency, then hold a sustained pitch on the acoustic instrument and manually turn the oscillator pot up and down. You will hear simultaneous upward and downward slides which are the respective upper and lower sidebands constantly changing positions.

With some ring modulators you may hear a leakage of one of the input signals through the circuit if the other input is not receiving a signal. In reference to the above patch you might hear the oscillator sinewave when the acoustic instrument is not playing. This means that the circuit is not completely balanced. This does not necessarily indicate an inferior instrument as this rejection is seldom more than 60 to 65 db and usually between 40 and 50 db on most instruments. Leakage is a characteristic which can either be compositionally accommodated (see the score to Behrman's *Player's With Circuits*, exercise 20, page 139), or it may be eliminated by a *squelch* patch. The "squelch" is an analog *AND* gate patch configured by patching the ring modulator output to a VCA offset at zero. The pre-amp for the acoustic instrument is simultaneously patched to an envelope follower so that a control voltage is produced proportional to the gain of the instrument's signal. Since the VCA is offset to zero the leakage from the ring modulator is not heard. As soon as the instrument plays, the ED's control voltage determines the gain of the VCA, making the signal audible. The added advantage of this patch is that the loudness of the ring modulation spectrum is directly controlled by the performer. This patch is illustrated in figure 8.38 and may be used whenever leakage becomes a problem. Some ring modulators such as the Bode instruments have a similar squelching option within the circuit, and may be switched in and out as needed.

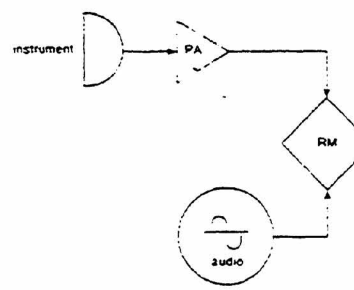

Figure 8.37. Ring modulation of acoustic instruments

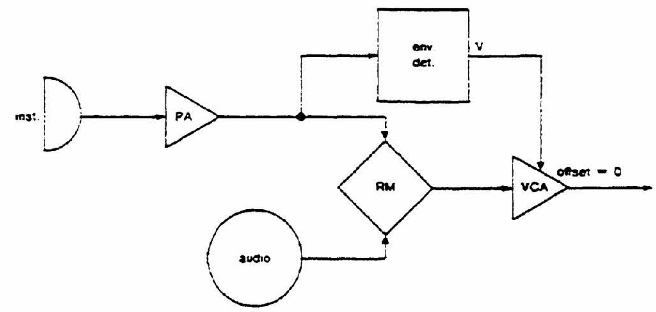

Figure 8.38 Modulator squelch patch

This series of patches illustrates a few of the many techniques used for processing one or more acoustic sound sources. These patches may be easily expanded by using any of the coordinated control techniques discussed in chapter 6. Once these patches have been explored, try further sub-audio AM or timbre modulation techniques on the ring modulated spectrum. It is also possible to apply any FM (audio or sub-audio) techniques to the VCO. Figure 8.39 correlates the frequency of the VCO with the dynamics of the acoustic input. A "forte" attack will drive the VCO up (or down) and its frequency will fall (or rise) with the decay of the acoustic instrument. This can be made more obvious by slewing or integrating the decay of the ED output. The use of a quantizer would change the glissandoing sidebands into discreet stepped spectra.

Figure 8.40 uses the pulse output of an ED to fire a sequencer which in turn determines the frequency of a VCO. In this manner pre-programmed timbres can be stepped through or addressed at will with various analog address techniques (see page 73). Substituting a random voltage source for the sequencer would produce pulse selected random timbres.

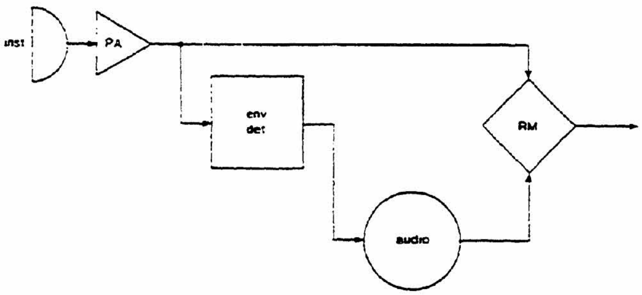

Figure 8.39. Correlation of instrument dynamics and program frequency

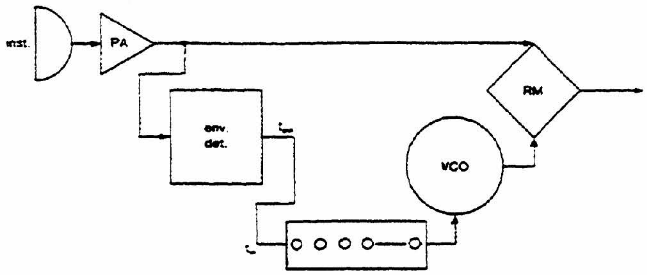

Figure 8.40. Program frequency storage

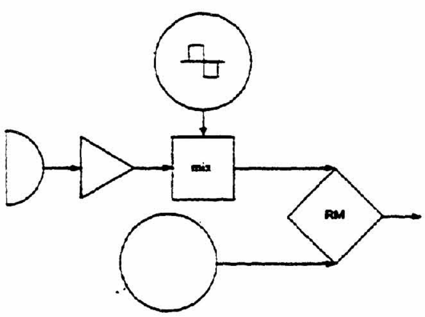

Figure 8.41. Multiple modulation

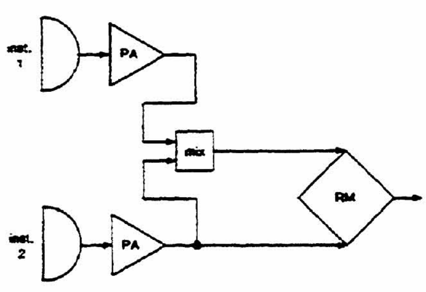

Figure 8.42. Combining two instruments in a ring modulation configuration

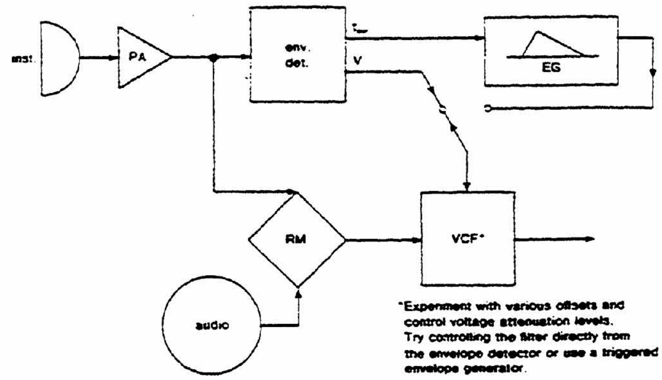

Figure 8.43. Filtering the modulation spectrum with correlated controls

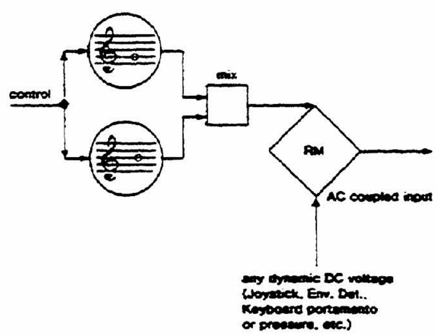

Figure 8.44. "Bowing" a ring modulator

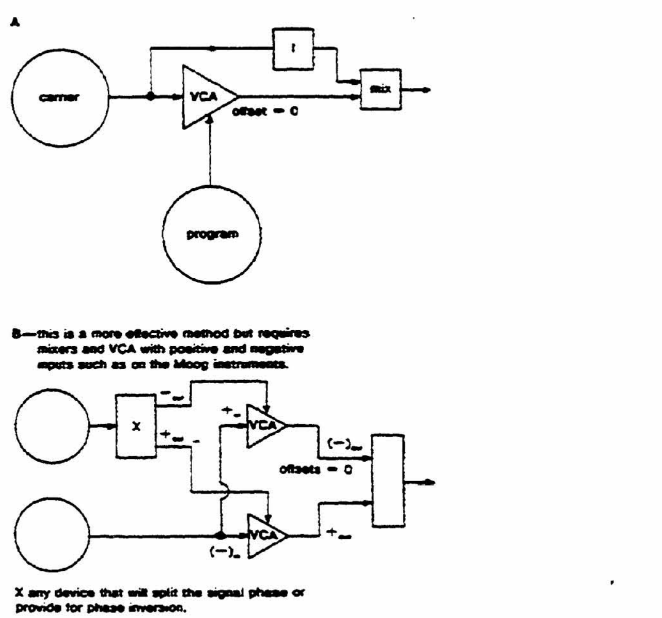

Figure 8.45. Ring modulation simulation

Figure 8.41 is a multiple modulation patch which forms the basis of Berhman's *Players With Circuits*. In this configuration one of the acoustic sources is mixed with a sub-audio waveshape (try a squarewave). This adds a rhythmic pulsing to the output spectrum. One possible expansion is to control the frequency of this LFO with an associated control, perhaps by an ED driven by one of the instruments.

In figure 8.42 one of the instruments is mixed with the other and the mix is applied to one input of the ring modulator. We know from previous experiments that a signal modulated with itself conceptually produces an octave. This really is true only for sine waves, as each of the overtones in a spectrum are not transformed by a 2:1 ratio, although they will still bear a harmonic relationship to each other. The result of doing this with acoustic instruments is a general clouding of the spectrum by modulating one source with itself and another simultaneous signal.

The patch in figure 8.43 can be used when the timbres get a bit out of hand. The spectrum can be limited by various types of filtering, either manually offset or voltage controlled. The filter control may be correlated with one instrument's dynamics via an ED or it may be programmed by any type of function generator triggered by the instrument.

The instrument in figure 8.44 is an intriguing patch referred as "the bowed ring modulator." This requires an AC coupled modulator and takes advantage of the fact that it will not react to the *level* of a DC control voltage but only to *changes in the level* of the control. Tune a couple of VCOs to a harmonic relationship and patch them both to a mixer. The reason for two VCOs is simply that it makes the sound more interesting. The mixer is patched to one side of the ring modulator. The other input is from some dynamic control voltage source such as a joystick, as illustrated, but it might be pressure from a keyboard, the output of an ED driven by a violin, a ribbon controller, etc. Each time the control voltage changes it will activate the output of the ring modulator. In this illustration one axis of a joystick "bows" the modulator and the other axis controls the pitches of the VCOs.

If your system does not have a dedicated balanced or ring modulator the effect may be replicated by using the patch shown in figure 8.45 A or B. Patch A uses a traditional AM patch but the carrier signal is eliminated from the modulation spectrum by phase cancellation. The carrier signal is taken in parallel to an inverter (a second VCA with negative outputs, an inverting mixer, etc.) and shifted 180°. It is then remixed with the modulation spectrum and with some careful tuning the carrier pitch can be completely phase cancelled to simulate ring modulation.

Frequency Shifters

Spectrum Shifting

Frequency shifters are not normally referred to as modulators, but the process is also a form of balanced modulation. The frequency shifter is exactly like a ring modulator except that the sum and difference tones are isolated from each other and independently available, usually from different outputs or by switch selection. The upper sideband is often referred to as the "up-shift," whereas the lower sideband is referred to as the "down-shift." Also known as a *Klangumwandler*, the frequency shifter can be put to best use if it is thought of as an *"additive* or *linear transposer."* A transposition of any chord or spectrum is a process of multiplying each component by a fixed number. A transposition of an octave (up) is multiplication of everything by 2. The transposition of the overtone spectrum up a fourth is multiplication by about 1.335. Figure 8.46A shows multiplication of part of the harmonic overtone series by 1.335, thus transposing all of its components upward an equal musical interval of a fourth. If the distance between the C and F is considered in Hertz terms, the fundamental has moved up 21.89 Hz. But if 21.89 Hz were added to every component in the spectrum the harmonic relationships would no longer be maintained, and this is exactly what a frequency shifter does: it shifts a signal by adding or subtracting fixed number of Hertz to or from every frequency component present in the signal's spectrum.[9]

Figure 8.47 illustrates a "C" fundamental harmonic spectrum shifted by different reference frequencies. Two features are significant in these examples; first,

9. In the case of frequency shifters, the terms "carrier" and "program" will not be used, as they do not adequately describe the process for the musician. Bode instruments use the terms "signal" and "carrier," the carrier being the frequency determining the amount of shift. This text will use the terms "signal," meaning the sound to be shifted, and "reference," meaning the signal determining the amount of shift.

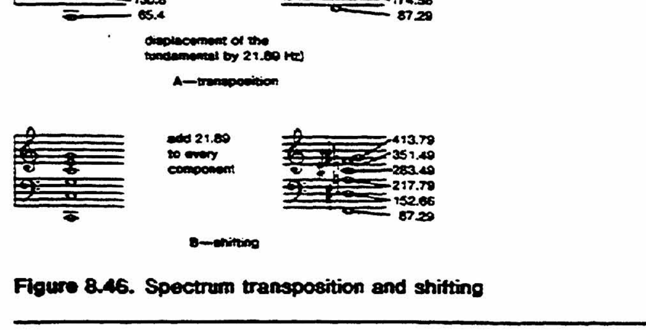

Figure 8.46. Spectrum transposition and shifting

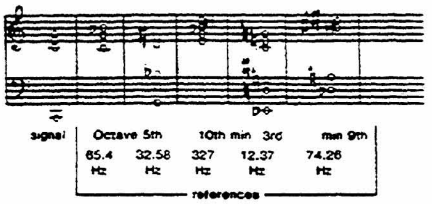

Figure 8.47. Resulting spectra from various frequency shifts

if the reference is harmonic with the original signal, the shifted spectrum will also be harmonic. Example C may be misleading but upon examination you will find that the spectrum shifted up a perfect fifth replicates the third, fifth, seventh, ninth, and eleventh harmonics of very low C (21.8 Hz). Although this fundamental is at the very lower limit of pitch perception the spectrum will still sound harmonic. If the reference is not a simple harmonic ratio with the signal the resulting spectrum will be a non-harmonic clang. The second point to note is that an up-shift compresses the spectrum. Likewise, if you calculated the spectra for down-shifts you would find that the frequency relationships would be expanded. The frequency shifter can then be used as a powerful instrument for transforming timbre in a very precise manner. These examples have all involved a single pitch with a simple harmonic spectrum. If multi-note chords are shifted keep in mind that each fundamental in the chord *and* the spectrum of each fundamental will be shifted, and the resulting shifted signals will be that much more complex.

Frequency Shifter Formats

Frequency shifters come in a variety of designs and formats. The Bode 735 (figure 8.48) is a sophisticated frequency shifter containing all the usual features of interest to the musician. Since all of these features may not be available on all frequency shifters the following discussion will suggest alternate ways of patching to obtain similar results.

A frequency shifter's *reference* or *amount of shift* is usually accomplished by an internal sinewave VCO. The oscillator may be manually offset or voltage controlled by any external control voltage. If the reference VCO has exponential response it can be driven in parallel with another exponential VCO. With this option you may use any other VCO on the instrument so that precise signal/reference ratios may be maintained. The use of electronic signals or acoustic sounds as a reference.

The advantage of most internal reference oscillators is that they are *quadrature VCOs*. This provides the possibility of *shifting a signal through zero*. With the internal quadrature VCO tuned to zero, an incoming AC control signal will shift the signal up an amount proportional to the positive swing of the voltage, their back through zero to a down-shift proportional to the magnitude of the negative swing of the control voltage. This is illustrated in figure 8.49, as two pitches tuned to a perfect fifth are shifted up and down a fixed internal above and below zero. The internal VCO is offset to zero Hz and an incoming sinewave is processed to modulate this VCO up and down a minor third. If we assume that the internal VCO is exponential, this means an upshift of 83.2 Hz and a downshift of 62.08 Hz. Note that after the upshift the spectrum passes through zero and continues to the downshift. This means that both the positive and negative shift will come from the same output on the instrument. If the internal reference VCO is linear the up and down shift would be the same number of Hz and the resulting spectral slide is notated in figure 8.50.

A popular effect is to shift a filtered noise band through zero and this patch is illustrated in figure 8.51A. Simply select a noise band via any available filter and apply it to the processing described in the previous patch.

The Bode 735 frequency shifter provides a mixture pot which gives the musician the possibilities of mixing the up-shift and the down-shift in any proportions. This may also be accomplished by taking both outputs to an external mixer (see figure 8.51B). If both signals are mixed in equal proportions the spectrum is exactly like that of a ring modulator, a spectrum containing both the sum and difference frequencies. By varying the proportions of the mix the

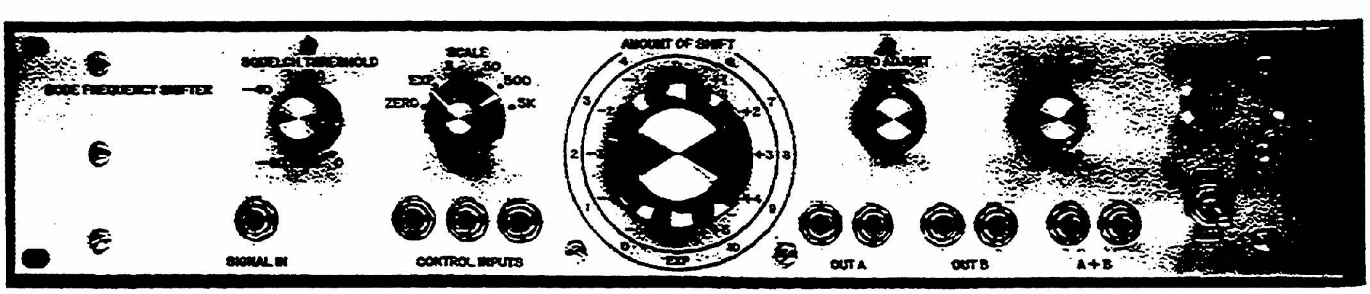

Figure 8.48. Bode 735 frequency shifter

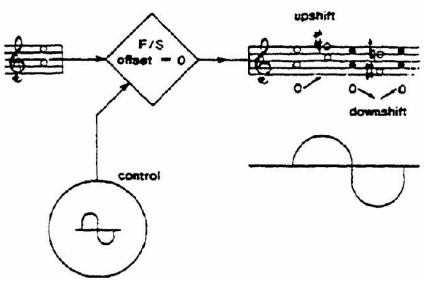

Figure 8.49. Exponential shifting through zero

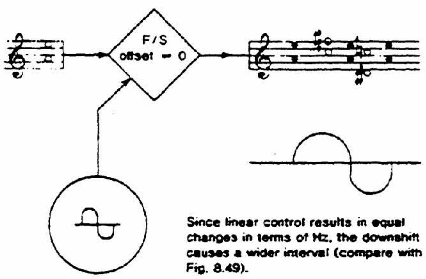

Figure 8.50. Linear shifting through zero

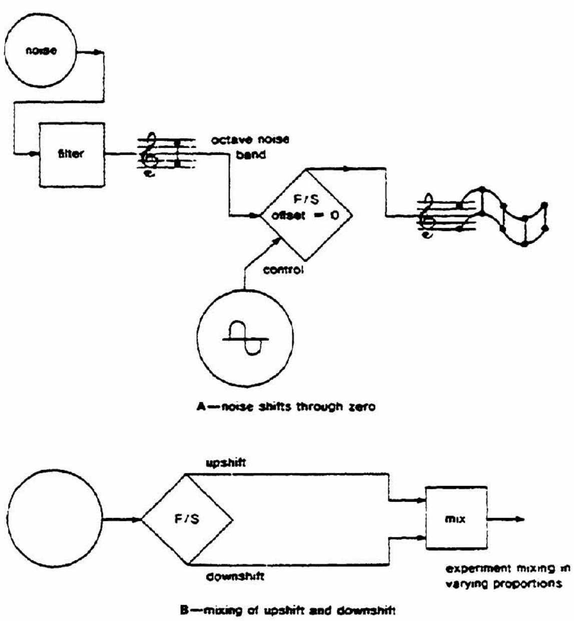

Figure 8.51. Frequency shifter patches

up-shift or down-shift can be given various degrees of prominance, thus providing even further coloring possibilities.

Like the ring modulator, a frequency shifter will probably have some minimal referency frequency leak if the signal output is not active. If the instrument does not have a squelch it may be patched up by replicating the patch in figure 8.38.

Applications

The following frequency shifter application suggestions were taken from an Audio Engineering Convention report given in 1972 by Harold Bode and Robert

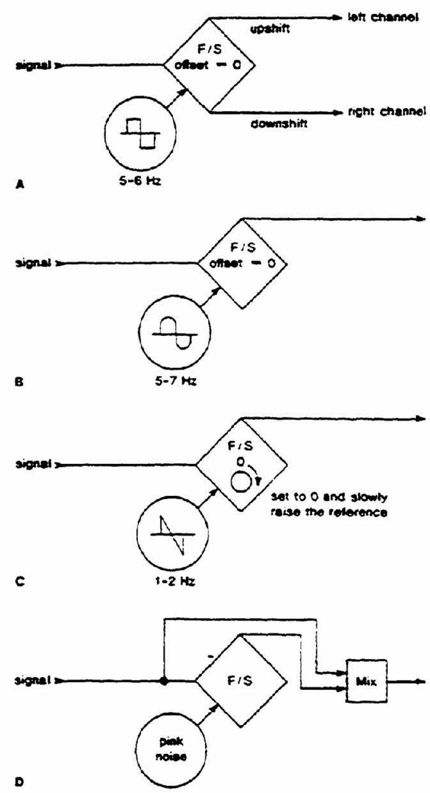

Figure 8.52. Frequency shifter programming with periodic and aperiodic voltage functions

Moog,[10] and from some application notes kindly provided by Harold Bode. In each case the original commentary has been preserved but the patches have been notated in a manner consistent with this text.

Programming with Periodic and Aperiodic Voltage Functions—Figure 8.52.

a. By setting the main tuning control to zero and applying a low-frequency square wave to the control voltage input in the linear mode, the up and down detuned outputs will switch places, resulting in a new stereo-type effect when heard over two stereo channels. The character of this effect is dependent upon the square-wave frequency typically, for instance, 5-6 Hz) and its amplitude. Entirely different effects are achieved when raising this frequency above 20 Hz. The amplitude of the square wave will determine the amount of detuning for both sidebands, which will become attractive when the detuning frequency is in some harmonic relationship to the fundamental of a simple program material.

10. Published in the *Audio Engineering Society Journal*, "A High-Accurate Frequency Shifter for Professional Audio Applications," Bode and Mood, July/August 1972, vol. 20, no. 6, p. 453.

b. By setting the main tuning control to zero beat and applying a vibrato-type sine wave to the control voltage input in the linear mode, a vibrato-type effect is created, displaying the widest frequency shift at low program frequencies, and decreasing toward higher frequencies.
c. With the main tuning control in the zero beat position, the application of a sawtooth wave to the control voltage input in the linear mode produces a dramatic effect when the sawtooth frequency is at about 1-2 Hz and when the main tuning knob is slowly turned out of its center position.
d. By setting the main tuning control to zero and applying a pink noise with limited voltage to the control voltage input in the linear mode, the program material assumes a hoarse quality which can be remixed with the original sound.

Multichannel Effects—Figure 8.53. A four-channel stereo effect can be achieved by feeding the direct program material to channel 1, the voltages of the output OUT_1 to (differences) channel 2, the voltages of the output OUT_2 (sums) to channel 3, and the ring modulator product to channel 4. In this instrument a sub-audio sine wave (1 Hz or lower) is used as the reference. This low of a shift will not be heard as a pitch change but rather as a slight vibrato with some phase shift. Each signal, the original, the sum, the difference, and the mixed "ring modulator" signal, will all have an opposing minute amplitude and phase shifts. When all four signals are put into an environment they create an interesting spatial effect. Note that if your instrument does not have a mixed output you may use an external mixer.

Detuning and glissandoing percussion—Figure 8.54. When the input signal is a quasi-pitched sound, such as that produced by a drum, the frequency shifter will alter the apparent pitch. In the case of a drum sound, varying the amount of frequency shift will appear to change the "size" of the drum. In conjunction with a envelope follower and envelope generator, a trigger occurring at the beginning of each drum sound may result in a rapidly varying "amount of shift" contour, which gives a whole new class of percussion sounds which glide or swoop each time they begin. A drummer may also use a pedal controller, or modulating oscillator, to vary the amount of shift, thus creating radical changes in the processed sound while he is playing.

A pitched sound which is rich in harmonics becomes clangorous when passed through the Frequency Shifter. When the Frequency Shifter is used with controlled oscillators, it is convenient to control the amount of shift and the frequency of the input signal with the same control voltage. This arrangement produces a clangorous sound whose relationships between overtones, and therefore its perceived timbre, remain constant as the pitch of the sound is varied. Furthermore, exciting new timbres are created when the oscillator tones are dynamically filtered before or after being shifted.

Simultaneous Shift and Reference FM—Figure 8.55. Using two sine oscillators, one fed to the signal input and the other to a control input, a wide range of frequency modulation is possible. If the amplitude of the control signal is dynamically varied, a class of clangorous tones is produced whose overtone strengths constantly vary with time.

Iteration Effects—Fig. 8.56.

a. The output of a tape three-head tape recorder may be mixed with its input to produce well known tape echo effects. If you are not yet familiar with tape echo you should wait until chapter 12 has been covered before you try this technique.[11] For those who are following so far here is what happens: a "basic patch, voice, instrument, etc., is

11. If you don't know how to do tape echo have the studio technician set it up for you or read chapter 12.

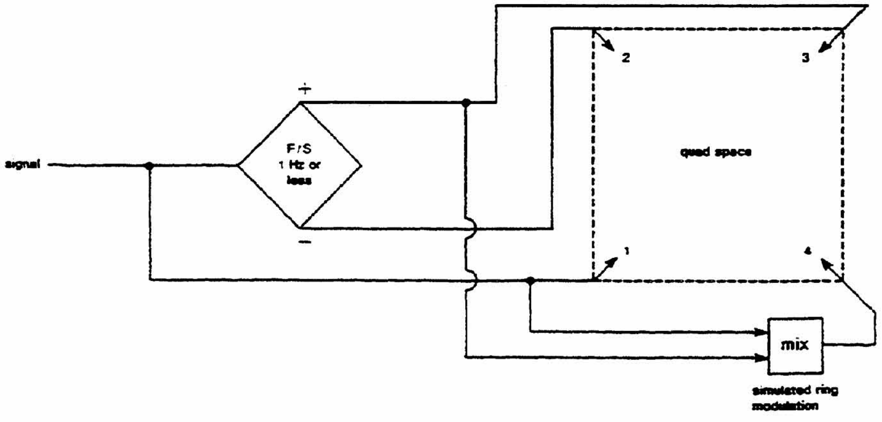

Figure 8.53. Multichannel effects

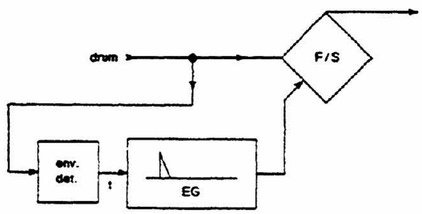

Figure 8.54. Detuning and glissandoing percussion

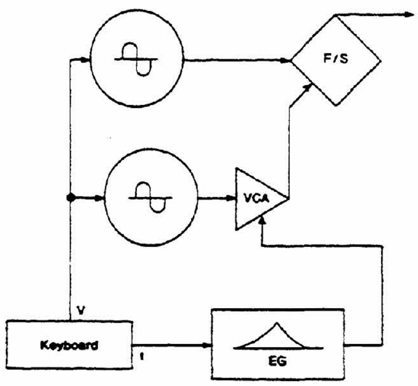

Figure 8.55. Dynamic control of klang spectra

patched to a mixer. The mixer is patched to a Frequency Shifter with a fixed reference. The Frequency Shifter output is taken in parallel to your output amp and the input of a three head tape recorder. Monitor the tape output in the "Output" mode so that there is a delay between the tape input and the output. The tape output (delayed by the distance between the record and playback head) is taken back to the input of the mixer. This delayed shifted signal is then put back into the Frequency Shifter, the original shifted signal is shifted again, delayed via the tape recorder, and back through the entire patch again, and again, and again. . . . This is a tricky configuration but can produce some amazing results if tuned correctly.

Audio Rate Modulation of Other Parameters

Most of the patches used for audio AM can be applied to audio rate modulation of any other signal processor, provided that it can accept audio frequency control voltages. The spectrum of the modulation product will depend on the relationship between the carrier frequency and the program frequency; if the relationship is harmonic the spectrum will be harmonic and if the relationship is non-harmonic the spectrum will be non-harmonic. The basic process of sum and difference in tone generation is common to most types of audio modulation.

Audio rate timbral modulation via filters, PWM, etc., still follow the basic process of sum and difference in tone generation. Precise calculation of sideband amplitude is complicated by the fact that there are changes in phase information. As stated by Bernie Hutchins, the analysis closely parallels phase modulation results and "the bookkeeping become excessive."[12] My own experience has shown me that the majority of music students share my own limitations and my ear is a far superior musical tool than my mathematics.

In figure 8.57 the signal being filtered is also modulating the cut-off frequency of a lowpass filter. Here the carrier/program relationship is 1:1, and this will result in an apparent emphasis of the cut-off frequency of the filter, very similar to a high Q. This is very effective with low audio range squarewaves as it is related to a filter "ringing" technique described in chapter 9, page 152. The program VCO may be set to harmonic relationships other than a 1:1 and the result will sound like a double Q filter—emphasis of more than one frequency in the spectrum. I have found this patch to be most striking if the program frequency is lower than the filtered carrier. The two VCOs may, of course, be tracked at non-harmonic intervals and

12. Hutchins, *op. cit.*, p. 2c(22).

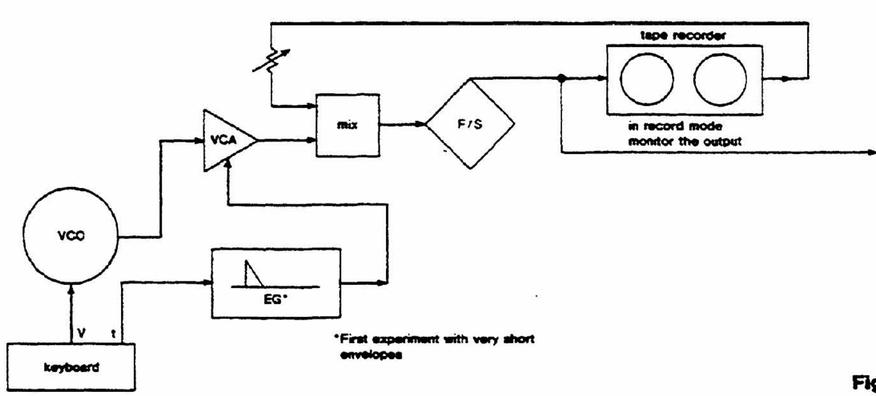

Figure 8.56. "Spiral echo" with a frequency shifter

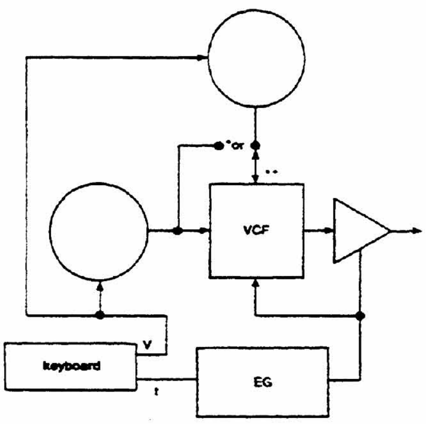

*The easiest way to get a 1:1 ratio is to use the same VCO for the program *and* carrier. Other ratios will require a second oscillator.

**If the filter does not have two summing control inputs the EG and program frequency will have to be mixed externally.

Figure 8.57. Audio rate filter modulation

the result is a non-harmonic "growl." Also experiment with various program and carrier waveforms.

A final modulation technique which may serve as food for thought is audio rate waveshape "time sampling." This patch is difficult to place in any of the previous categories but can be best thought of as waveshaping technique. The instrument illustrated in figure 8.58 is the basic sample/hold patch shown in chapter 6, figure 6.63, page 80. The only difference is that sampled voltage and the sampling command are audio frequencies. The sample command should be several times higher than the sampled signal and thus it may be best to use a squarewave VCO for the time commands. The S/H thus samples the sinewave and turns it into a staircase wave. The number of steps and resulting timbre is dependent on the ratio of the sinewave frequency and the frequency of the sample command. Both VCOs could be tracked at a set ratio or may use two different controls to systematically (or randomly) vary the relationships to make the timbre dynamic.

Exercises

The next four examples are patch transcriptions from commercially available patch books dealing with various forms of audio-rate modulation. Look over the original notation and then, in terms of the general notation, transfer them to your own resources. If they do something nice, add them to your patch library. At this point you probably realize the importance of very precise tuning which most notation cannot accommodate. It might be a good idea to notate your "usable" patches in two ways: first write them down, and second, make the instrument and record the correct results on a cassette with appropriate reference numbers.

1. Figure 8.59 "Night Sounds"
   This instrument involves a nice combination of audio and sub-audio FM along with Ring Modulation. *The Source's* notational format is very close to the one used in this book, therefore I have taken the liberty of making minor format changes.
2. Figure 8.60 "Chimes I and II"
   Again from PAIA's *The Source,* these are two classic "chime" or "gong" patches, depending on the VCO offsets—and here also they have been renotated. Chimes 1 may be most interesting as the ADSR, greatly attenuated, causes a slight pitch shift in one of the VCO's, simulating the pitch bend resulting from the strike force of the gong mallet.
3. Figure 8.61 "Gasoline Engine"
   This instrument explores the realm between audio and sub-audio filter modulation. Noise is patched to a low pass filter which is being controlled by a low pulse wave. This is simple enough until you start approaching the audio range with the program LFO. Try controlling the program VCO with the keyboard and take note of the results—especially when the VCO begins to approach an audio rate. As the instrument is de-

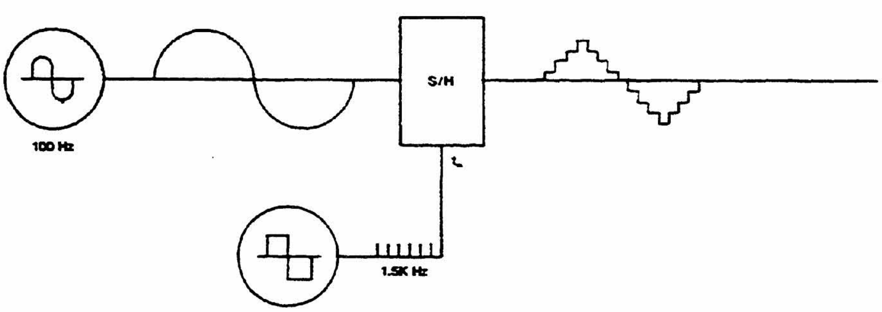

Figure 8.58. Audio-rate waveform sampling

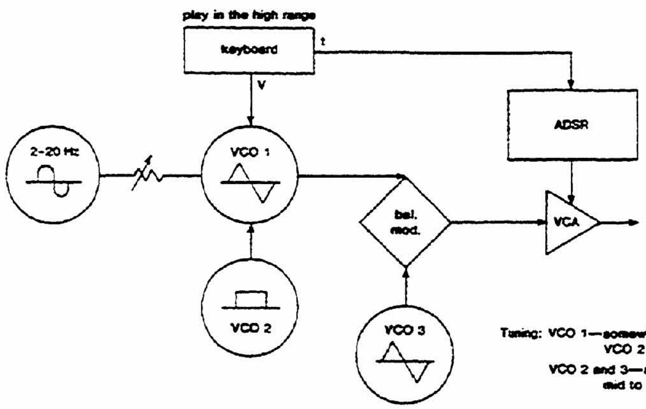

Tuning: VCO 1—somewhere between VCO 2 and 3
VCO 2 and 3—a unison in the mid to high range

Figure 8.59. "Night sound" (From *The Source-Book of Patching and Programming* from Polyphony)

CHIMES I

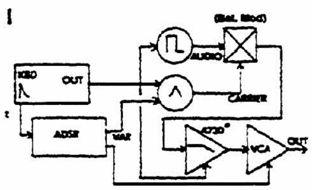

Keyboard: No glide; high pitch range.
VCO's: 4720 type, tuned within a fourth or fifth of each other.
4730 VCF: Low pass output; Q control–60%; Range control–40%. Fine tune this setting to get the most realistic chime sound.
4740 ADSR: Attack–0%
Release–40%
Variable Output – just enough to cause a slight pitch bend of the bell sound.

CHIMES II

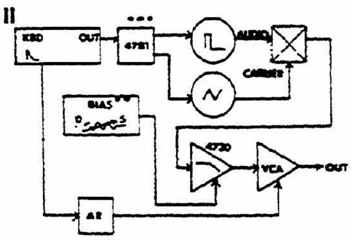

KBD: High Octave, No Glide
AR: Expand – Off
Attack – 0%
Decay – 75%
4730: Range – Maximum
Bias – 1 to 2 VDC set to just higher than the highest strong harmonic.
4781: Tune triangle to an augmented fourth above the pulse.
Pulse VCO: Pulse width approximately 30 to 40%.

*Low pass filter
**Represents and offset voltage
***Represents offsetting one leg of the keyboard voltage so the VCOs track in augmented 4th. This can also be done with the VCO offsets.

Figure 8.60. "Chimes I and II" (From *The Source-Book of Patching and Programming* from Polyphony. Used by permission.)

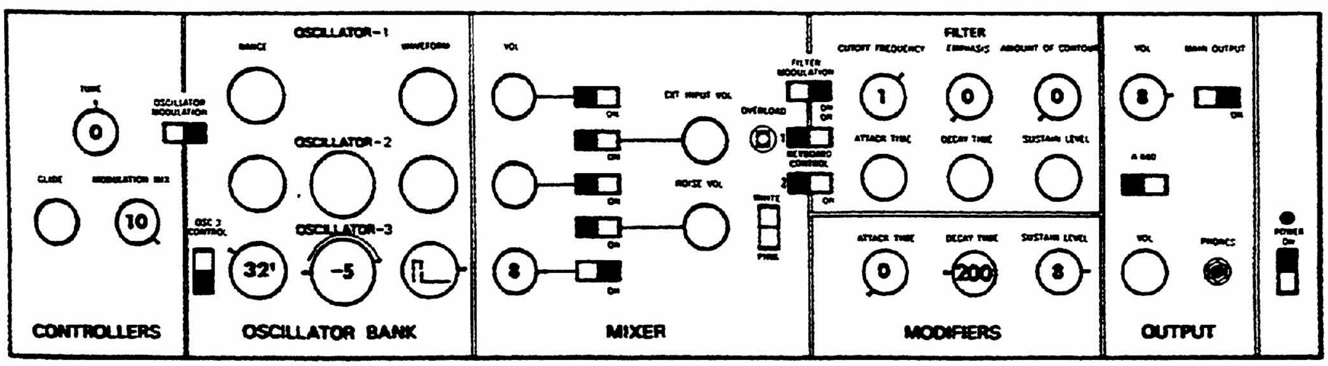

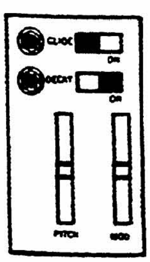

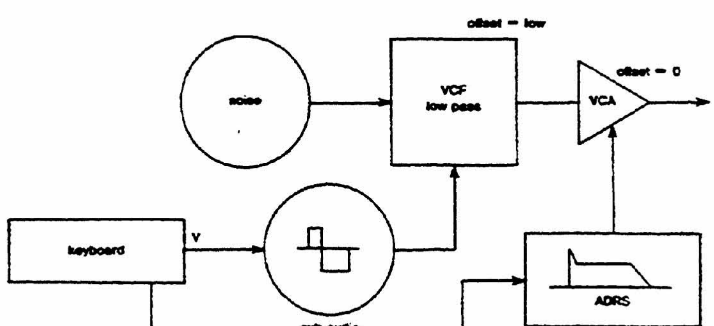

Figure 8.61. "Gasoline engine" from *Sound Charts-Minimoog* by Tom Rhea, Norlin Music. Used by permission.

fined the "engine" is periodic. How could you expand the patch to make it aperiodic? Finally, find a way to eliminate the keyboard.

4. Figure 8.62 "Celesta"

   In this patch two carefully tuned VCOs are Ring Modulated. Ring Modulation eliminates the two modulated frequencies leaving only the side-bands. But note that the two pitches are also patched, unmodulated, to the final mix. What pitches will be in the final mix? (A major third is a 5:4—refer to page 120). What frequency will be the perceived fundamental of this spectrum? Can you configure a patch which will give the same sound using Amplitude Modulation?

5. Figure 8.63 "Echoed Klang"

   Figure 8.63 are the patches for a simulated "echo" explained in chapter 7 (see page 105). For a sound source use any type of audio modulation instrument you can design and correlate the "echo" rate with some aspect of the instrument (carrier frequency, index, etc.).

6. Figure 8.64 "Metallic Sounds"

   This instrument, suggested by composer Daniel Kelley, creates some lovely "steel band" effects

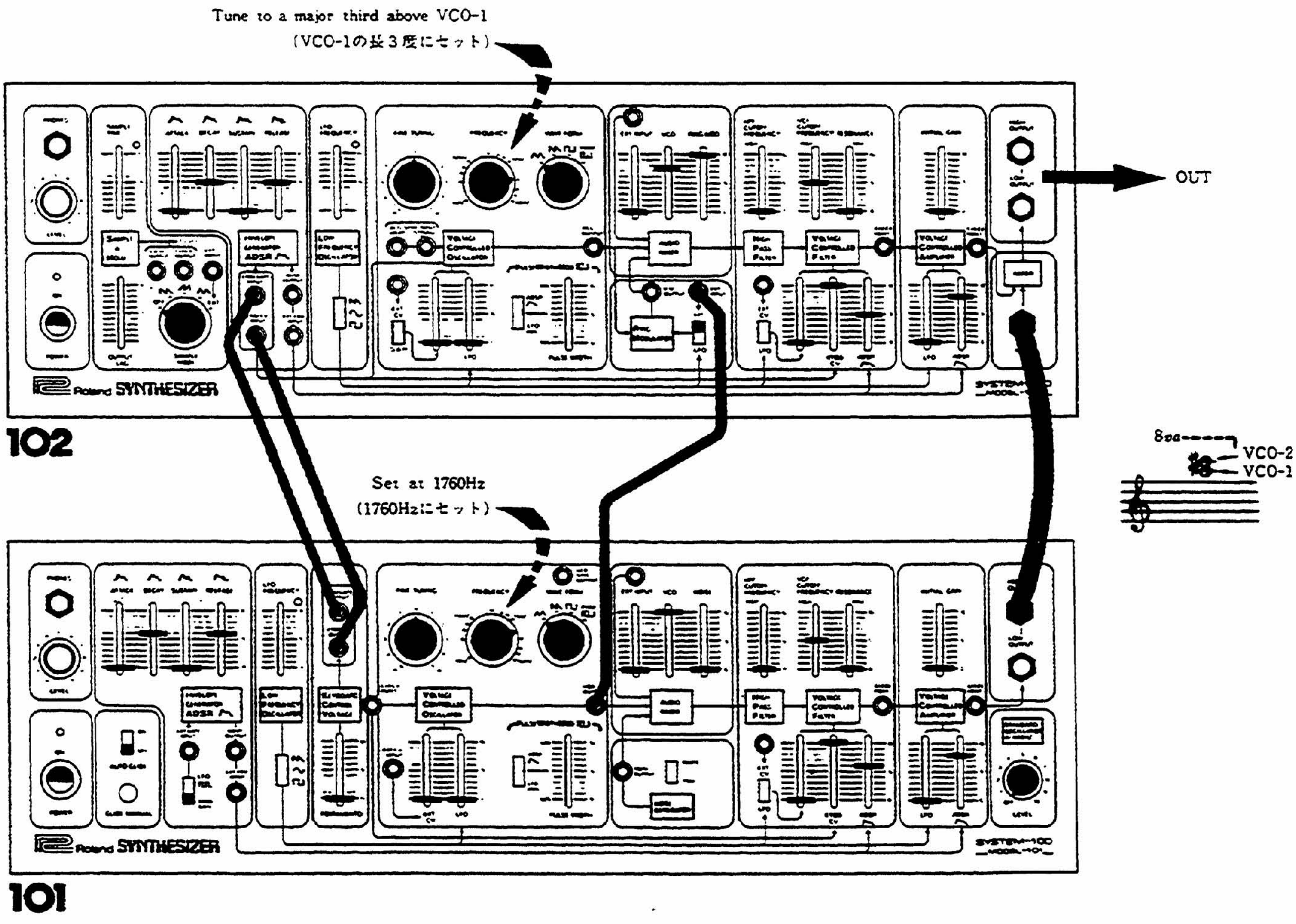

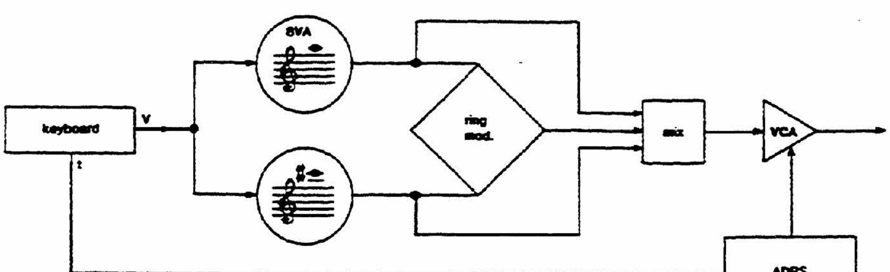

An exact transcription of the Roland patch would involve a great deal of redundancy due to the way the instrument is designed. This version has been simplified but gives the same results.

Figure 8.62. "Celesta" (From the *Roland System 100/Expander 102 Patchbook*, Roland Corp. Used by permission.)

and is usable in a wide frequency range. Note that the reference VCO is being Frequency Modulated in two opposing directions. The reference Program is simultaneously inverted and used as a second modulating frequency. This instrument was designed with the Buchla Frequency Shifter but should work on other systems as well.

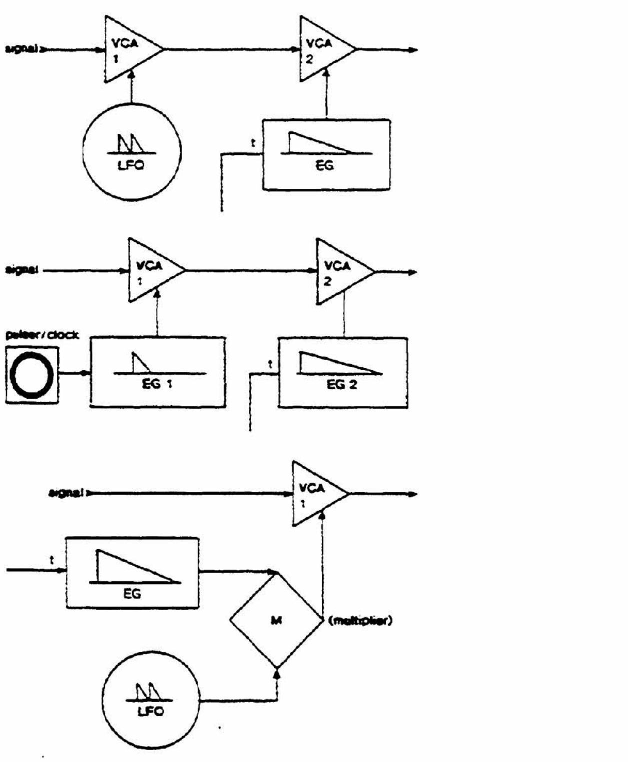

Figure 8.63. "Echoed clang." This is three possible ways of achieving the echo. The "signal" must be an audio modulation instrument. All VCA offsets are zero.

7. Figure 8.65 "More Metal"

   This configuration is a Ring Modulator or Balanced Modulator version of the previous patch. You should probably begin exploration with sine waves as this double modulation really cranks out a lot of non-harmonic sidebands.

8. Figure 8.66 "Timbre Cycles"

   This is an intriguing configuration based on the generation of harmonic sidebands via a Ring Modulator or Frequency Shifter. One VCO is tuned to a sequence of 5 pitches and this sequence continues to cycle, 1, 2, 3, 4, 5, 1, 2, 3, 4, 5, etc. The keyboard controls the other VCO playing a cycle of 4 pitches. The sequencer is triggered by the keyboard so strict homophony is guaranteed. Since each cycle is a different length, the relationship between the two is constantly changing and does not repeat until beat 21. Note, however, that the pitch relationships are simple harmonic numbers, which will result in harmonic spectra. The sequence of resulting ratios are:

1:1	4:3	3:2	8:3	3:2	3:2	1:1	2:1	4:1
1	2	3	4	5	6	7	8	9
1:1	2:1	4:3	3:1	8:3	3:2	3:2	2:1	2:1
10	11	12	13	14	15	16	17	18
2:1	1:1	1:1	4:3	3:2	8:3	3:2	etc.	
19	20	21	22	23	24	25		

By mixing the resulting timbral sequence with the output of VCO 2 the result is a four-note pattern imposed on a sequence of 20 timbres! Read through all of this again and then make the patch and play it. If you are interested, calculate the resulting spectral sequence.

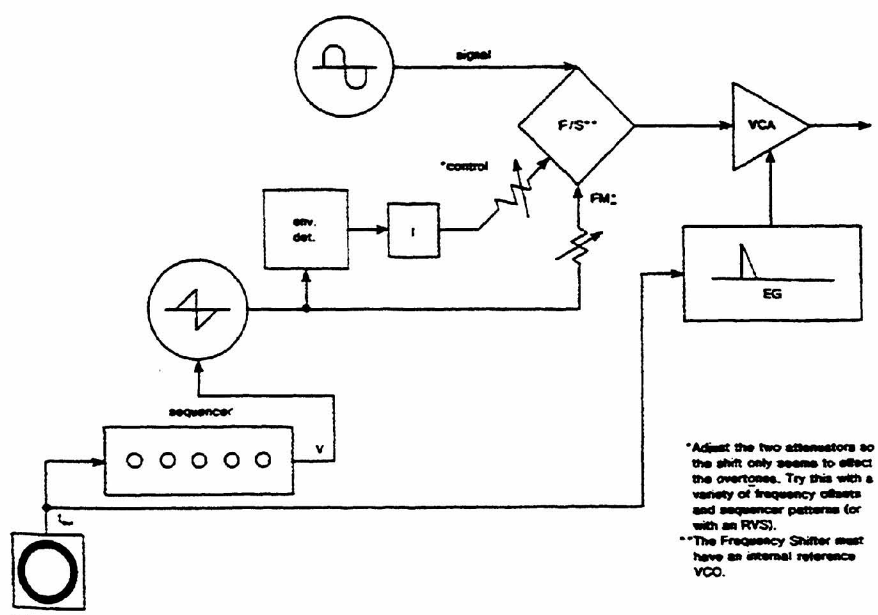

Figure 8.64. "Metallic sounds"

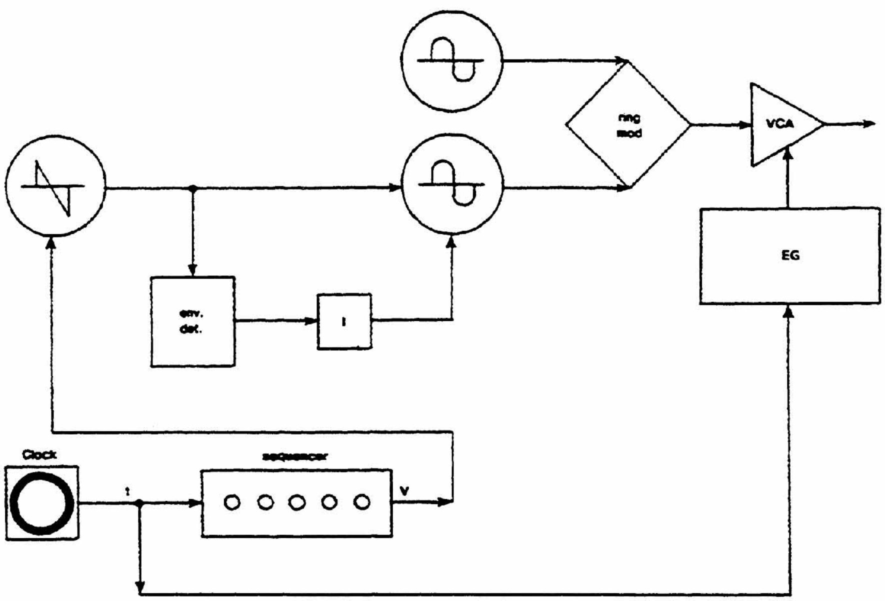

Figure 8.65. "More metal"

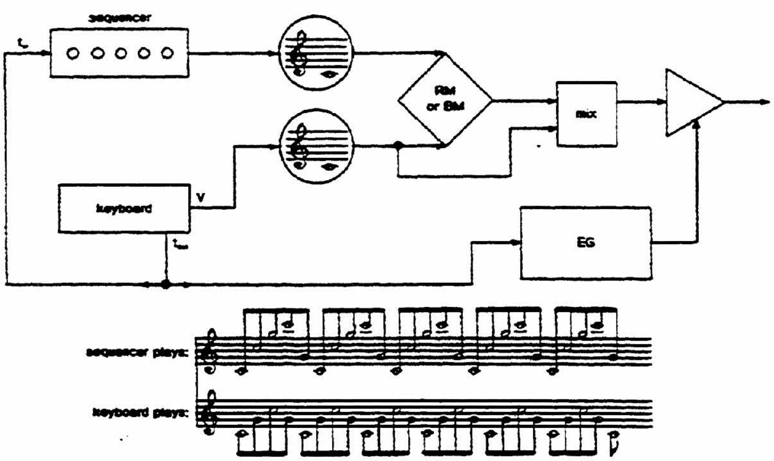

Figure 8.66. "Timbre cycles"

9. Go back to any of the patches in chapters 6 and 7 and add audio-modulation based instruments to the configurations.
10. Figure 8.67 "Players with Circuits" by David Berhman

This is a classic performance piece using instruments and a Ring Modulator. Find some players and try it. The performance requires that the instrument attacks be *exactly* together, and it is not as easy as it might look.

Players with Circuits

4—performer version

Performer 1 plays the part marked "sound source #1"
Performer 2 plays the part marked "sound source #2"
Performers 3 and 4 play the part marked "output control," 3 handling the oscillator, 4 handling preamplifier volume and tone controls.
A stopwatch is required for each performer (3 and 4 may share a watch).

Several instrumental realizations of sound sources #1 and #2 are provided, which may be used in any combination. If available, use electric guitars and/or zithers rather than pianos.

Equipment required for performers 3 and 4: a sine-square wave oscillator with a frequency range of 2 cps to 20,000 cps, a ring modulator, and a preamplifier with separate bass and treble tone controls.

Also required: additional preamplifier between microphones and signal input of modulator, mixers, and microphones, as shown in diagram. Guitar or contact microphones should be used to amplify the sounds of instruments used as sound sources #1 and #2. For piano, at least four microphones should be distributed throughout the bass-treble range of instrument, each one resting directly on strings but not attached, so that it is free to vibrate. Two or more microphones, if available, should be used to amplify the sounds of each guitar or zither.

To be arranged before performance:

There must be enough gain available after the ring modulator so that sound can be maintained indefinitely by performer 4 after the attacks by performers 1 and 2 have died out. (The strings of instruments used as sound sources should resonate in response to the loudspeakers, so that their microphones will continue to feed an audio signal into the modulator during the intervals between attacks). The modulator should 'if possible' have an internal preamplifier, with volume control, at its output, which in turn can be fed into a high level input of the external preamplifier. (Otherwise, modulator should be fed into a low level input of external preamp).

The amplitude control setting of the oscillator should be adjusted before performance for optimum effect on modulator (maximum output with minimum leakage); it should not be necessary to change it during performance.

To perform:

To begin, the four performers meet in order to start their stopwatches together. During the first minute, performers 1 and 2 return to their instruments and performer 4 very slowly opens his preamplifier volume control. A very slowly growing soft sound (made up of microphone feedback and leakage of the control signal through the modulator) should come from the speakers during the 30 seconds before the first attack at 1:00. Thereafter, the attacks themselves (at stopwatch intervals marked) should create an extremely loud speaker sound. Enough speakers and amplification should be used to fill the room with sound. Note (in diagram) that the sound system is monophonic.

All performers: make all attacks and switch position changes as precisely as possible with regard to stopwatch time.

Note to performer 4: once or twice during performance, especially after louder attacks, quickly reduce sound level to zero (must be within one second after any attack) and immediately restore it (somewhat more slowly) to usual high post-attack level (within two and a half seconds after the attack):

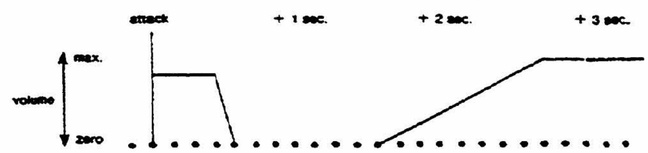

These should be the only silences in the piece: don't permit sound to die out gradually when longer intervals follow attacks. Keep volume moderate to full by raising volume control(s) when necessary to maintain the feedback-leakage equilibrium described above.

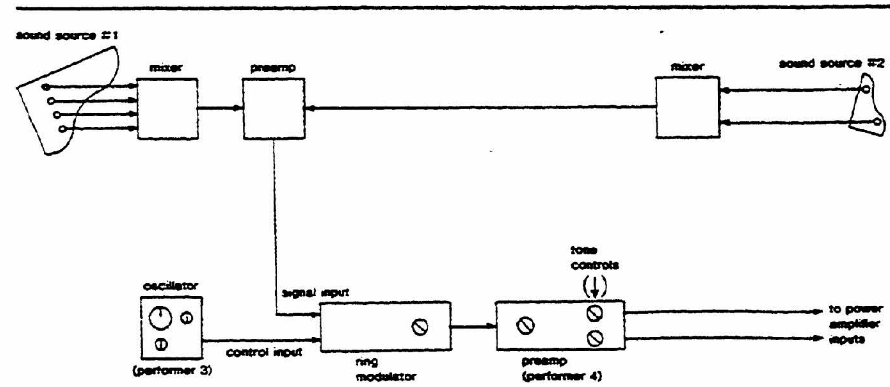

Figure 8.67. "Players with circuits" by David Behrman

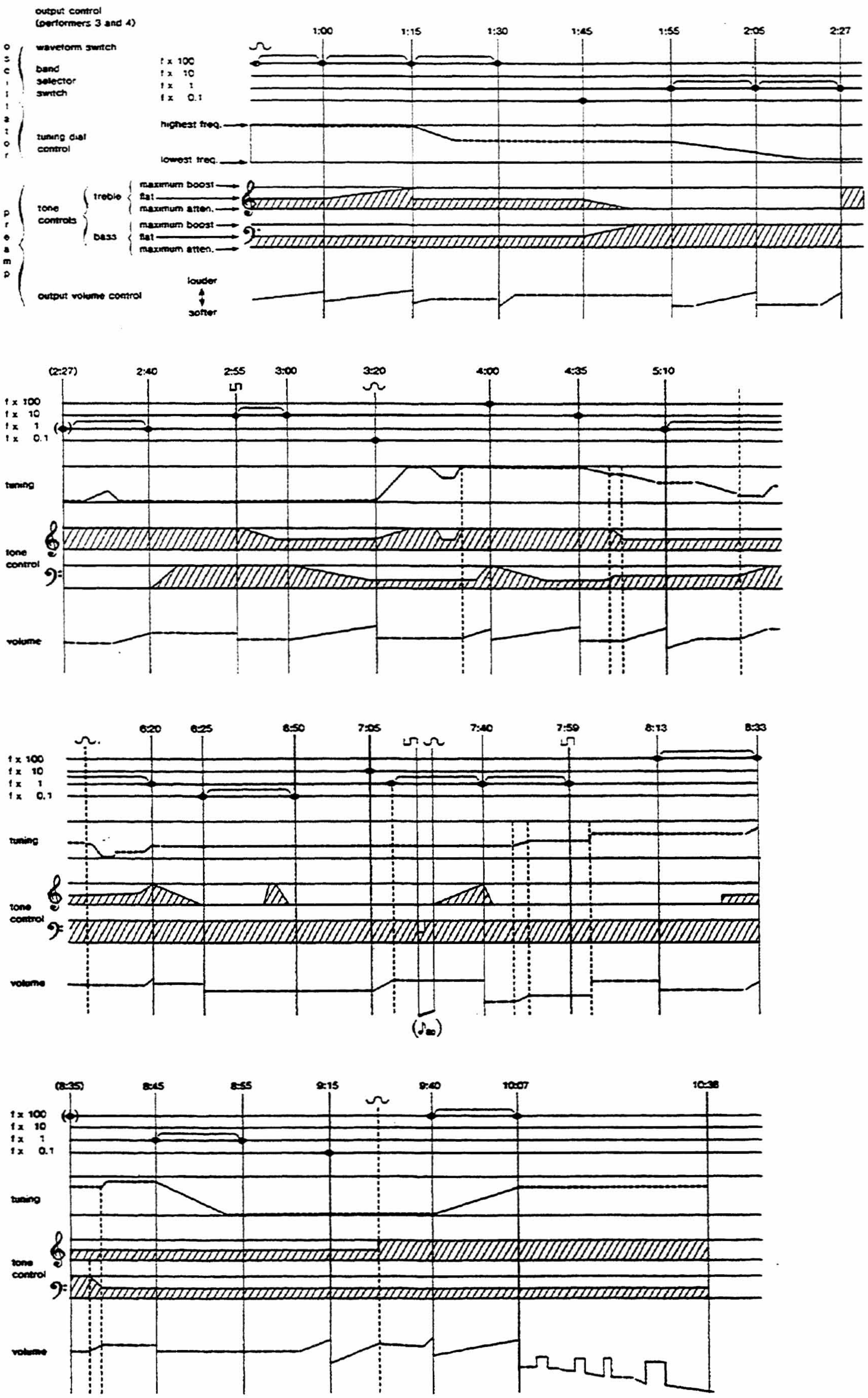

Figure 8.67 — *Continued*

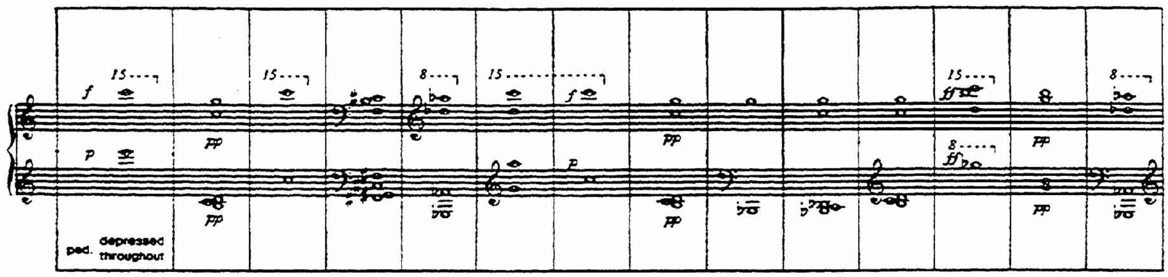

sound source 1—piano version

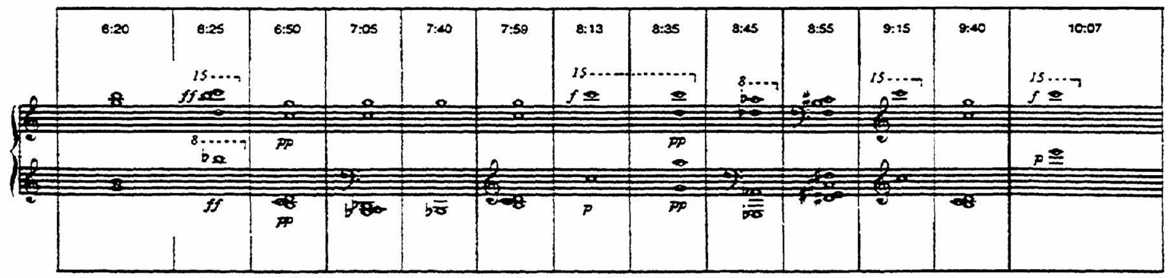

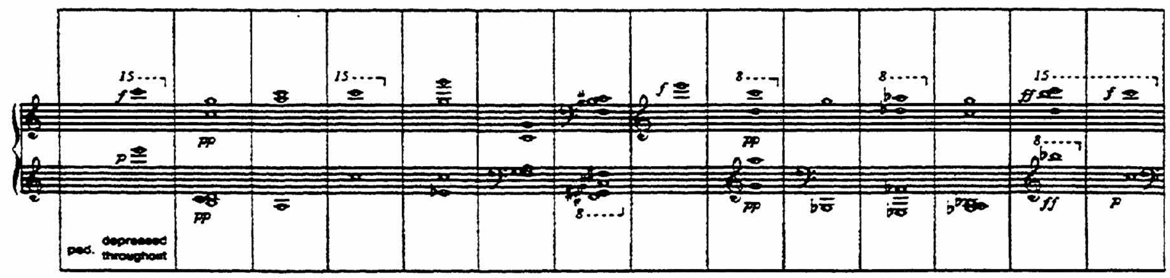

sound source 2—piano version

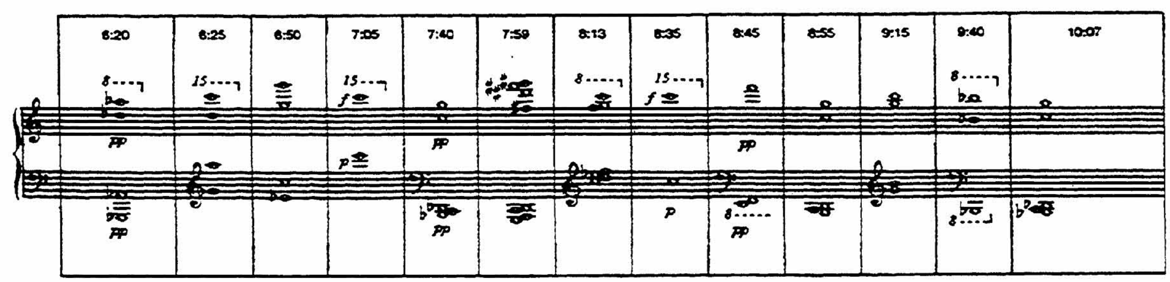

Figure 8.67—*Continued*

9 Equalization and Filtering

Equalizers and filters are best understood as frequency selective amplifiers and/or attenuators. A signal patched through an equalizer or filter can have any part of its spectrum amplified or attenuated in order to emphasize various frequency areas. At the same time these instruments can be used to attenuate and sometimes virtually eliminate unwanted colorations or noise. Both instruments, the equalizer and filter, share the common process of amplifying or attenuating certain parts of a sound's spectrum. There is, however, a difference between the two when it comes to actual applications. The equalizer is generally used to make adjustments in the entire spectrum by "fine tuning" various frequency areas. This type of processing may be used to *compensate* for unwanted colorations caused by a tape recorder, reverberation device, amplifier and speaker system, or the performance space itself. Other applications involve a complimentary approach of using the equalizer to *introduce* colorations in order to redefine a sound, such as giving a more nasal quality to a singer's voice or creating the effect of a miniature orchestra playing in a tin can. The filter more closely approaches the latter applications, as it has the task of extracting various spectral components from a sound. What is taken out and what is left depends on the filter format which will be discussed later in this chapter. The filter can generally be considered more of a major structural device for the musician, since it can constitute a major parameter in patch and instrument design.

Before a more detailed discussion of equalization techniques can take place, a standard unit of attenuation and amplification measurement must be established. Since loudness is a very subjective phenomenon, acousticians and engineers have decided on a more objective type of measurement of intensity which is called the decibel (abbreviated *db*). In the early days of cable telephone transmission, the unit of measurement was "miles-of-loss," which referred to the amount of intensity lost by resistance in a "loop-mile" (which was actually two miles—one in each direction). Some time later this rather ambiguous term was replaced by a logarithmic ratio called the "transmission unit" and was later re-named the "bel" in honor of

dbm	wattage	voltage
60	1000 watts	774.6
50	100 watts	244.9
+40	10 watts	77.46
+30	1 watt	24.49
+20	100 mw	7.746
+10	10 mw	2.449
0	1 mw	.7746
-10	.1 mw	.2449
-20	.01 mw	.07746
-30	.001 mw	.02449

Figure 9.1. Decibel scale with 1mW/600 ohm reference

Alexander Graham Bell. For the sake of practicality, a smaller unit, 1/10th of a bel, or "decibel," has been established as the standard unit of amplitude measurement. The decibel is not a fixed value like an ohm or volt, but rather an expression of the notable difference of intensity between two sounds or signals. Consequently, db levels must be specified in relation to some fixed reference. In the past years many different power levels have been used, such as 6, 10, 12.5 and 50 milliwatts.* In 1939 the electronics industries adopted a 1 milliwatt reference power in a 600-ohm line as the standard for zero db. When this .001 watt reference is used it is often expressed as dbm. The zero dbm rating also represents a level of 0.7746 volts. Figure 9.1 indicates the voltage-wattage and dbm levels for a 600-ohm line; −20 dbm indicates a level of −20 db referred to .001 watt, and +40 dbm indicates a level of +40 db also referred to .001 watt. As an objective measurement of loudness, a 1k Hz tone at 10^{-16} watts/cm^2 has been accepted as a standard. The reason for this is that that particular frequency at that particular level is very close to the threshold of audibility. Using these figures a very accurate measure of intensity can be made:

$$db = 10 \log I/I_0$$

$I = 10^{-16}$ watts/cm^2 and I_o = the intensity to be compared

therefore: $db = 10 \log I/10^{-16}$ watts/cm^2

The reason for this logarithmic scale to the base 10 is the tremendous sensitivity of the ear. The human

*The watt (w) is a specified unit of electric power which is required to do work at a fixed rate, and 1 milliwatt of course is 1/1000th of a watt.

- +120 db—Pain threshold
- + 90 db—Noisy traffic
- + 75 db—Orchestral brass instruments playing FF
- + 60 db—Orchestral strings and woodwinds playing FF
- + 45 db—Normal conversation at 10 feet
- + 30 db—Normal street traffic, residential district
- + 10 db—Normal whisper at 10 feet

Figure 9.2. Average decibel ratings of normal environments

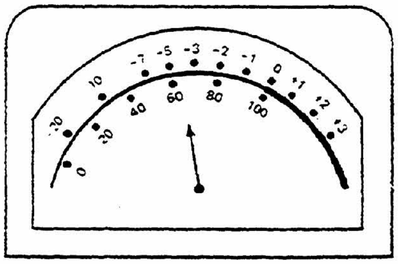

Figure 9.3. VU meter

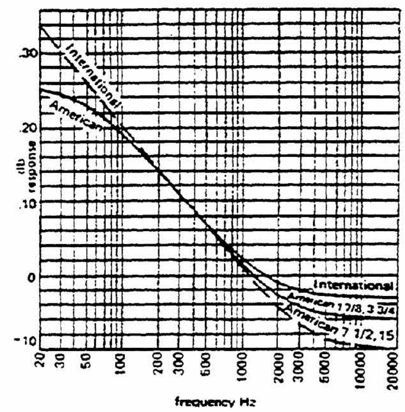

Figure 9.4. Standard equalization curves for tape recording (curves are for playback). (From Norman H. Crowhurst, *Audio Systems Handbook*, Blue Ridge Summit, Pennsylvania, Tab Books, 1969, p. 33. Used by permission of the publisher.)

ear is sensitive to pressure changes on a scale of 1,000,000,000,000 to 1. By using a log to the base 10, it is possible to express this on a scale of approximately 14 to 1, each unit representing a bel. By dividing this scale into units of 10, a decibel range of 0 to 140 is derived. A sound of 1 db is almost inaudible and a difference of 1 db is barely noticeable. Figure 9.2 lists various environmental conditions with their intensities rated in decibels.

Most professional recording and reproduction equipment such as mixers, recording and playback amplifiers, etc., are equipped with a meter which allows the decibel rating of the program to be visually indicated. These devices are referred to as VU meters, an abbreviation for "volume unit." VU meters are calibrated to a certain number of decibels expressing the ratio of the intensity of the signal being measured to the intensity of a .001 watt power signal in a 600-ohm line.

A "line level" signal means that it requires no preamplification and may be a direct wire-to-wire or "line" connection to a power amp. All audio signals within a synthesizer are usually line level.

The novice is often confused by the calibration of VU meters. The "0" level does not indicate zero db, but rather is an indication that when the needle reaches that point the signal is at the maximum level at which it can be recorded or reproduced without a certain amount of distortion.

With this basic understanding of decibel ratings, a more detailed discussion of equalization is possible. Just as the conductor of an orchestra must balance the various sonorities of the sections to achieve the desired sound, the electronic music composer learns to attenuate and balance various frequencies to achieve the desired timbre. Even the simple tone controls on the average hi-fi amplifier can be an invaluable tool for the composer.[1] Although the concept of equalization originates from a desire for accurate sound reproduction, the composer often uses it for very opposite effects. One of the simplest and most frequently used techniques in musique concrete and electronic music is the reproduction of sounds and speeds different from the original recording speed. The major difficulty with this technique is that the end result usually has a certain identifying quality about it in effect, which reveals what has been done. A 7½ ips recording played back at 15 ips sounds just like a 7½ ips recording played back at 15 ips, and the same is true of the reverse process. The basic reason for this is that by changing the playback speed, higher and lower frequencies are affected which were not inversely treated in the recording stage. By observing the American (the European curve begins with about a 34 db response at 20 Hz) Standard Equalization Curve used in tape recording playback, it can be seen that a 1k Hz signal has a flat response while a 2k Hz signal is attenuated about 3 db. (The recording equalization would be the exact inverse of the playback graph.) Therefore, when a 1k Hz signal is played back at twice the intended speed, it is equalized as a 2k Hz signal. This seems redundant, because a 1k Hz signal played at twice the speed would be a 2k Hz signal. The problems lie in the fact that this shift in the pre-equalization and post-equalization curves causes a noticeable loss in the high-frequency components of the recorded sounds. By using the tone controls on the pre-amplifier, this shift can be compensated for by boosting the high frequen-

1. The Nonesuch H-71224 recording of John Cage's *HPSCHD* comes with a performance score (KNOBS) so that the listener may "play" the equalization (treble and bass controls) and loudness for each channel.

cies. A half-speed playback can also be greatly improved by boosting the lower frequencies. It would be possible to make these adjustments in pre-equalization, but this usually involves a bit of experimentation and could result in a great deal of recording time. Many recorders are equipped with an equalization switch for recording at various speeds. If one is recording at 15 ips and planning to play back at 7½ ips, it might be possible to achieve better results by setting the equalization switch to record using 7½ ips equalization. Equalization may also be used to eliminate a certain amount of tape "hiss." The hiss is strongest at the higher end of the spectrum, so high-frequency attenuation will reduce it considerably. The problem here, however, is that this will also result in considerable attenuation of other high frequencies. Artificial reverberation also attenuates many of the higher frequencies, consequently a certain amount of equalization is needed to restore the sound to its original balance. It should be said again that the composer uses the controls to achieve whatever sound is desired. There is no right or wrong way to use equalization—it depends entirely on what you wish to hear.

Another type of equalizer sometimes found in preamplifier circuits is called a "presence equalizer" or "presence control." Frequently a recording or other reproduction sounds very dull, lifeless. A presence equalizer provides a mid-range boost centered at about 3k Hz and sloping to about 1.5k Hz and 6k Hz on each side. Most presence equalizers provide for a 6 db maximum boost, but usually even a smaller amount of gain will result in a very noticeable change in the sound.

Equalizers

Parametric Equalizers

Equalizer formats range from the common "bass" and "treble" controls found on hi-fi systems to professional "parametric" and "graphic" equalizers used in sophisticated recording and electronic music studios. A parametric equalizer is usually understood to be an instrument consisting of at least two or three filters. Each filter section is dedicated to a general frequency area within the audio spectrum. Parametric equalizers may be built into a studio mixing consol or may exist as a separate instrument like the Moog Three Band Parametric Equalizer pictured in figure 9.5. Each of the filter sections are a general "band-pass" format, which means they may boost or attenuate all of the spectral components within specified ranges. These limits or "bandwidths" will vary from manufacturer to manufacturer and are also dependent on the number of filter sections within the instrument. A typical three band parametric equalizer will have center frequencies variable between 20 Hz and 1k Hz (low range), 75 Hz and 7.5k Hz (mid-range) and 400 Hz to 20k Hz (high range). Once a center frequency has been specified its effective range may be specified by a control marked "bandwidth" or "Q".[2] On the Moog Parametric Equalizer each of the three bands may be as wide as four octaves or as narrow as ¼ octave. As an example of a general application, suppose a recording or performance sounded too bass. The musician could then use the equalizer, and with the center frequency controls he/she could find the general area of the spectrum causing the problems. There is no magic formula regarding the amount of attenuation required, therefore the musician must just experiment until it suits his ear. The amount of attenuation available will vary with design but it is usually somewhere between 12 and 20 db. Many of the commonly used "lead voicings" used in commercial electronic music can often be enhanced by using the mid-range section of the equalizer to give a spectral boost between 1k and 5k.

2. "Q" is a term referring to the efficiency of a filter and will be discussed in detail later in the chapter. In many equalizers Q is understood to mean bandwidth.

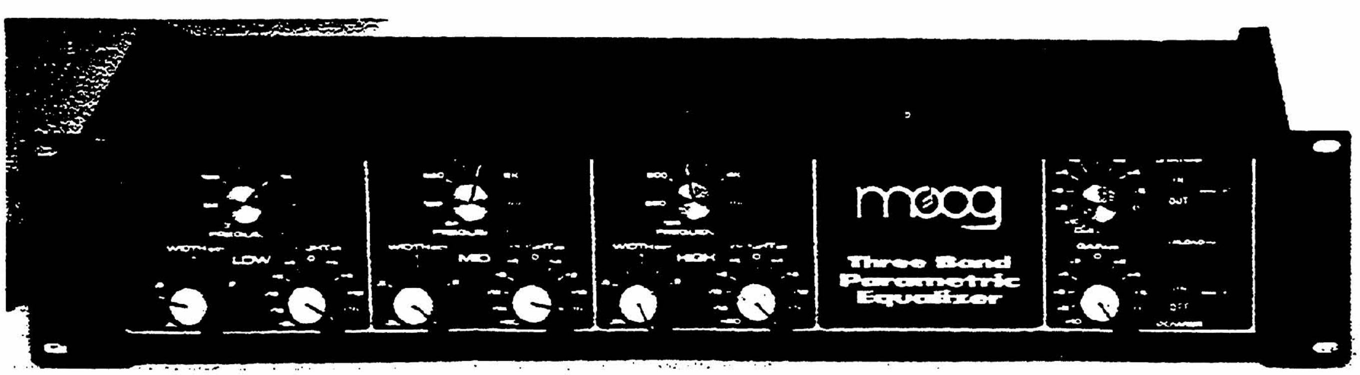

Figure 9.5. Moog three band parametric equalizer

Graphic Equalizers

While the parametric equalizer provides a great deal of control over the audio spectrum, the rotary controls for center frequency and bandwidth give the musician little visual feedback in terms of frequency response. This does not cause problems for the experienced musician, as most electronic instruments are not precisely calibrated. The "graphic equalizer" consists of a number of bandpass filters with fixed center frequencies spaced throughout the spectrum. The number of filters used in a graphic equalizer will vary with design,—between as few as nine or ten and as many as twenty-seven. Consequently the fewer the filter sections the wider the bandwidth, as illustrated in figure 9.6. The placement of each frequency is usually arranged by equally spaced musical intervals. An "octave equalizer" has a center frequency every octave, a "half-octave" filter has a center frequency every half octave, etc.

Figure 9.7 compares three graphic equalizers in terms of center frequency. The Soundcraftman TG 2209-600 is a ten-channel octave equalizer effective between 30 and 16k Hz. The Klark-Teknic DN-22 has eleven bands between 50 and 16k Hz, but here the center frequencies are placed roughly at intervals between a major and minor seventh, so that the octave equalization overlaps slightly. The Holland 186 has four sections which may be switched between a low, mid and high range. Note here that the center frequency spacing more closely corresponds to equal spacing of frequency rather than to equal musical interval. This center frequency distribution is based on a *Bark scale* corresponding to "critical bandwidths" of the human ear. The critical bandwidths are divisions of the audio spectrum which are relevant to subjective loudness and, to a certain extent, pitch and timbre. If noise is passed through a bandpass filter and the bandwidth is gradually widened, the subjective loudness will remain constant until a critical bandwidth has been exceeded. The precise relationship between critical bandwidth and timbre has been the subject of a considerable amount of research; and many audio practitioners prefer this type of center frequency distribution. Figure 9.8 illustrates the placement of these 24 "Barks" in comparison to actual frequency.

The real advantage of a graphic equalizer is that it provides instant visual feedback of the equalization curve. The amount of boost or attenuation for each filter section is accomplished by a slider pot, therefore the level of each section of the spectrum is proportional to the position of the pot. Graphic equalizers typically have a maximum boost or attenuation range between 10 and 15 db, although this will vary with design. The Moog Graphic Equalizer pictured in fig-

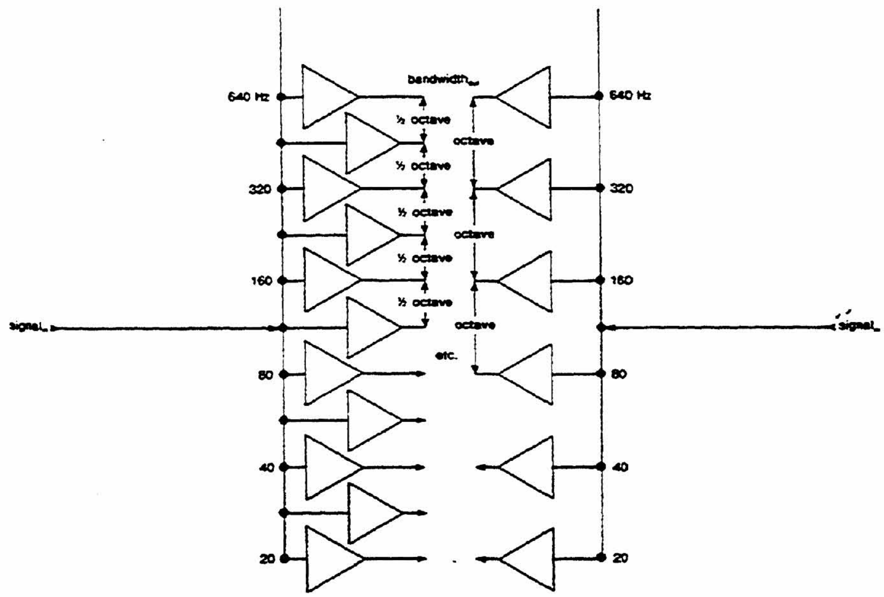

Figure 9.6. Octave and half octave EQ

Klark-Teknic DN-22:	30	60		125		250		500	1K	2K	4K			8K		16K
Soundcraftsman: TG 2209–600		50	90		160		300	500	900	1.6K	3K	5K		9K		16K
Holland low range:		50	100		200		300	400								
middle range:								400	800	1.5K	3K	5K				
high range:												5K	7K	10K	12.5	15K

Figure 9.7. Graphic equalizers with compared bandwidths

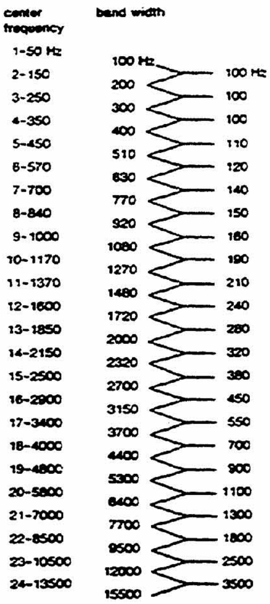

Figure 9.8. Bark scale (critical bandwidths)

ure 9.9 is a 10-band center frequency design with a ± 15 db range on each band. Graphic equalizers are commonly used to really fine tune and tighten up a sound for final recording or a live performance. Because of the mutlitude of filters in the instrument it can be used to suppress troublesome resonances at a variety of points in the spectrum, boost low frequencies, and to a certain extent remove noise from the high end of the spectrum.

Whether you use a parametric or graphic equalizer, you should realize that the loudness of a sound is determined by the total spectrum. If a sound is already at an amplitude level just below a point of distortion, boosting any part of the spectrum will raise the overall amplitude and may cause problems in recording or reproduction overload. In this case the overall sound level may have to be attenuated to keep things within safe limits. By the same token, attenuation of critical areas of a spectrum will cause an overall gain or loss, so that the sound may have to be boosted to re-establish a suitable loudness. The reactive components of an equalizer's circuit will cause a certain amount of phase shift to the signal. If this causes problems there is little that can be done about it, as phase corrective networks can be both expensive and complicated. The best adjustment is to use a minimal of eq (equalization) to minimize the phase shift, or just learn to live with it!

EQ Applications

The most efficient use of equalization only comes through experience, and effectiveness depends upon individual sound preferences. The following summary, however, may be of some help in at least getting in the right area of the spectrum before any fine tuning is attempted. This categorization is based on general equalization practices and is discussed in many recording technique references. These generalities have been slightly modified here to be more applicable to electronic sound.

16-60 Hz: This is the real power range of sound. A moderate boost to this register can provide a bottom end that is usually felt more than heard. Two words of caution here: 1) be careful that too much boost does not overload the speakers. Electronic instruments can generate high magnitude sine waves and too much power in this range can possibly do some speaker damage. Excess boost in this range can also clutter or muddy the sound. Annoying hum from pre-amps or ungrounded equipment might be cleaned up by selective attenuation around 60 Hz (see page 151).

60-400 Hz: This range usually contains the fundamental of most events, especially acoustic instruments. One must be careful in changing the balance on fundamentals. This can upset the balance of the entire spectrum by making the sound too thin or bottomless with excessive attenuation. Too much

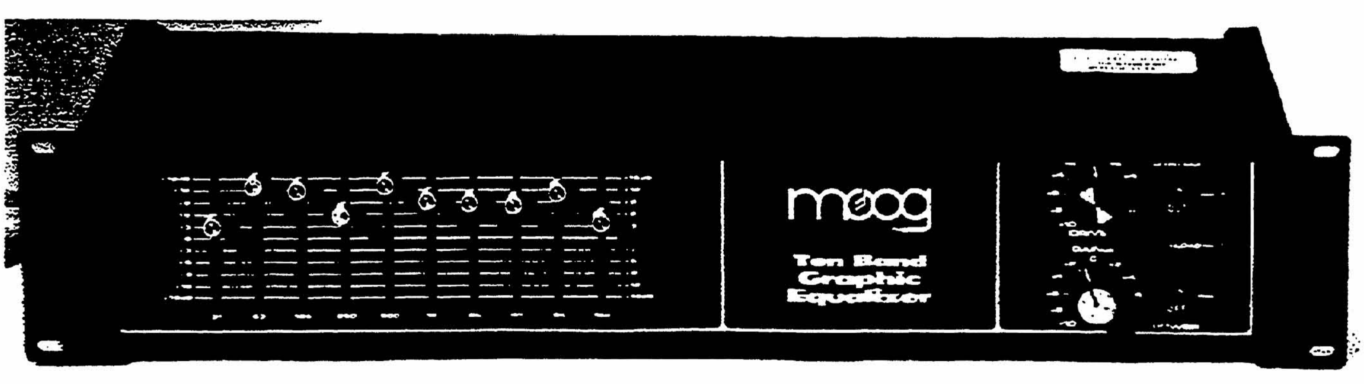

Figure 9.9. Moog graphic equalizer

emphasis will make the bottom heavy and dull sounding.

400-2K Hz: This is the normal mid-range for acoustic instruments, although it can be extended in both directions for electronic instruments. This range contains the clearly audible parts of a sound's spectrum and should be treated with care. Proper emphasis can add clarity to a voice, but too much of the upper end of this register will make the sound somewhat "tinny." Since this range contains a great deal of information, too much boost can often cause what is known as "listener fatigue." As the expression implies, the ear actually becomes overworked and could result in an ineffective listening experience.

2K-6K Hz: This is the general "presence" register for the wide spectrum range of electronic sounds. Boosting the middle of this range can bring the sound more to the "front" of a mix. A standard recording practice is to boost the area apprixImately 5K, which makes the recording or performance sound brighter *and* louder. High energy square waves around 3 or 4K can be very piercing, therefore these events may call for a bit of attenuation. Around 4 to 6K is the "clarity" area for instruments, but too much boost here can also cause listener fatigue. At the higher end of this range there is apt to be a certain amount of noise introduced by the recording process or by noisy equipment. Careful attenuation here can reduce the noise, but take care that the spectrum is not significantly changed.

6K and up: This range will determine the general brilliance of acoustic sounds. Some electronic sounds have their presence in this area. Tape hiss is very audible at this end of the spectrum, hence some slight attenuation can usually clean up the recording. Many modulation spectra can be brightened up by boosting the range, which in effect adds gain to the high end of the summation frequencies.

Filters

High-Pass Filters

While one function of an equazier is to attenuate various parts of the frequency spectrum, it is a filter's job to totally eliminate various frequencies and frequency bands. In general, a filter is a circuit or network of circuits for the transmission and elimination of selected frequencies. In working with white sound sources, the use of filters makes it possible to divide the white sound into smaller bands of colored sound. In figure 9.10A, the white sound spectrum is represented with an overall amplitude of 60 db. With a "high pass" filter, it would be possible to eliminate

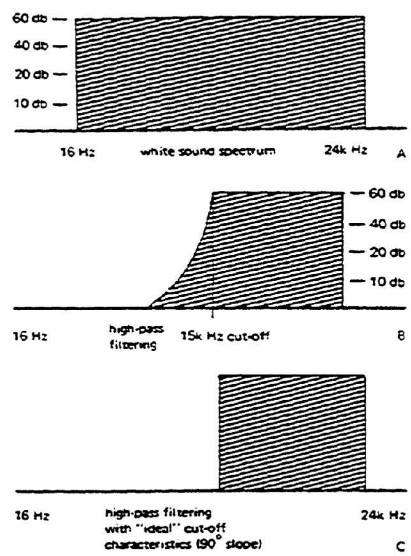

Figure 9.10. High-pass filter applications to white sound

the lower portion of this spectrum. The frequencies which are attenuated by 60 db are referred to as the "stop-band" or "reject band." The remaining frequencies are referred to as the "pass-band." In general terms, the point at which the attenuation begins is called the "cut-off frequency," and with variable filters this cut-off can be set at almost any point in the spectrum. In figure 9.10B, the cut-off frequency is 15k Hz. In more specific terms, the cut-off frequency is actually the point at which the filter causes 3 db attenuation in the spectrum.

It is much easier to observe the effectiveness of a filter in graphic terms. The ideal filter would provide an abrupt blockage of all frequencies, beginning with the cut-off frequency as shown in figure 9.10C. This 90° "slope" is almost impossible to achieve, however, due to the characteristics of the filter's components. In very simple filters the slope is about a 6 db per octave "roll-off." This means that the efficiency of the filter is now measured in terms of rate of attenuation per octave. A more efficient filter may have a 24 db per octave rolloff (see figure 9.11). As will be explained later in this chapter, a high-Q or sharp cut-off filter may be the most desirable for work in electronic music. On the other hand, a gradual-slope filter has the advantage of being used as an equalizer.

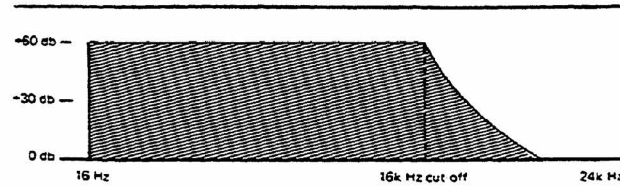

Figure 9.11. Low-pass filter with a 16k Hz cut-off

Low-Pass Filters

In addition to the high-pass, there are several other filter designs. The low-pass filter achieves the exact inverse effect of the high-pass filter. As with the high-pass design, the cut-off frequency of the low-pass filter can usually be set at any point in the audio spectrum. In using a low-pass filter, it would be possible to affect either end of the spectrum shown in figure 9.12, or to have a cut-off frequency at any point between these two extremes.

The most valuable application of high- and low-pass filters is in shaping various timbres by removing overtones. As a hypothetical situation, suppose a composer had produced a very complex timbre as notated in figure 9.13A. In this case the composer felt the sound was too "bright" ar had too much "bite" for his preference. One process he might apply to reduce this is low-pass filtering. By passing the timbre through a low-pass 40 db/octave filter with a cut-off frequency of 1.1k Hz, the top partials would be attenuated, thereby taking some of the "edge" off the sound (figure 9.13B). An even sharper roll-off would remove these partials completely, without affecting the intensities of the lower partials (fig. 7.13C). Another method of eliminating the top partials is to set the cut-off frequency at some point lower than the lowest partials to be eliminated, perhaps 950 Hz. This will add more attenuation to the top partials but, due to roll-off, it would be at the expense of some of the lower partials (fig. 9.13D).

All of the above treatments can also be applied in working with a high-pass filter. Beginning with the same timbre as in figure 9.13A, suppose that the composer wished to attenuate or eliminate some of the lower frequencies. Again the cut-off frequency must be adjusted to produce the desired timbre (fig. 9.14).

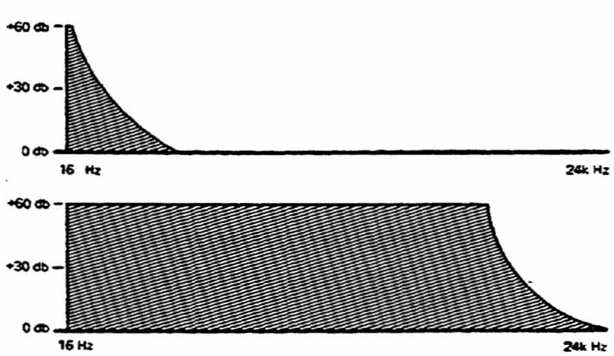

Figure 9.12. Low-pass filtering of white sound

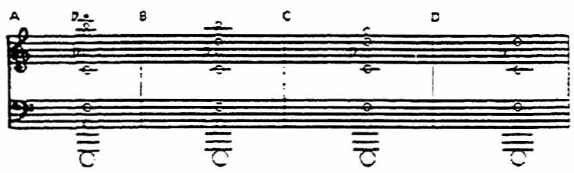

Figure 9.13. Notation of low-pass filtering of a complex timbre. Relative amplitudes of individual frequencies are indicated by the size of the note

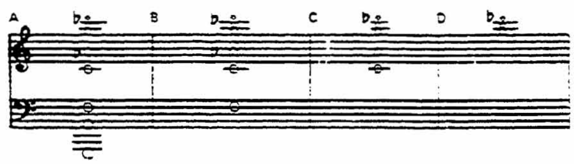

Figure 9.14. Notation of high-pass filtering of a complex timbre

Band-Pass Filters

A third filter design to be considered is the "band-pass." The high- and low-pass filters were limited to attenuating either the relative low or high ends of the spectrum. The band-pass filter has the function of attenuating or eliminating both ends of the spectrum at the same time. Referring again to white sound, the ideal band-pass filter could eliminate any amount of sound from each end of the spectrum. But of course this instantaneous transition from band-pass to band-stop exhibits less accurate slopes, such as those shown in figure 9.15. The frequency midway between the high and low cut-off frequencies is referred to as the "center frequency." In some designs the band-pass frequencies are determined by two pots; one for the lower cut-off frequency (high-pass), and one for the upper cut-off frequency (low-pass). By adjusting these two cut-off frequencies, it is possible to produce various band-pass patterns ranging from a very wide "shelf" pattern to a very narrow "bell curve" (figure 9.16).

Bandpass filters have various formats for the determination of the center frequency and for setting the band-width. The band-width is the spectrum of frequencies to be passed. There are several ways to indicate this. The first is by using a separate pot for the high and low cut-off frequencies; the second is to have a single pot with "maximum"—and "minimum" settings. The latter, of course, tells the composer nothing about what the maximum and minimum settings represent. The minimum may be a 200 Hz band-width and the maximum may be a 300 Hz band-width—which isn't a great deal of variation especially at higher frequencies. Some pots are calibrated with arbitrary numbers −1, −, −3, 0, +1, +2, +3, etc. Again, this gives no information as to the exact band-width, and the

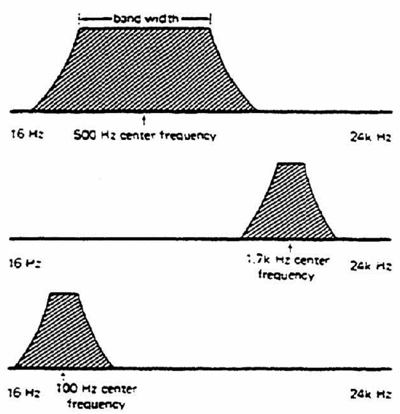

Figure 9.15. Band-pass filtering of white sound

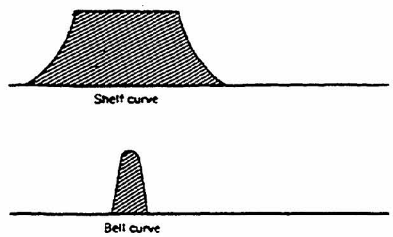

Figure 9.16. Shelf and bell pass bands
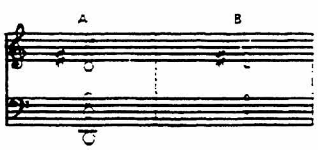
Figure 9.17. Timbre modification with a band-pass filter

composer would have to refer to the manufacturer's specifications for information and would probably end up calibrating the pot himself. The fourth and most standard (in scientific terms) method of determining band-width is "percent band width." This is defined as $(f_h\text{-}f_l \times 100\%)/\sqrt{f_h f_l}$, where f_h is the cut-off frequency, the −3 db point, and f_l is the standard total attenuation point, −60 db. This involves considerable mathematics, and a discriminating ear works just as well.

With the band-pass filter it is possible to "center in" on any partial or group of partials of any existing or constructed timbre. By beginning with a saw-tooth wave (figure 9.17A) and subjecting it to band-pass filtering, it is possible to produce a timbre as illustrated in figure 9.17B.

Minute inspection of timbres can be achieved by scanning a particular timbre with a very narrow band-width band-pass filter. This technique would be analogous to the musician producing the natural harmonic series on a string instrument by lightly running his finger up and down the string from node to node. More will be said about this when discussing Q.

If a studio or system is not equipped with a band-pass filter, it is possible to create band-pass results by using a low-pass and a high-pass filter in conjunction with each other. To achieve the bell curve shown in figure 9.16, the signal would first have to be processed through a high-pass filter with a 900 Hz cut-off and then through a low-pass filter with an 1,100 Hz cut-off. A precaution to observe here is that both filters should have the same roll-off characteristics or the curve will be uneven and the center frequency will not be in the center (see figure 9.18).

Filter Q

Most low-pass and band-pass filters allow further modification by a provision called "Q". Also known as "regeneration," "resonance," "response," "feedback," etc., Q is a measure of the efficiency or sharpness of a filter. For a band-pass filter, Q is calculated by dividing the center frequency by the bandwidth. In figure 9.19A the center frequency is 500 Hz and the bandwidth is 100 Hz (450-550 Hz). The Q factor is then 500:100 = 5. If the bandwidth were narrowed to 50 Hz (475-525 Hz as in figure 9.19B), then the Q would be 10. This narrowing of the passband audibly isolates the individual spectral components as they are examined by the filter's center frequency. In graphic equalizers the term Q is often substituted for bandwidth. It should be understood that a Q factor is only meaningful when both the center frequency and bandwidth are known. A 100 Hz bandwidth at 500 Hz yields a Q of 5, but the same bandwidth at a 1k Hz center frequency (950-1050 Hz) produces a Q of 10.

Try patching a sawtooth wave through a band-pass filter with a moderately high Q setting. Manually sweep the filter through the sawtooth's spectrum and count the individual overtones as they come into the passband range. Each harmonic should be fairly obvious, at least up to the eleventh or twelfth. Beyond this point the individual frequencies are very close together and a higher Q may be needed to isolate them. This experiment points out two phenomena. If the center frequency is tuned to the fundamental of the waveshape, a high Q filter may tend to distort and the distortion decreases with higher center frequencies. With classic waveforms the fundamental contains more energy than any other harmonic. Since Q can

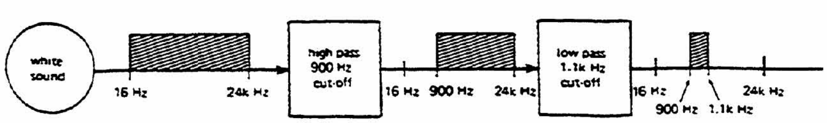

Figure 9.18. Series connection for band-pass filtering

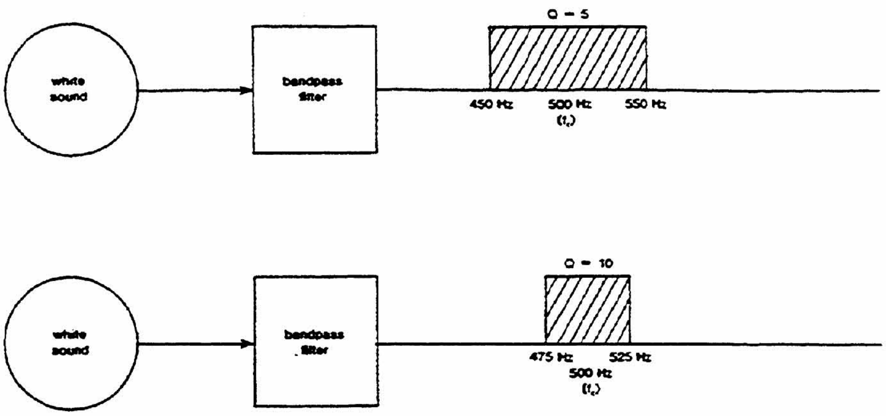

Figure 9.19. Band-pass Q

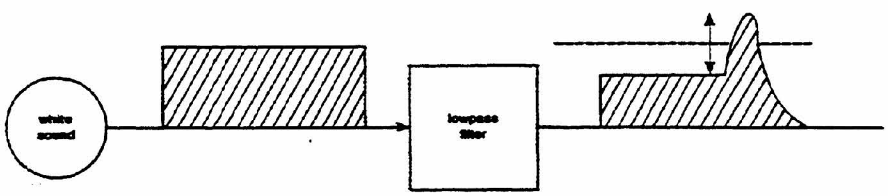

Figure 9.20. Low-pass filter Q

be thought of as increased energy of the center frequency, increasing the energy of an already high energy sound may lead to circuit overload and distortion. If you have this problem simply turn down the Q as the center frequency approaches the fundamental. This logic can be built into an instrument with a voltage controlled compression patch as discussed later in the chapter (see page 160). Another problem you may encounter with a high Q filter is circuit oscillation. A filter circuit is somewhat similar to that of an oscillator. If the Q goes beyond some critical point the filter will in fact oscillate and can often be used as an effective sine wave oscillator. This is more frequently the case with low-pass filters, and because of this the maximum position of the Q pot is often marked as "oscillation."

Low-pass filter Q can be described as an increase in gain or amplitude at the cut-off frequency. As illustrated in figure 9.20 this resonant peak is usually accomplished by simultaneously raising the gain of the cut-off frequency and lowering the gain of the rest of the spectrum. High Q low-pass filtering can produce the same distortion problems as bandpass filter. Here also the solution is to keep the Q factor under control by careful tuning.

Q may be added to a band-pass or low-pass filter even if it does not have a Q control. The solution is to use the filter to regenerate or reinforce the cut-off or center frequency. As illustrated in figure 9.21, the filter output is split and one leg is fed back to the input of the filter. One must consider, however, that there is a critical phase shift in the pass-band at the cut-off or center frequency. If this shift is 180° and

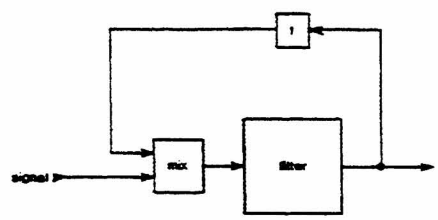

Figure 9.21. "Q" technique by external signal regeneration

the output is mixed with the input, the result will be cancellation of the signal. The solution is to patch the feedback leg through a phase inversion circuit so that it comes back "in-phase" with the original signal. The in-phase mix will result in a boost in gain of the center or cut-off frequency and produce a higher Q. The circuit used for the phase shift can usually be a mixer with positive and negative outputs, the negative output being the inverted form of the input. If the mixer does not have a dedicated negative output, the circuit will still usually introduce a certain amount of phase shift dependent on the gain. In this case some experimentation will be needed to find the correct phase relationship by tuning the gain but is nevertheless an effective patch.

Notch Filters

The inverse of a band-pass function is the band-reject, band-stop, or notch filter (also sometimes referred to as "band-elimination" or "exclusion filters"). As the name implies, the function of this filter is to notch out a selected band of frequencies from the spectrum. Figure 9.22 illustrates a few of the many band-reject spectra. Figure 9.23 shows, in musical notation, the effect of the above curves on a single timbre. As with

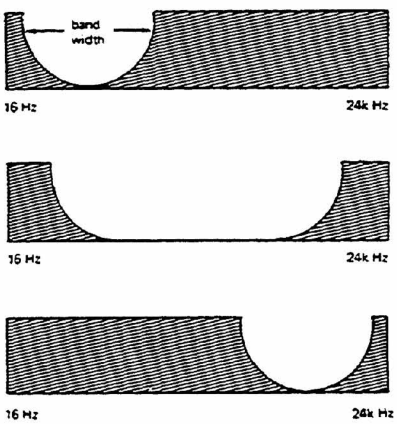

Figure 9.22. Band-reject filtering of white sound

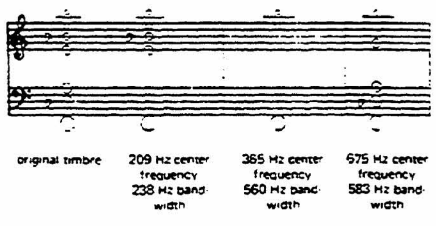

Figure 9.23. Notation of the effects of band-reject

the band-pass filter, the center frequency and band-width of the band-reject filter may be controlled by using two different pots. The difference is that the lower cut-off point determines the low-pass frequencies and the higher cut-off point determines the high-pass frequencies,—thus producing a rejection of all frequencies between those two points. In the case of the band-reject filter, the center frequency refers to the frequency in the center of the rejected band. In the same manner, band-width refers to the rejected band of frequencies.

Just as a high- and low-pass filter may be connected in series to produce band-pass functions, they may also be connected in "parallel" to produce band-reject functions. A parallel circuit is one in which the signal is divided between two or more components. In this case the signal is split with a "Y" network* parallel outputs or a multiple and then passed simultaneously through both filters and then mixed back together to produce a band-rejected signal (fig. 9.24).

*A "Y" network or "Y" plugs have three branches usually used as 1 input and 2 outputs. Using "Y" plugs as mixers, 2 inputs and 1 output is usually unsatisfactory, see chap. 8.

In several commercial electronic music systems, the band-pass and band-reject functions are produced by series and parallel wiring. This can be achieved instantaneously by a "filter selector" or "filter coupler" switch. If the switch is off or in the "independent" position, both the high- and low-pass filters operate independently of each other. With the switch in "band-pass" position, the two filters are internally hooked in series, and in the "band-reject" position the filters are hooked in parallel. If a coupling switch is not available, the external patching is still relatively easy to accomplish.

All of the filter designs discussed thus far have been variable in terms of band-width and center frequency. A non-variable filter is usually a band-pass network designed to attenuate a particular fixed band-width in the same manner as a graphic equalizer. As the name implies, these fixed filters cannot be varied except by internal component substitution, and this involves a great deal of time, both in computations and in soldering. Many studios are equipped with 60 Hz and 120 Hz fixed filters which are usually used to reduce the 60 Hz and 120 Hz hum often caused by unshielded wiring or poor ground connections. (In the United States alternating electrical current is based on a 60 Hz supply frequency which is often audible as 60 Hz or 120 Hz hum—the 120 Hz hum being a result of the 2nd harmonic.) By passing the signal through a 60 Hz and 120 Hz filter, this annoying hum can be reduced and often eliminated. In this particular case, the filter's Q is critical, since a wide band-width would attenuate other frequencies around the 60 Hz and 120 Hz center frequencies.

Filter Banks

One of the most valuable tools for the composer is the fixed-filter bank—several fixed filters housed within a single chassis. One basic filter-bank design consists of one input which is bussed to several individual filters, each with its own output. The filter bank shown in figure 9.25 consists of a low-pass (400 Hz cut-off), two band-pass (400 Hz to 1k Hz and 1k Hz to 3k Hz), and one high-pass filter (3k Hz cut-off).

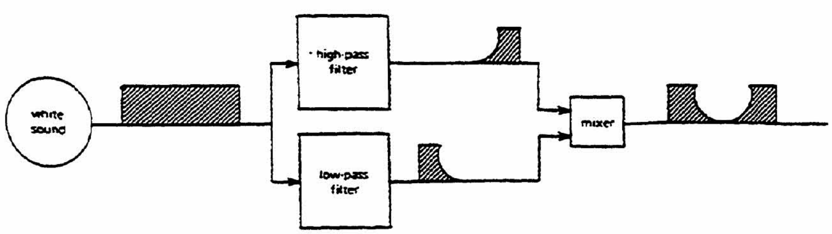

Figure 9.24. Parallel connection for band-reject filtering

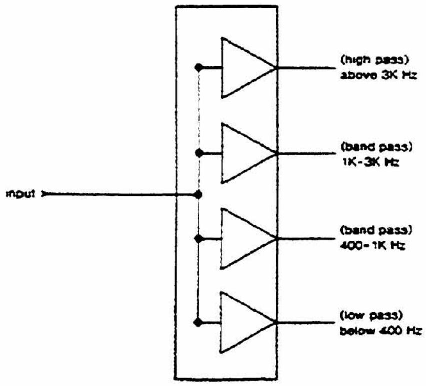

Figure 9.25. Fixed filter bank or comb filter

There is no standard band-width or number of frequency bands employed in filter-bank design; this will vary greatly according to the individual manufacturer.

This filter format resembles a graphic equalizer except for the fact that filter banks usually only provide unity gain of each part of the spectrum. Each pass-band may be attenuated by its corresponding pot but very seldom does it provide gain increase. Graphic equalizers usually provide boost to each pass-band. This, of course, does not prevent the filter bank from being used to equalize a spectrum and this is often its prime application.

Universal Filters

The Universal or Multimode filter is simultaneously a high-pass, low-pass, band-pass and notch filter, all with independent outputs. The high, low, and band-pass frequencies are shared by setting a single control, and the notch center frequency can usually be adjusted by a sesparate control, but will be within a step or two of the center frequency of the specified band-pass. The Eu Universal Active Filter is pictured in figure 9.26. In addition to the obvious filtering curves available from such an instrument, it can be used to create a striking quadraphonic space using the patch shown in figure 9.27. Each of the passband outputs is taken to a different output channel and distributed in the four corners of a performance space. Each speaker will then produce a particular pass-band so that the spectrum is distributed according to spectral range throughout the room. Unlike dedicated high-pass filters, the high-pass output of the multimode filter can have an effective Q. Also, with this design the rest of the spectrum is not attenuated in relation to higher Q values.

One of the more interesting applications of this type of filter is called "filter ringing." By patching a sharp transient, such as a keyboard trigger, to the filter input, the circuit will ring at the specified cut-off frequency. You can try this by patching the trigger output of the keyboard to the signal input of the

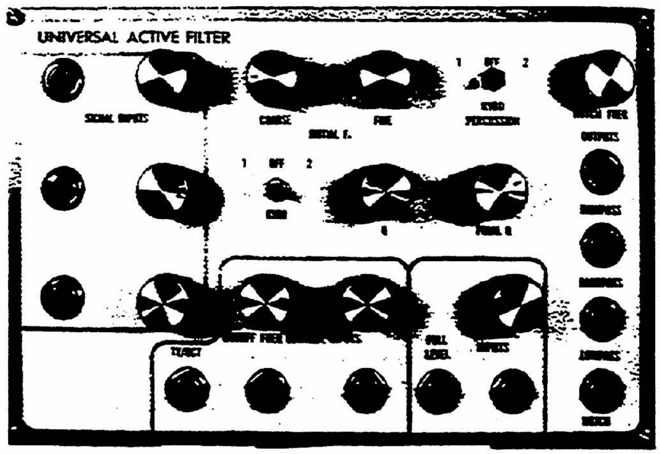

Figure 9.26. The Eu Universal Active Filter. (Photo courtesy of Eu Systems, Inc. Used by permission.)

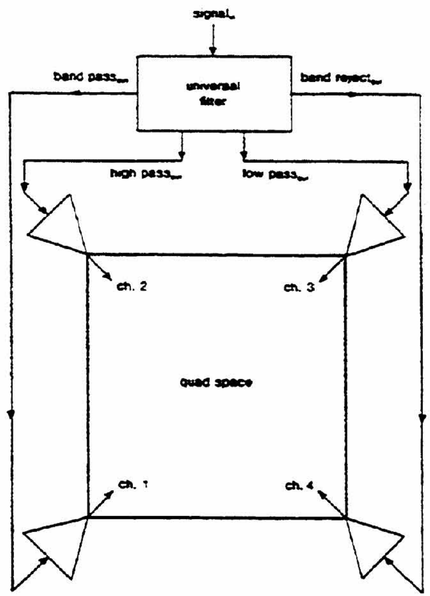

Figure 9.27. Spectral distribution in a quad space

filter. Increase the Q so that an activated trigger produces a decaying sound from the filter. Note that the decay time can be adjusted by raising and lowering the Q value. This patch is usually built into a multimode filter, often referred to as "keyboard percussion." A switch will connect the keyboard trigger to the filter input, therefore the need for external patching is eliminated. Instruments with this option will probably have two Q controls–"Q" and "final Q." These two Q controls are used to control the envelope of the rung filter. The produced sound is an exponentially decaying sinewave. A single Q control determines the length of the decay. Two Q controls make it possible to replicate the "initial" and "final" decay (or "release") of the envelope, as with the ADSR. The process is a bit complicated but should be understood in order to maximize the possible applications of the patch. The keyboard trigger supplies the filter with a sharp transient to cause the ringing, and the keyboard gate, also patched in with the same "percussion" switch, determines which Q control is in effect. If the gate is high (key depressed) the "Q" pot controls what will be the initial decay. As the gate goes low (key released) the Q control is given to the "final Q" pot, and this setting determines the degree of the final decay. This process is illustrated in figure 9.28. If the "keyboard percussion" switch is off, the final Q control is ineffective. This patch need not be limited to simple decaying sinewaves. Try simultaneously filtering a sound and imposing the filter ringing effect over it.

The multimode filter can also be useful in producing "formants." A formant can be described as a favorite frequency or spectral area of an instrument, acoustic space or circuit. Whenever any signal's spectrum contains a space or circuit's formant frequency, that part of the spectrum will be boosted. Equalizers are usually used to compensate for a room's formant(s) by attenuating that particular part of the spectrum. A formant filter, or a multimode filter used the right way, can simulate these formats to provide a more lively sound—if that's what you want. The technique is as follows: mix the high, low, and band-pass outputs of the filter in equal proportions. The result so far will seem redundant because high-pass plus low-pass plus band-pass equal the original signal. But now Q can be added and the various output passbands can be attenuated to produce some rather unique response curves.

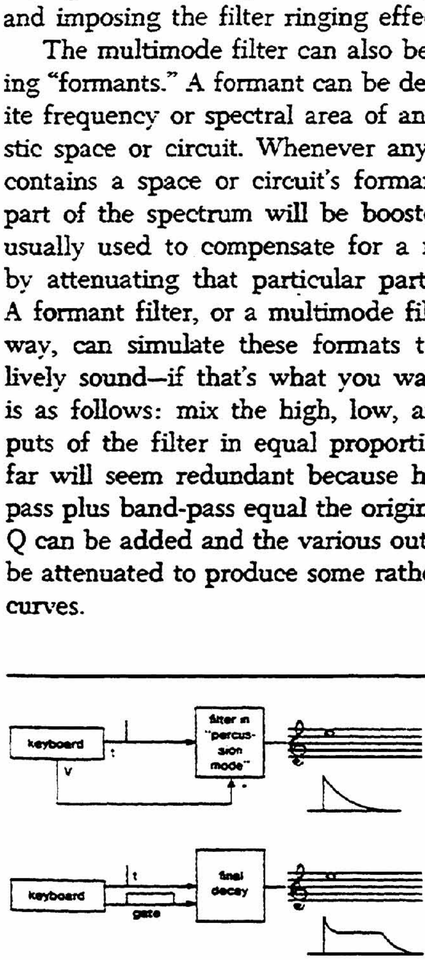

*The frequency of the "ring" is determined by the filter's frequency offset so it would be logical to control it with the keyboard voltage.

Figure 9.28. Filter ringing. This is not possible with all filters. If your system is capable of this technique it will probably be explained in your manual.

Aspects of Voltage Controlled Filters

The applications of filters in electronic music are so vast and varied that they could almost comprise a methodology separate from the other techniques of electronic music. Filter techniques, however, share a common structuring technique with other parameters of electronic in terms of voltage control. Just as control voltages can be used to structure the pitch, loudness, and timing of electronic instruments, timbre and voicing can be structured with voltage control of a filter's center or cut-off frequency, bandwidth, and where applicable, Q. The process of voltage control is well understood at this point, and various voltage control filter (VCF) applications have been previously dealt with as needed. VCF control with keyboards, sequencers, sample/holds, envelope generators, etc., can easily be experimented with by keeping in mind which parameter is being controlled. In the event that your resources do not provide voltage controlled Q, you can use the patch illustrated in figure 9.30. This is an expansion on the Q patch illustrated in figure 9.21. To voltage control the Q all that is needed is to voltage control the gain of the feedback leg by insertion of a VCA in the signal patch. This makes it possible to correlate Q with any other voltage controlled parameter such as center frequency, the pitch of the filtered signal, envelope shape, note duration, rhythm, etc.

Once the cut-off frequency has been established, either by manual setting or by application of a DC voltage, an AC control voltage may be applied to modulate the cut-off frequency in accordance with the applied waveshape. The ratio of the control voltage to the cut-off frequency displacement varies with different systems. As a hypothetical example, suppose that an arbitrary ratio of 1 volt of applied voltage will produce 1 octave displacement of the center frequency. (This is in an exponential mode.) Therefore, a square wave control voltage with an amplitude of 1 volt, as applied to a low-pass filter with a 440 Hz cut-off frequency, would abruptly shift the cut-off frequency one octave in each direction once every cycle, as shown in figure 9.31A. If the control voltage was dropped to 1/2 volt the rate of modulation would be the same but the displacement about the center frequency would

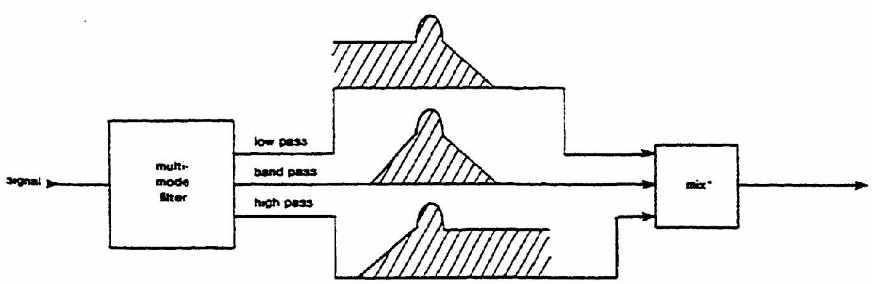

*A true formant filter will have this mixing stage built into the circuit.

Figure 9.29. Formant filtering

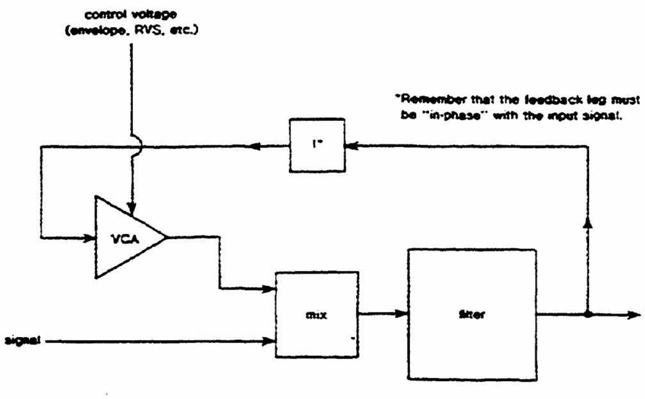

Figure 9.30. Simulation of voltage controlled Q

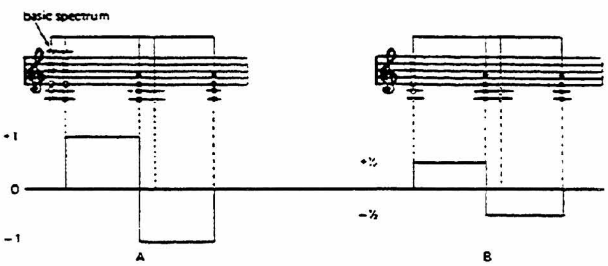

Figure 9.31. Voltage control of a filter with a square wave

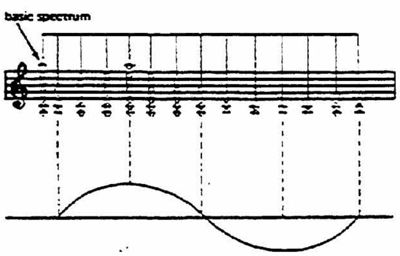

Figure 9.32. Voltage control of a filter with a sine wave

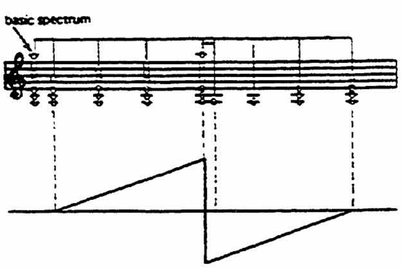

Figure 9.33. Voltage control of a filter with a ramp wave

only be 1/2 octave (figure 9.31B). By using a sine wave program signal, the effect would be a glissando back and forth about the center frequency (figure 9.32). A ramp wave program would produce an upward glissando to a point determined by its voltage, an abrupt shift to a point opposite the center frequency, followed by a glissando back up to the center frequency (figure 9.33). If the control voltages were below the audio range, the ear could possibly distinguish between each of the spectral components as the cut-off frequency moves higher and lower according to the program signal. An approximation of musical notation of this effect is given with each example. As the program frequency approaches the audio range, the ear will begin to hear sidebands produced by the rapid modulation. As explained before, this is a combination of phase modulation caused by the modulation of the cut-off frequency and amplitude modulation caused by the fact that the slope of the filter is continually moving, causing crescendi and diminuendi as it affects various parts of the spectrum.

Voltage control of a high-pass filter works the same way, except that the inverse patterns would be produced, as shown in figure 9.34.

Band-pass and band-reject filters are also subject to voltage control, but in this case there are usually two voltage controllable parameters—center frequency and band-width. If a band-pass filter is thought of as a high- and low-pass filter connected in series, it is very easy to understand how both center frequency and band-width can be subjected to voltage control. By applying the same program voltage to both filters simultaneously, the cut-off frequencies will be shifted in an exponential manner, keeping the band-width between them the same. As a hypothetical example, suppose that the center frequency was 24 Hz with a half-octave slope on each side. This means that the cut-off for the high-pass filter would be 16 Hz and the cut-off for the low-pass filter would be 32 Hz. The ratio represented by this band-width is 16:32, or 1:2. By keeping this 1:2 ratio constant, there will always be a half-octave slope on either side of the center fre-

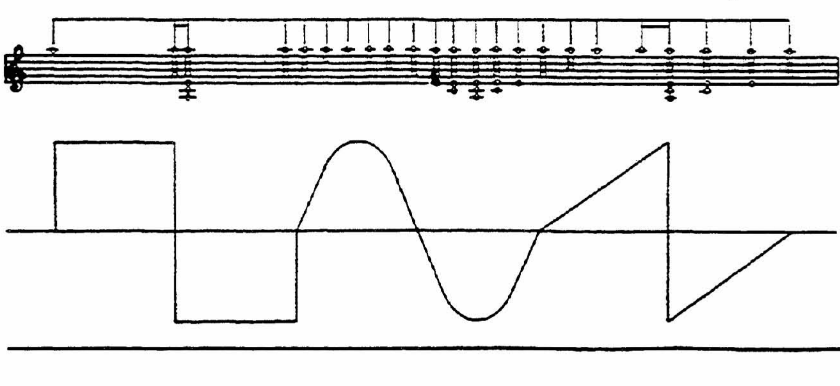

Figure 9.34. Voltage control of a high-pass filter

quency. If the center frequency is 440 Hz, the high-pass cut-off would be 330 Hz and the low-pass cut-off would be 660 Hz (330:660 = 1:2). Since a band-reject filter is essentially a high- and low-pass filter connected in parallel, the treatment is the same except that the center frequency now refers to the point of maximum attenuation. In both cases the application of a control voltage is the same—a higher voltage will result in a wider shift in the center frequency, while the waveshape determines in what manner the frequency will move.

By routing white sound through a voltage-controlled band-pass filter, it would be possible to "play" various sound bands by varying the control voltage with a keyboard or sequencer (figure 9.35). Even more of a pitch effect could be produced if the filter were resonant. The same treatment with a band-reject filter would allow the composer to play "holes" in white sound or in a complex spectrum (figure 9.36).

By voltage-controlling the center frequency, it is also possible to track any portion of another voltage-controlled sound. If the following sequence of timbres were being produced by ring modulating (or any other type of modulation) two constant-ratio frequencies, any constant portion of each successive timbre could be continually passed or rejected in the following manner. (See figure 9.37.) Set the band-pass or band-reject filter to affect whatever portion of the first timbre is desired, and then use the same voltage being used to control the oscillators, which in this case is a sequence of nonfluctuating DC voltages, to control also the center frequency of the filter. As the DC control voltage shifts the oscillators, it will also shift the center frequency of the filter, resulting in similar timbres no matter what range of frequencies are being produced by the modulation (figure 9.37).

The band-width of a band-pass or band reject filter can be controlled by varying the ratio between the high and low cut-off frequencies of series and parallel high- and low-pass filters. In the earlier example, a center frequency of 440 Hz with a half-octave slope on each side represented a 1:2 ratio. If the high-pass cut-off is raised from 330 Hz to 395 Hz, and the low-pass is lowered from 660 Hz to 550 Hz, the center frequency would remain the same but the band-width would have narowed to a ratio of approximately 3:2. This process can be voltage-controlled by exponentially moving each cut-off frequency for the high- and low-pass filters the same interval toward or away from the center frequency, depending on whether it is desired to narrow or widen the band-width. An application of a DC voltage would change the ratio according to the preset voltage. If the preset ratio is established with an X volt DC level, an application of a negative

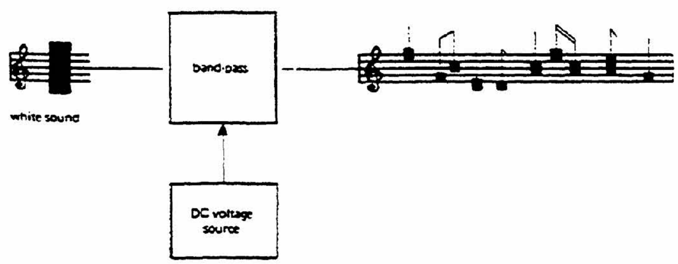

Figure 9.35. Voltage control of a band-pass filter

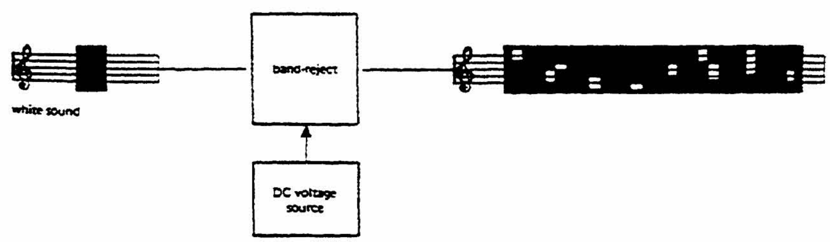

Figure 9.36. Voltage control of a band-reject filter

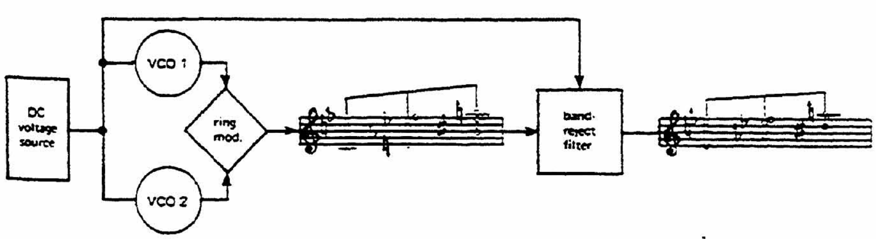

Figure 9.37. Constant timbre production with voltage-controlled filters

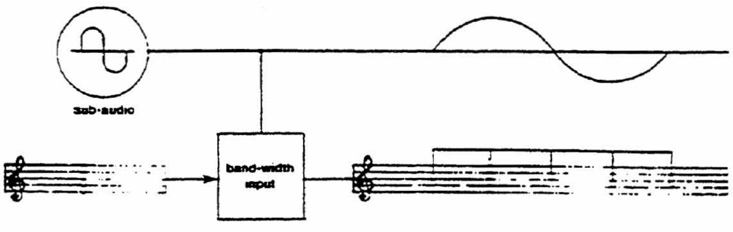

Figure 9.38. Modulation of band width

X DC voltage would make the ratio larger, thereby widening the band-width. Conversely, an application of a positive X DC voltage would make the band-width narrower. By using an AC program voltage, the band-width would change in accordance with the positive and negative changes in the program voltage (figure 9.38).

Following the principles of voltage control, the amount of band-width modulation depends on the intensity of the program signal, with the modulation rate a function of the program frequency. It should also be pointed out that band-width and center frequency are independent functions and can be controlled by two separate control voltages. This means that it is possible to raise or lower the center frequency while widening or narrowing the band-width. By applying the *same* control voltage to both functions, it is possible to raise or lower the center frequency in direct proportion to the modulation of the band-width. By routing one of the control-voltage lines through a voltage inverter it would be possible to vary the center frequency and band-width in inverse proportions.

Since the initial musique concrete experiments of Pierre Schaeffer, the filter has become one of the most widely utilized devices of the electronic music composer. As new methods of sound modification were developed, more effective methods of design enabled the filter to hold its place as one of the composer's most useful tools. The whole concept of subtractive synthesis makes it irreplaceable in the electronic music studio. More recent voltage-control designs have opened an entire new realm for filter applications. Techniques of formant and timbre modulation are still in their infant stages and their full potentials in terms of sound modification have yet to be realized. In conjunction with various other modules and voltage sources, the filter affords the composer an endless number of sound-modification techniques.

Patches and Projects

The following patches are only beginning points for further exploration of filtering techniques. Some patches exemplify how various filter parameters can be correlated with other ongoing controls in an instrument, and other configurations suggest filter applications outside of the normal spectral control. Work through each patch as your resources allow, then try to incorporate various filters in the patches suggested in previous chapters.

Figure 9.39 Dynamic Bandwidth. A rich non-harmonic spectrum is produced by a ring or balanced modulator and patched through a bandpass filter. The VCO controller, a keyboard, sequencer, random voltage source, etc., simultaneously drives the filter so that the center frequency is at the same relative spot in the spectrum and this can be adjusted as desired. The patch will be most effective if the filter's center frequency corresponds to the center of the modulation spectrum. Offset the filter for a minimum bandwidth and control it with an envelope generator. When the EG is triggered the bandwidth will open to maximum (if the EG voltage is not attenuated) and return to minimum as the envelope decays. This is most effective when the transient bandwidth occurs simultaneous with a change of spectrum so that a keyboard controller might be best to start with. If a VCA is used for final amplitude control, make sure that its controlling envelope is longer than the envelope controlling the bandwidth.

Figure 9.40 Inverted Spectral Sweeps. This is an interesting patch to use with a pre-amplified acoustic sound such as a piano. The signal is split and taken to two low-pass filters. An envelope detector is used to generate a timing pulse to fire an envelope generator. The EG's voltage is patched directly to the center frequency control of one filter and simultaneously patched through an invertor before being connected to the cut-off control of the other filter. With an attack from the instrument the trigger fires the EG, driving the center frequency of filter 1 up and simultaneously driving the cut-off of filter 2 down. The two opposing spectral sweeps are mixed to a single output channel. This simulates band-reject filtering, but by playing with different Q relationships some interesting phasing effects can be done due to the phase shift in each filter. If you don't have two bandpass filters use whatever filters are available and see what you can do with the patch.

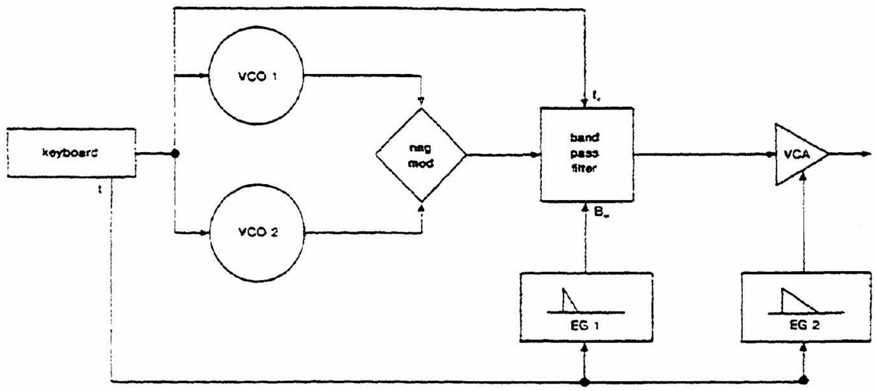

Figure 9.39. Dynamic band width

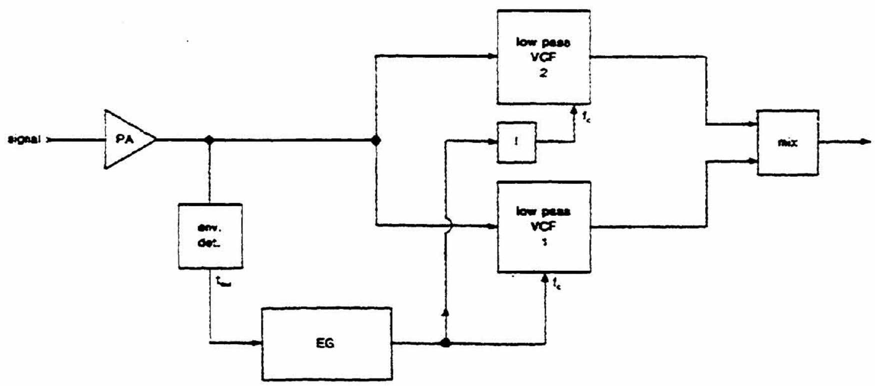

Figure 9.40. Inverted spectral sweeps

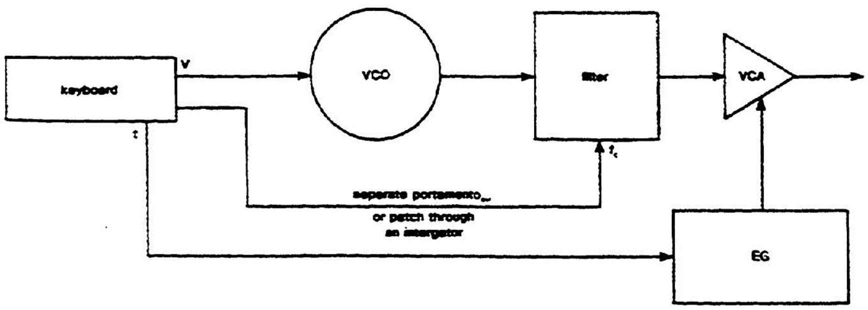

Figure 9.41. Spectral glissandi

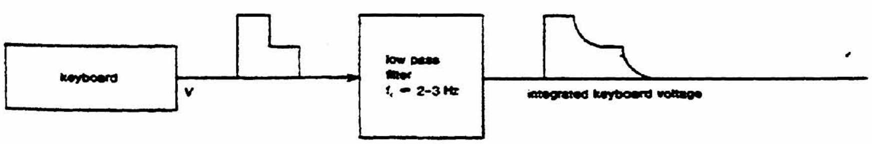

Figure 9.42. Low-pass filter as an integrator

Figure 9.41—Spectral Glissandi. This patch involves tracking a VCO and any type of available filter in parallel. Discrete pitch choices are made by keyboard control, and a separate portamento output is used to drive the filter. If the keyboard does not have a separate portamento output, patch a leg of the keyboard voltage through an integrator.

Figure 9.42—A Low-pass Filter as an Integrator. If your instrument does not have a dedicated integrator an integration process can be accomplished with a low-pass filter if it will accept a sub-audio DC voltage as an input signal. Filters are, of course, designed to process audio frequencies, but the typical circuits used in low-pass filters affect a slew on sub-audio frequencies. Patch a keyboard voltage through a low-pass filter and set the center frequency around 3 to 5 Hz. Now patch the filter output to a VCO, and the keyboard voltage will have an exponential portamento. The portamento rate can be varied by changing the cut-off frequency. By voltage controlling the cut-off frequency you have the added feature of voltage controlled integration. Using this technique requires that

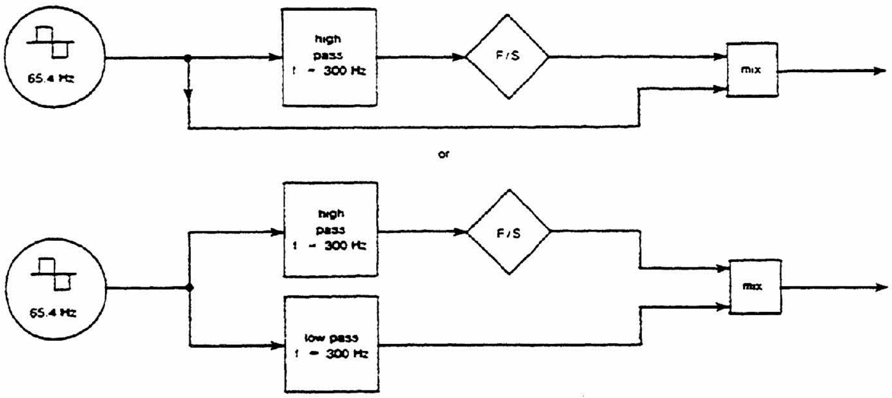

Figure 9.43. Selective spectral shifts

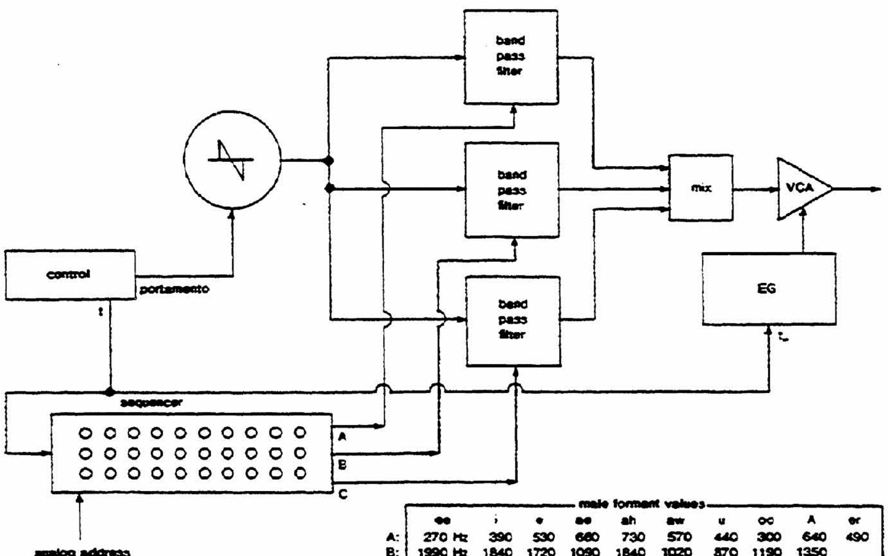

male formant values

	ee	i	e	ae	ah	aw	u	oo	A	er
A:	270 Hz	390	530	660	730	570	440	300	640	490
B:	1990 Hz	1840	1720	1090	1840	1020	870	1190	1350	
C:	3010 Hz	2550	2480	2410	2440	2410	2240	2240	2390	1690

each sequencer bank is tuned to produce these center frequencies

Figure 9.44. Simulated vowel formants

Q be kept at minimum, since a high Q may de-tune the keyboard. But of course such de-tuning may be just what the musician ordered!

Figure 9.43—Selective Spectral Shifts. A filter and a frequency shifter may be used to de-tune only selected portions of a spectrum. In this patch a low C squarewave is patched to a highpass filter which hypothetically passes everything above the fifth partial. The filter output is then patched to a frequency shifter which up-shifts that part of the spectrum. It may then be re-mixed with the original spectrum so that the shifted harmonics (which are no longer "harmonic") clash with the up-shifted part of the original spectrum. A more subtle approach is to use a parallel lowpass filter set at the same cut-off frequency before this mixer to remove the part of the spectrum processed by the frequency shifter. The final mix will have the harmonic/enharmonic clash but will be a slight shift of just the upper partials, much like a steel drum.

This patch can be used successfully with acoustic signals and may be adapted to practically any filter process.

Figure 9.44—Simulated Vowel Formants. The vowel sounds used in human speech are produced by a buzz source (the vocal chords) being processed by five different formant areas in the vocal tract. As explained earlier a formant is a resident resonance area, and in the speech process these formants are controlled by the various throat, mouth, and tongue positions. If a complex waveshape is passed through these resonance areas each corresponding area of the spectrum will be boosted. This process may be simulated with moderate success by using a sawtooth VCO and three bandpass or formant filters. Each filter is tuned to one of the three formant areas for each sound. For example, the "ee" is produced by tuning the first filter to 270 Hz, the second to 1990 Hz and the third to 3010 Hz. The most effective settings would be a moderately wide bandwidth and a high Q to simulate the formant. Do

not, however, get the Q so high that the filter goes into oscillation. When a rich sound is passed through these filters in parallel and remixed to a single line the "ee" should sound, independent of the pitch of the VCO. These vowel sounds will be even more realistic as they pass from one set of formants to another, as in pronouncing "ae"- "i"- "ah"- "oo" and so on. At this point we have to consider control. We know what we have to do but now must figure out a way to do it. The problem is to get access to three parallel controls, one for each filter (note that the formant regions do not move in parallel). The obvious answer is a three bank sequencer. This will work satisfactorily as long as we are satisfied with sequential address, that is, calling up each set of formant in a specific repetitive order. In order to skip around from vowel to vowel we might try to create some sort of artificial speech. For this we may consider a sequencer with analog address (see page 73). Then a keyboard could be used to select whatever vowel is desired at any time. Another control possibility would be a keyboard with three independent tunable voltages for each key, which would, of course, relicates a key addressed sequencer. Perhaps the most efficient method would be a micro-processor based analog synthesizer in which the formant voltages could be stored in digital form and called up as needed. Control of the pitch source is still another matter. People do not usually speak in discrete pitches, but rather each sound has a slight glissando within and around it. This can be done with a portamento keyboard or a joystick. My own preference for this patch is a joystick so I am not locked into 12-tone equal temperament speaking! A further expansion is to integrate the formants so that the vowels slide into and out of each other. At some point this instrument becomes rather academic for the resources of most instruments, but is worth experimenting with. If you have only two filters, use the first two formants. The effect will not be as "human" but the instruments are not human either. If analog address is not possible tune up an interesting sequence and clock through it with the trigger from the keyboard used to control the VCO. Try some random formant by controlling a couple of filters with random voltage sources. Instead of using a single VCO, try formant filter of some complex non-harmonic modulation spectra. An entire composition could be based around some artificial language created by such a patch. More will be said about spectral replication when discussing vocoders in chapter 14.

Figure 9.45—Whistle Patch. This patch was kindly supplied by Japanese composer Isao Tomita and was originally designed for a Moog instrument. The instrument has been re-notated here as flow-chart format for the convenience of the general reader. The basis of the patch is a white noise source passed through a high Q low-pass filter. The various levels of control are quite interesting and deserve a detailed analysis. The filter is offset in the middle of its low range and this offset defines the lowest "whistle pitch." Pitch center is achieved by having the filter at maximum Q without going into oscillation. The filter is then voltage controlled by two voltage sources: a keyboard determines discrete pitch reference, and a mixed 5 Hz LFO and envelope generator (ADSR format) provide

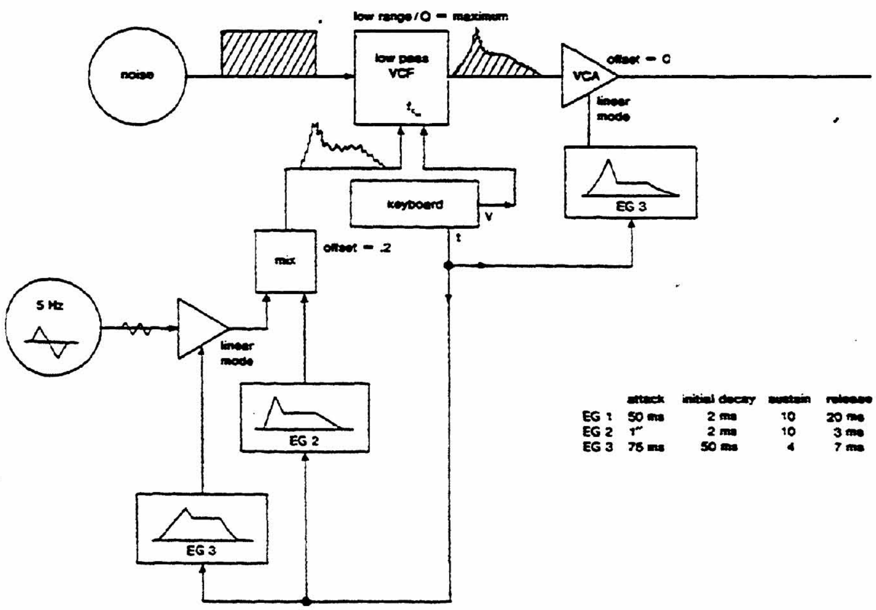

Figure 9.45. "Whistle patch" designed by Isao Tomita

a transient sweep of the whistle pitch. EG 1, trigger by the keyboard, generates the defined envelope and a second EG controls the gain of a VCA, which in turn shapes the amplitude of the LFO triangle wave. Note in figure 9.45 that the mixer has a gain offset of .2 (on a scale of 0 to 1 but the mixed triangle wave and EG 2 contour will not affect the filter until both EGs are triggered. When this happens the filter will change to a new cut-off frequency as determined by the keyboard and will also have a transient sweep as pictured by the voltage function at the mixer output. The overall gain is determined by VCA 1, which is controlled by a third EG, also triggered by the keyboard.

Figure 9.46—Cut-off/Filter Q Correlation. A common problem with high Q filtering is that the filter may distort if there is too much energy in the part of the spectrum being filtered. This is most annoying when the cut-off or center frequency sweeps through the fundamental of a waveshape. The technique for having the most efficient Q without distortion for all cut-off frequencies is to have voltage controlled Q, which is available on some filters. Offset the Q to minimum and control it with the same voltage which is controlling the filter's center frequency. Set the cut-off or center frequency at the fundamental frequency of the VCO and adjust the Q offset to a point where you obtain maximum Q without distortion. Then use the voltage which controls the filter's center frequency and use it also to control Q. As the center frequency gets higher the Q factor will increase. As the center frequency comes back down and approaches the fundamental, the Q correspondingly moves lower and distortion is avoided. If your instrument does not provide voltage controlled Q it may be externally patched, as was suggested in figure 9.30. The gain of the VCA controlling the feedback signal can be controlled by the same function controlling the filter frequency as illustrated in figure 9.46A. Perhaps a simpler approach with a bandpass filter is to correlate bandwidth with center frequency (figure 9.46B). In band-pass filters Q and bandwidth are essentially the same thing so that if they can be inversely related, higher center frequencies having a smaller bandwidth, the distortion problem can be avoided. Even if your filter is designed not to distort, voltage controlled Q can be used as an expressive variable in many filter patches. The next three instruments are taken from ARP 2600, PAIA and Roland 100 System patch books. Each uses filter(s) in various ways; each patch has been reproduced here both in its original form and in flowchart format for adaption to other instruments.

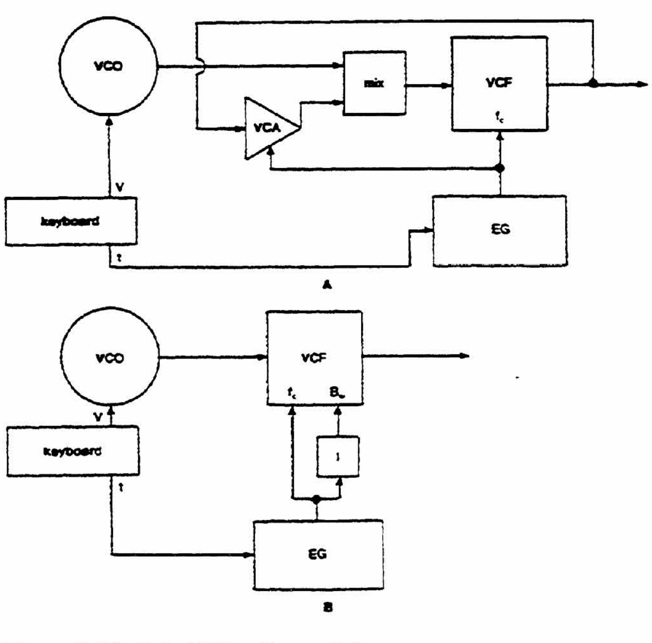

Figure 9.46. Cut-off/filter Q correlation

Figure 9.47—"Steel Drum Corps"—ARP 2600 Patch Book Patch #49. This instrument combines low-pass filter oscillation and audio rate filter modulation. A stepped random voltage is produced by sampling low noise; and this may be replaced by a triggered RVS if needed. This random voltage and a 16 Hz square-wave are mixed to frequency modulate a 900 Hz sine-wave. The VCO is given discrete pitch information from a keyboard. This rather complex signal is then patched to a voltage controlled low-pass filter which has its Q at maximum so that the circuit will oscillate. The pitch of the oscillation will be somewhere above 100 Hz (the offset of the VCF), as determined by the various voltage "levels" of the program VCO. To clarify this, think of the oscillating filter as a voltage controlled oscillator, which is precisely its purpose in this patch. Reviewing FM, the displacement from the center carrier frequency depends on the magnitude of the program voltage and the index, which in this case is the attenuate level of VCO 2 where it is patched into the filter control. It should be stressed that this VCO is not an audio source being filtered, but rather is acting as a control for the fitler cut-off. The final gain of the sound is determined by the VCA which involves some nice control correlations. The envelope for the sound is being provided by which is triggered by the Sample/Hold Clock. Therefore the rhythm is determined by this clock and it is performer variable (perhaps consider voltage controlling it with something!). Each time a new random voltage is generated it is summed with the ADSR voltage to control the VCA. Therefore this continually changing voltage is in effect, causing random offsets; but the ADSR supplies a constant envelope. The reverb is added for a "touch of class," but may be eliminated if desired.

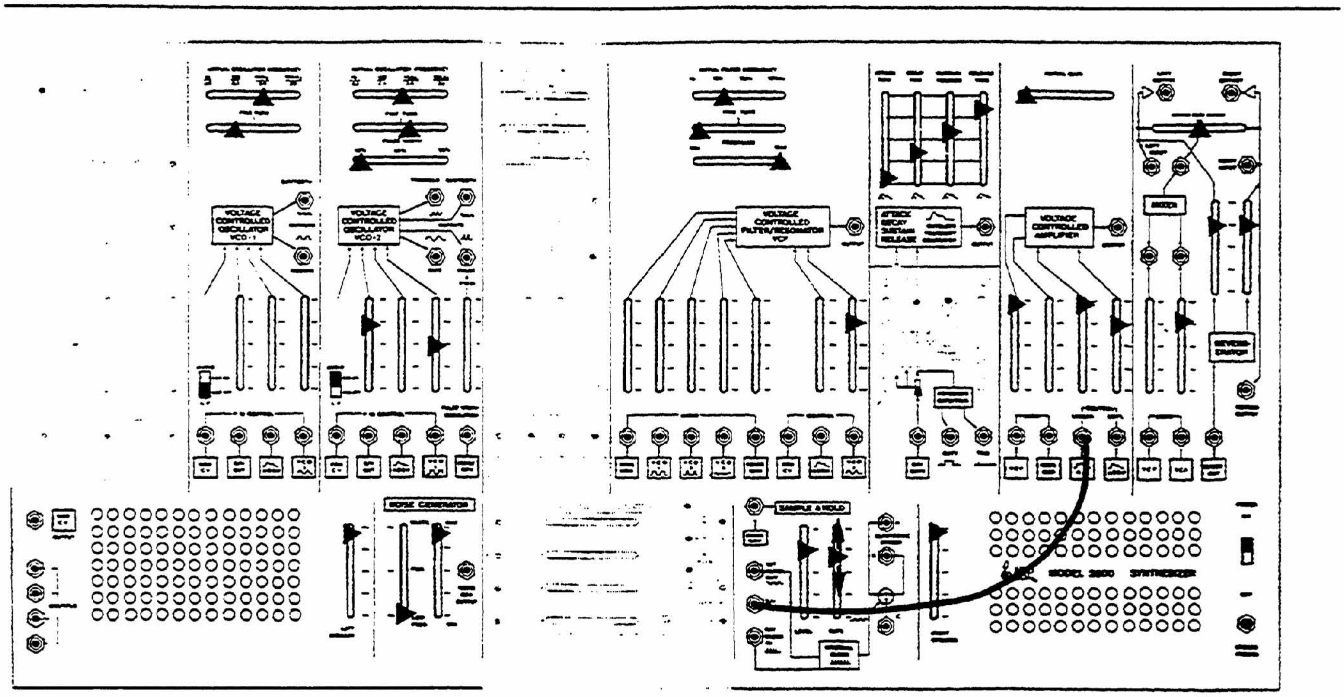

Adjust S/H Rate for tempo.
Play up and down keyboard for different metallic effects.

1 PATCHCORD

Steel Drum Corps **42.**

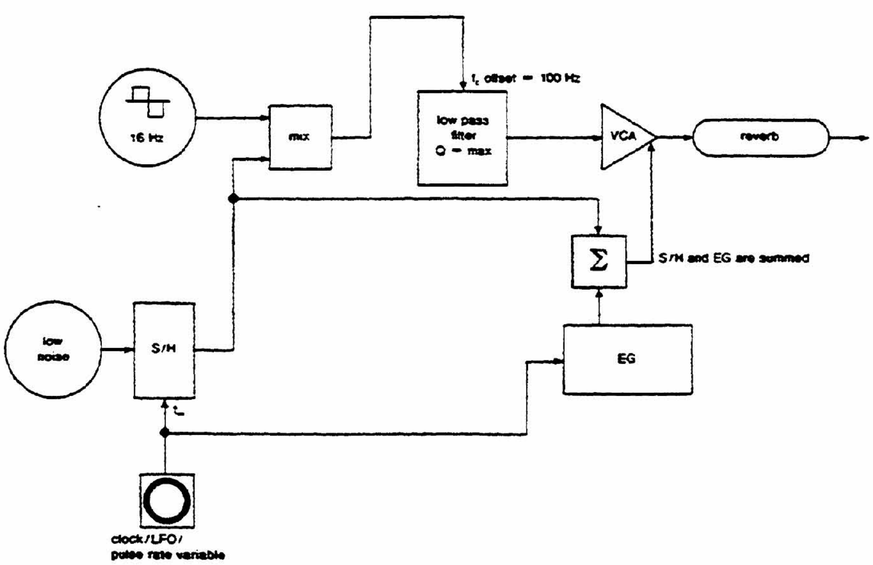

Figure 9.47. "Steel Drum Corps" from Arp 2600 Patch Book. Used by permission.

The complexity of the patch can be clarified by distinguishing between the two modulated parameters. The VCA is being frequency modulated at a constant rate of 16 Hz. If you listened to the VCO output directly it would sound as a rapid trill due to the waveshape of the program oscillator, a squarewave. The discrete reference pitch for the trill is being supplied by the stepped random voltage from the S/H. So far we have a 16 Hz trill at random pitches, and the pitch changes every time the S/H clock supplies a trigger. This trilled sinewave from the VCO is in essence frequency modulating another sinewave VCO, which is really an oscillating filter so that the filter generates complex frequency/phase modulation spectra. The same trigger fires an ADSR, therefore each new envelope has a new spectrum. Why go to all the trouble of frequency modulating an oscillating filter when you could FM another VCO? The ARP 2600 has only one sinewave VCO, and the patch requires two (the oscillating filter being the second). The musician must then call on his "defeat-the-system" talents and improvise something else to do the oscillating. A second and less major aspect of the patch is that filter incorporates phase modulation which adds a slightly different coloration to the sound.

Figure 9.48—"Heavy Metal Pogo Sticks" by Bruce Goren from Polyphony Magazine designed for PAIA instruments. This patch uses a low-pass filter and reverb to shape the spectrum of one input to a ring modulator. The patch is self explanatory, but the important feature is the dual effect the filter has on the final modulation spectrum. The filter input is a squarewave being frequency modulated at about 3 Hz, therefore the spectrum is not especially complex. The filter then removes the upper harmonics of the waveshape in accordance with the decay functions of the ADSR. The upper partials of a squarewave are quite strong in relation to other classic waveforms, and hence this transient filtering process affects both spectrum and gain, which in turn contribute to the final ring modulation product.

Figure 9.49—"GONG"—Roland 101/102 Patch Book. This instrument uses parallel low-pass filters, one of which processes a ring modulation spectrum, while the other processes a triangle wave, which is also one of the RM inputs. The Roland 101/102 is in essence a keyboard instrument with a pre-packaged set of additional modules. The flowchart version of this patch has been slightly re-designed, eliminating one VCA and one ADSR. The original patch also contains a printing error which indicates patching the keyboard voltage to a gate input and visa versa. The VCOs are tracked in parallel by the keyboard and are tuned to a perfect fourth, a 4:3 ratio. The ring modulator then produces a 1:7 (a fundamental and compound seventh: $4 + 3 = 7$ and $4 - 3 = 1$) for every frequency component in the waveshapes. More enharmonicity is added by the low index FM on the top VCO as it brings it in and out of tune with the other VCO. This roughly replicates the "beating" effect we hear in large gongs. This complex sound is patch to a low-pass filter which is also modulated by the same low frequency sine wave. The gong's strike tone is supplied by mixing a filtered version of the lower triangle wave with the modulation spectrum. A unaltered triangle wave would be too rich in harmonics, hence it is filtered at a constant cut-off frequency by tracking the filter in parallel with the VCO from the keyboard. Note also that a homogeneous timbre is achieved by having minimum Q. Even a moderately high Q would amplify various partials and disturb the mellowness of the desired sound.

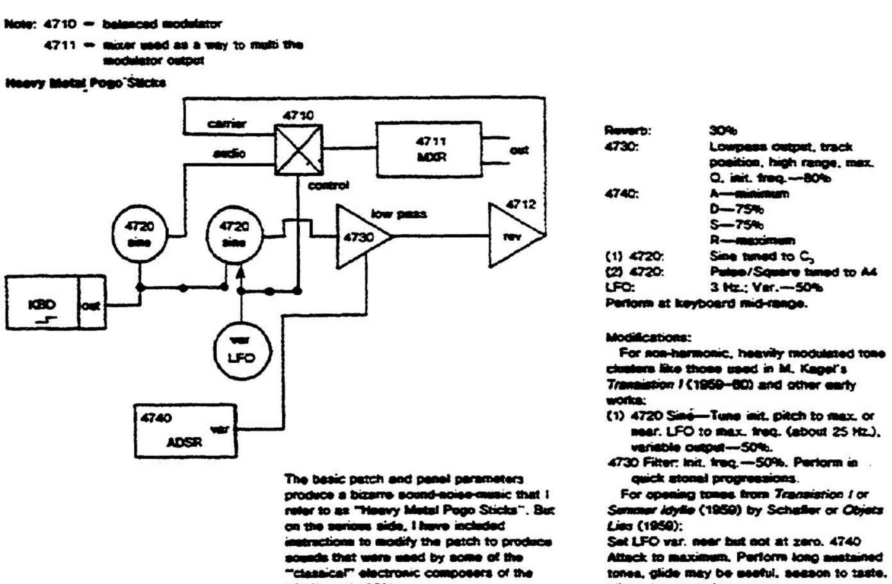

Figure 9.48. "Heavy Metal Pogo Sticks" (From *Polyphony Magazine*, Vol. 3, No. 2, Polyphony Publishing. Designed by Bruce Goren.)

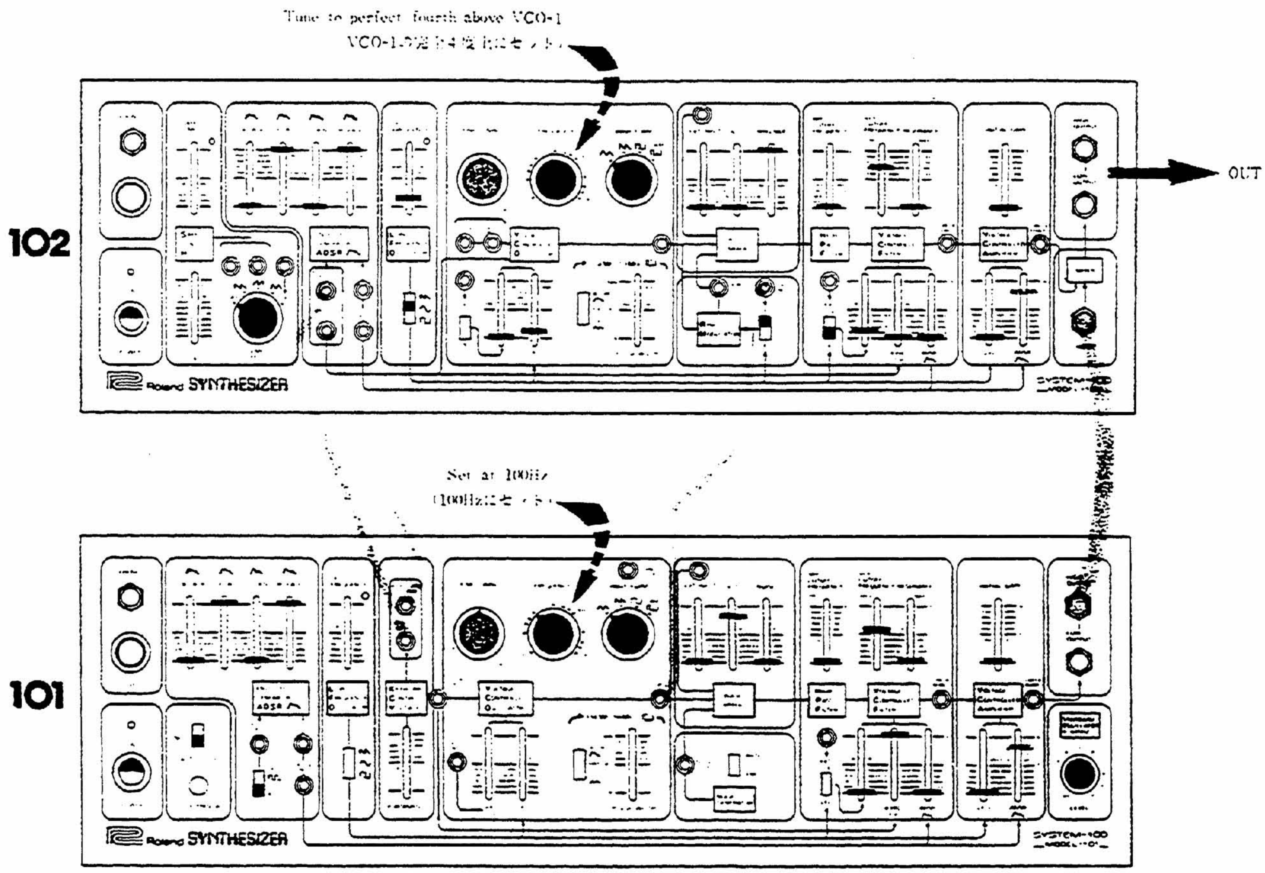

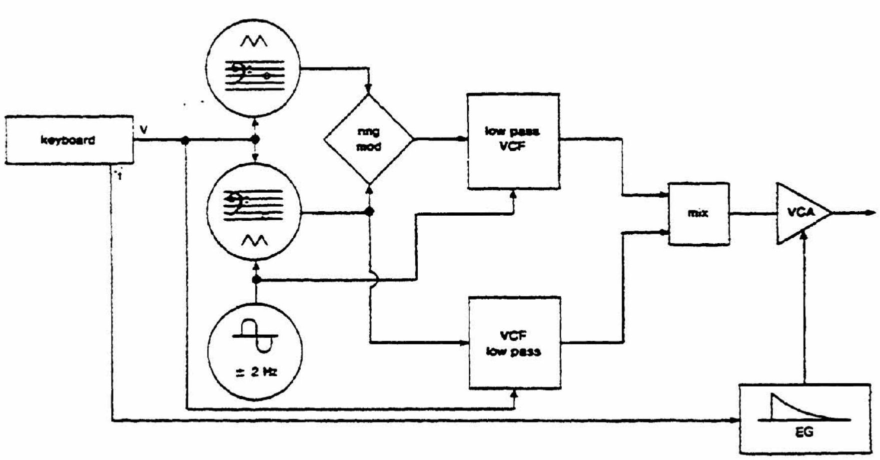

Figure 9.49. "Gong" (From the Roland System 100/Expander 102 Patchbook, Roland Corp. Used by permission.)

10 Magnetic Tape Recording

The creation of any music is a process by which an idea goes through many stages of energy exchange before becoming the final aesthetic object. The composer of an acoustic work begins with an idea, changes that idea into a sonic concept, and subjects that concept to notation (usually). The performer works backward through that process by reading the notation and translating the symbols into physical actions. The instrument responds to the actions, some instruments responding better or worse than others, generating what the composer envisions as the sonic concept, and the audience finally hears the music in the hope of comprehending the composer's idea. Each of these stages takes its toll of the original idea, as any exchange of energy involves a loss of something. Composing, at least in terms of our traditions, involves two skills or talents: the first is the ability to conceive fresh ideas, and the second is to have the technique to move these ideas through each stage with maximum efficiency. A proficient performer is one who possesses the technical and intellectual ability to put back into the music any of the aesthetic information which may have been lost during the chain of creation. Music composed especially for the recorded medium offers at least two advantages to the composer: first, it can eliminate some of the stages so that the composer can go from idea to sonic design to instrument to the audience, here the score stage is sometimes eliminated, depending on how you wish to work; the second and most significant advantage of tape composition is that it places the composer "out of time" in producing what will be the performance. The live performer cannot go back in time and make corrections but the composer in the tape medium can. He has the opportunity to preview his "performance," he can rework the aesthetic and sonic concepts, then he can record and/or edit as many versions as are needed to satisfy him. Besides the basic ability to get the ideas, the major skill of the composer of tape music is adequate performance techniques in the studio, both with the electronic instruments and with the tape recorder. Many unique ideas and good musical performances have been lost in poor recordings. Many times we are at the mercy of the equipment; it could be a poorly maintained recording system or even an inadequate monitor system. A bad monitor system will add its own colorations to the sound. In this case a better sound system in a good performance space will reproduce the music in a manner quite different than was heard in the studio. A studio system should be as *flat* or transparent as possible. This means the entire audio range is produced and reproduced with the same accuracy. Studio equalizers can tune up a studio, and a good set of equalizers for concert reproduction will make for a happier composer.

It is beyond the scope of this text to deal with all the techniques of studio and concert acoustics, tape and studio maintenance, or all of the details of the *art* of recording. This chapter will provide the basics of magnetic tape recording in the studio, with some suggestions on the craft of tape editing. It is a good idea to approach the tape recorder in the same manner as any other instrument; it can be a means of expression but its use takes practice.

Equalizing Standards

Any recorded or electronically reproduced sound is subjected to a certain amount of high and low frequency loss. While higher frequencies are usually the most readily audible, they also have shorter wavelengths and the least amount of energy content. Both high and low frequency loss can be compensated for with special equalizing circuits. In order to better reproduce higher frequencies, they must be recorded at a higher level than the lower frequencies. The easiest way to do this is to attenuate the lower frequencies, then adjust the overall gain of the amplifier to bring these low frequencies back up to their original level. The overall effect is then an amplification or boost of the higher frequencies, while the lower ones are reproduced at their original level. When equalization is used in a recording circuit it is referred to as "pre-equalization." If the equalization circuit is utilized in the playback stage, it is called "post-equalization." Effective reproduction is usually a combination of pre- and post-equalization. If certain frequencies are recorded at a higher than usual level, transmitted by disc, tape, broadcasting, etc., and then attenuated during the reproduction stage, the result would presumably be a faithful copy of the original. This approach

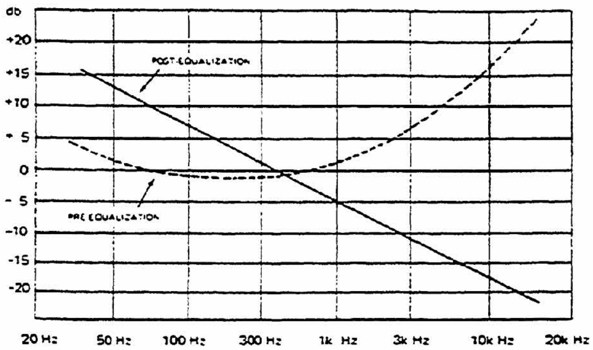

Figure 10.1. Pre- and post-equalization curves

to equalization will only be effective, however, if there is some sort of standard by which signals can be recorded and reproduced. By using a standard pre-equalization curve and an inverse post-equalization curve, the two curves would balance each other out and the result would be "flat" or accurate reproduction.

At the present time there are three different equalization standards in use: those of the Record Industry Association of America (RIAA), the National Association of Broadcasters (NAB), and the Audio Engineering Society (AES). In dealing with tape recording and reproduction, the NAB curve is the most widely used. A professional-quality pre-amplifier should have the capability of being switched to any one of these standards, depending on the curve used in recording.

Magnetic Tape

Magnetic recording tape is a ribbon of acetate, polyester, mylar, or polyvinyl chloride (PVC) on which is bonded a very thin and even coating of minute magnetic particles or "domains." During the recording process these domains are aligned and realigned in various manners in response to the input to the tape recorder. During playback these imposed domain patterns induce an almost identical current, via the playback head, which is eventually perceived as a reproduction of the original input signal. Since there is a transfer of power from the sound source to the recording circuit to the tape, and from the tape to the playback circuit, the tape must be considered as one of the prime factors in the transduction/transformation process of creating an electronic composition. Thus, the choice of high-quality tape is just as important as the choice of high-quality equipment. In choosing tape there are several factors to consider. With most professional recording tape, one has the choice of either acetate or polyester backing. Professional tape must be resistant to physical changes under a variety of temperature and humidity conditions and it must also be able to withstand the stress of a great deal of handling. Tests conducted by 3M, Magnetic Products Division, have shown that temperature and humidity have far less of an effect on the expansion and contraction of polyestor tape than on acetate tape (see "Polyester and Acetate for Magnetic Recording Tape Backings," *Sound Talk*, vol. 2, no. 1, 1969). Tests also reveal that polyester withstands breakage under temperature and humidity variations better than acetate, but this is a bit misleading. Polyester, due to its ability to stretch almost 100 percent, can absorb sudden stress and is less likely to break. One of the major causes of tape breakage is sudden stops and starts of the tape deck with the feed and the take-up wheel and brakes out of adjustment. It is important to always use the same size feed and take-up reel and if there is a reel size switch for large and small reels be sure to use it. With polyester tape these suddent stresses stretch the tape a great deal before breakage. Once a tape has stretched beyond 5 percent, however, it is useless and very little can be done to salvage the signal which happens to be imprinted on the distorted portion. Acetate tape will break under much less stress and the elongation of the tape is usually not quite so critical. In many cases the break is very abrupt and a clean splice can be made without excessive distortion to the recorded signal. It is to be hoped that tape decks are always in good adjustment and the composer is always very careful in handling the tapes. Under these circumstances polyester is usually the preferred backing because of its ability better to withstand environmental changes during storage.

A second and very important consideration is tape thickness. Measured in mils, tape is available in 1/2-mil, 1-mil and 1 1/2-mil thicknesses. The advantage of thinner tape is that it is possible to store more tape on a reel, hence more recording time in the same amount of storage space. The disadvanages of thinner tape are (1) it is very difficult to handle and makes editing more of a major process than it already is, and (2) it contributes to the problem of "print-through" or "signal transfer." Print-through occurs when the magnetic flux on one layer of tape transfers its signal to the adjoining layers, resulting in the pre- and post-echo heard so often on commercial recordings. Although heat and long periods of storage contribute to this problem, a thinner tape will be more susceptible to print-through than a tape with a thicker backing. A preventative measure which can be taken against the effects of print-through is to keep the tapes stored in "tail-out" position—that is, with the beginning or "head" of the tape closest to the hub. (The tape must be re-wound before it is played.) This does not prevent print-through but any transfer that takes place will appear as a post-echo and will often be masked by the sound already on the tape. Another advantage of tail-out storage is that a more even and tighter winding is achieved if the tape is wound slowly, as it is when being played. Getting into the habit of storing tapes in this manner is no problem. It is just a choice of when you wish to rewind the tape, before or after playing. (Another good practice in tape preservation is to store master tapes in aluminum tins in a place of constant room temperature. This protects the tape from stray magnetic fields and excess humidity.)

A second processing device to be considered is the recording and playback head itself. With extended use a tape head will build up a collection of magnetic fields and a certain amount of dirt will be collected on it. For the best possible head performance, the composer should periodically de-magnetize and clean the record and playback heads, following the directions supplied by the manufacturer. Low-quality tape is also a consideration in head wear. A rough coating not only causes undue wear but also prevents consistent contact with the heads, resulting in a certain amount of distortion.

General Tape Recorder Operation

Recording at higher speeds passes more tape by the record head in the same amount of time as recording at a lower speed. Consequently, there is a higher signal-to-noise ratio and a higher frequency response. (Signal-to-noise ratio is an indication of level of the inherent tape noise in relation to the recorded signal. Professional recordings should have a SNR of between 56 and 60 db.) Most professional recording is done at a speed of 15 inches per second and almost never at speeds less than 7½ ips, unless it is intended to reproduce the recorded material at higher speeds. This, of course, means that greater amounts of tape must be sacrificed for purposes of quality and fidelity. Tape is available on reels ranging from 3 inches to 16 inches in diameter. Because of the need for longer recording time, along with high recording speeds, the studio machine should be able to accept at least a 10½-inch reel of tape. The 14-inch reel, although less common, is available if longer playing time is needed. In order to provide adustment in the tension arms for constant tape/head contact, a professional machine is usually equipped with a switch for varying tension according to reel size.

There are usually two different inputs to the tape recorder. A high-level 600-ohm line input and a low-level input usually used for microphones. Depending on the type of microphone being used, low-level inputs should be able to accommodate both high impedance (5k- to 50k-ohm) and low-impedance (50-250-ohm) microphones. Professional machines usually have separate gain controls for the line and microphone input. Referred to as "mike-line mixing," this allows mixing and simultaneous recording from both an electronic music system (providing that its output level is 600-ohm) and from a live acoustical source. The individual or combined input levels are monitored via VU meters, as described in chapter 9. A standard VU meter has two different calibration scales for the indication of gain levels. The "A" scale is a decibel rating from −20 to +3 db; the "B" scale reads from zero to 100 percent, with the 100 percent mark coinciding with zero on the "A" scale. Both "A" and "B" VU scales are illustrated in figure 10.2. The zero db or 100 percent mark is actually 4 db above 1 milliwatt, indicating the optimum level the signal can be recorded without the possibility of causing distortion. Extreme care should be taken not to allow the VU meter's needle to suddenly pin against the right edge of the scale. This causes inaccuracies in calibration and could result in permanent meter damage.

Recording the music at a maximum efficiency level with a minimum of trial runs and experimentation largely depends on the muscian's understanding of what information the VU meter is actually providing. The meter indicates the effective loudness of the signal on the tape, or the volume readings which will make a difference in loudness to the ear. There may be many transient voltage peaks in the signal ranging from 8 to 14 db higher than what the meter indicates. These transients usually occur in the attack of the signal. The VU meter indicates the "rms" (root-mean-square) value of a signal which is .707 times the peak voltages of the sound. The difference between the maximum level at which a signal can be recorded and the average operating level of the recorder (0 db). is called the "headroom." On the tape recorder the headroom is usually 6 db above 0 db which is not enough for even an 8 db transient peak. In recording acoustic instruments the peak values can be anticipated by an an experienced engineer. Various instruments are recorded at points below 0 db in order to leave enough headroom for distortion. In recording electronic music in the studio these peak transients may cause significant problems. The attack time and general envelope

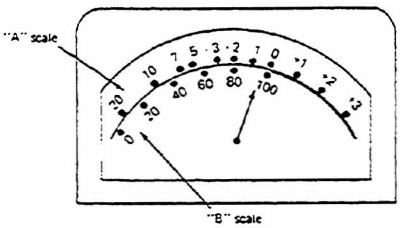

Figure 10.2. VU meter scales

time of electronically generated and processed sound can be much faster than most acoustic events. This problem is compounded by the fact that the musician is often working with unfamiliar sounds so that the peaks cannot be anticipated. In the studio the recording chain is usually directly from the instrument to the line input of the tape recorder, with no microphones or speakers to smooth out the transients. Certain kinds of professional recording studio processing equipment such as limiters and compressors can reduce these problems, but such equipment is often not available to electronic music studios.

So how does one get a clean recording with a maximum signal-to-noise ratio and a minimum of distortion? The first answer is a well maintained studio with periodic cleaning and servicing of the instruments. The second answer goes back to the perennial task of "practice." Learn the tape recorder just as you would learn to use any other instrument. You soon discover just how far the instrument can be pushed before it begins to give unwanted responses. The meter readings mean different things with different kinds of sounds, and this is only learned through practice and familiarity. A good beginning point is to record as close to 0 db as possible. This means above the 0 db meter reading as well as below it. Realize that there is some headroom on the tape and don't be afraid of going "into the red" with various passages, especially those with smooth, simple harmonic character. As stated previously, do not record at such a level that the meter suddenly pins against the right hand edge. This will definitely cause distortion problems and will probably result in damage to the instrument.

Some general knowledge about record/playback EQ can help in making efficient recordings.

Figure 10.3 shows the unequalized record-playback response of a professional quality tape recorder operating at 7½ and 15 ips. A comparison of the response curves shows that each recording speed requires a different equalization pattern. Generally speaking, the required treble or high-frequency boost varies inversely with the tape speed. On most machines the change in equalization is accomplished with a simple switch with speed indications. The actual location of the equalization circuits within the total record/playback circuitry is very important. The guiding principle is

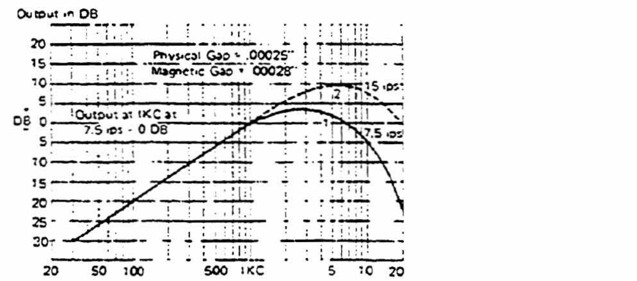

Figure 10.3. Record/playback response, unequalized. (From Herman Burstein and Henry Pollak, *Elements of Tape Recorder Circuits*, Blue Ridge Summit, Pennsylvania, Tab Books, 1957, p. 94. Used by permission of the publishers.)

to get as much undistorted signal on the tape as possible. The recording process, although it affects both the high and the low frequencies, most sharply attenuates the high end of the spectrum. If the high-frequency boost were located in the playback circuit, there would be a marked increase in audible tape hiss and the signal-to-noise ratio would also be adversely affected. Therefore, the high-frequency boost is a function of the recording circuit. In figure 10.3 it can be observed that up to 30 db boost is required at the lower end of the spectrum. This amount of boost in the recording process would produce a tremendous amount of distortion on the tape, therefore bass equalization is usually a function of the playback process. At times the composer may be concerned with producing deliberate distortion in the recorded signal, therefore an ideal studio situation would be the possibility of bass and treble equalization both during record and playback, along with provisions for the standard NAB equalization curves for the various recording speeds.

It is essential that studio machines have separate record and playback heads. The average home machine may have dual purpose heads which are used for the combined function of recording and playback. The major disadvantage of these is that the playback output function is not as efficient as it could be with separate record and playback heads. Consequently, most professional machines are designed with three separate heads: erase, record, and playback as shown in figure 10.4. Besides presenting possibilities for tape echo (see chapter 12, page 194), the separate heads allow for monitoring of the signal either before it enters the recording circuit or after it has been recorded on the tape via the playback head. This comparison between the input and output signal is referred to as "A-B" comparison. It is accomplished by means of a switch that allows for monitoring before the signal is recorded, or from the playback head. For optimum recording quality, there should be very little difference in the signal levels with an A-B comparison.

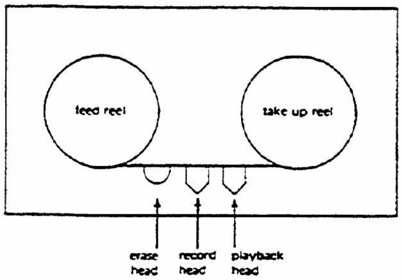

Figure 10.4. Head format for three-head decks

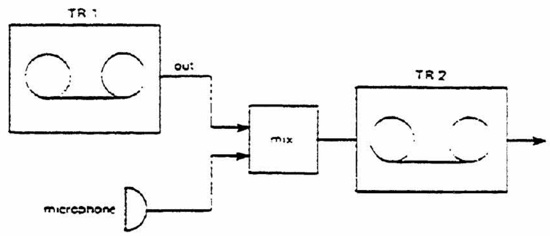

Figure 10.5. Sync recording with two tape recorders and a mixer

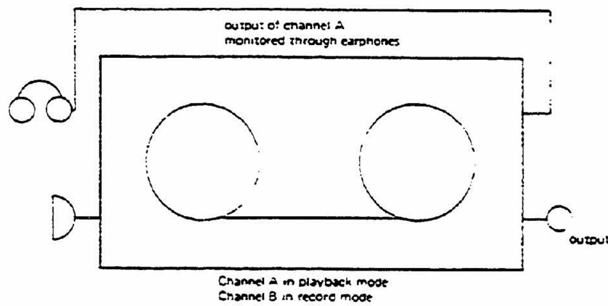

Figure 10.6. Sync recording with a sterophonic tape recorder

Stereo and Multi-track Recording

In constructing a composition, the process many times involves recording several different channels for sound and then mixing them down to one single channel; this is the dub-down. The recording process involves recording on one channel, rewinding the tape, and recording the next channel while monitoring the previously recorded channel, and then repeating this procedure for as many channels as are needed or allowed. Because the playback head is usually located an inch or two beyond the record head, exact synchronization between the input and playback signals is almost impossible. If the machine is equipped with only dual purpose heads, and if it is possible to record and playback on each channel independently, exact synchronization is possible in the following manner. After recording on one channel, the tape is rewound and information monitored by having the first channel in playback mode, the second in record. The output of the first channel and the input to the second will be in sync since the heads are stacked in line with each other. If the recording is being done with an air mike, then the monitoring should be done through earphones to prevent any first-channel sounds from being picked up by the second channel microphones.

Synchronous recording on a machine with separate record and playback heads must be done on a deck with special circuitry called "selective synchronization," or "sel-sync." "Sel-sync" is the trade name of the original process developed by Ampex and only appears on Ampex products. The same process will appear in various guises such as "multi-sync," "simul-sync," etc., on other instruments. Sel-sync allows the record head to function temporarily as a playback head when put in operation by a special switch. By doing this, one can monitor the signal on any channel(s) while recording a signal at the same temporal place on any other channel. While monitoring from sel-sync, the fidelity isn't as high as it would be from the normal playback head, but it is quite adequate for sync purposes. (Be sure to switch the monitor back to the playback head for the final dub-down.)

Material may be synced together with two tape recorders and a mixer. The process involves recording information on one tape recorder and then rewinding the tape and patching the output to a mixer input. The new source of information is then patched to another input of the same mixer and the mixer output is patched to the input of a second recorder. Now tape one can be monitored as part of the total input signal to recorder two. All of the information ends up on a single channel. A block diagram of this technique is shown in figure 10.5. This same method may be simplified with the use of a stereo tape recorder. By patching the output of tape recorder one directly into one channel of tape recorder two and adding the new information on the other channel, the need for a mixer is eliminated. Of course, if tape recorder two has independent record and playback for the separate channels, the necessity of the first tape recorder is eliminated.

Some home stereo machines have independent record playback switches for each channel. These machines usually have the record/playback functions in a single head. Material may be recorded on one channel and then the channel may be set for playback only. Material may then be recorded on the second channel while listening to the simultaneous playback of the first. The two channels will be in-sync due to the combined record/playback operation of the head (see figure 10.6).

The procedure illustrated in figure 10.5 is built into some tape recorders and is referred to as "sound-on-sound." The simultaneous recording with switchable record/play operation illustrated in figure 10.6 is commonly called "sound-with-sound." With "sound-on-sound" the information is recorded on one channel and the tape is rewound and set to record on channel two. If the sound-on-sound circuit is activated, the information on channel one will automatically be mixed with the input signal to channel two, resulting in both signals being on the same channel. The same process can then be repeated with three sequences, ending up on channel one. This procedure can be repeated up to about five takes. After that there is a great deal of loss in the previously recorded tracks. On some machines the "sound-on-sound" process may be done only on one channel.

Sound-on-sound may also be accomplished using two other approaches. On some professional machines it is possible to switch out or unplug the erase head. This allows the composer to record sequence one, then rewind the tape and record sequence two over the original sequence without erasing it. This can be done by placing some non-inductive material, such as celluloid film, over the erase head to defeat its function. A major drawback to this technique is that there is a great amount of high-frequency loss with each successive overlay. There may be a total gain loss of up to 18 db or more in the original takes. Therefore, if one uses an erase head defeat method, it is advisable to record the sequences made up of the lower frequencies first and also record the first takes at a slightly higher level. Sound-on-sound may also be achieved by the placement of the playback head preceding the erase head. This configuration allows the recorded signal to be added to the input signal before it is erased. As illustrated in figure 10.7 this method is a single-channel version of the sound-on-sound technique described previously. The addition of the extra playback head provides sound-on-sound possibilities without the gain or high frequency loss encountered with the erase head defeat method.

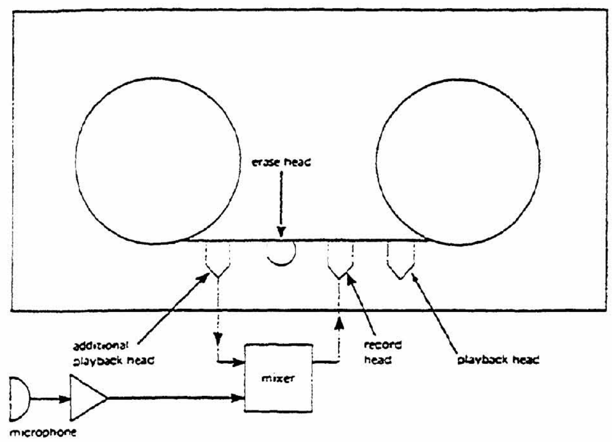

Figure 10.7. Additional playback head for sound-on-sound recording

Due to the various electromagnetic characteristics involved in the recording process, the more tape surface available for a signal the greater the signal-to-noise ratio. Therefore, everything else being equal, the best quality recording will be obtained by utilizing a full-track system. As shown in figure 10.8, this means that the recording track covers almost the entire width of the tape. According to the figures given in *Modern Recording Techniques by Robert Runstein*,[1] the exact track size is .240 inch, or .01 inch narrower than the ¼-inch recording tape. If the composer plans to make several source tapes to be mixed and dubbed down to one or two channels, it would be a good procedure to try to have all of the source tapes recorded full-track. Full-track recording also makes many more editing possibilities available, as will be discussed later in this chapter. Half-track heads cover .080 inch of tape area and are available in monophonic or stereophonic configurations. The half-track mono system has only a single record head, making it possible to record on the upper half of the tape, then turn the tape over and record independent information in the other direction on its lower half. A stereophonic half-track format involves two in-line half-track heads stacked one above the other mounted in the same housing. There is approximately a .07-inch separation between the two tracks, which prevents excessive signal leakage or "crosstalk" between the two channels. (A certain amount of crosstalk is to be expected, but this should occur at a level of about 60 db below the information on the track being monitored.) With this configuration, two simultaneous channels of information can be recorded and played back together in perfect synchronization. Because of the availability of more recording time, the average home machine utilizes a quarter-track head configuration. The quarter-track format has two in-line heads with individual gaps of .043 inch stacked together in one housing. The measurement from the center of head one to the center of head two is .134 inch, which means two other tracks can be placed alongside the original tracks. With four tracks on the tape, one stereo system may be recorded in one direction and a second in the other. The usual format for this is tracks one and three comprise one system and tracks two and four comprise the other (see fig. 10.8). The advantage of quarter-track stereo is the availability of twice the recording time by using both directions of the tape. The numerous disadvantages include (1) less recording area per channel, resulting in a lower signal-to-noise ratio and less fidelity, (2) less separation between adjacent tracks resulting in more crosstalk, and (3) the fact that if both

1. Published by Howard W. Sams & Co., N.Y., 1974.

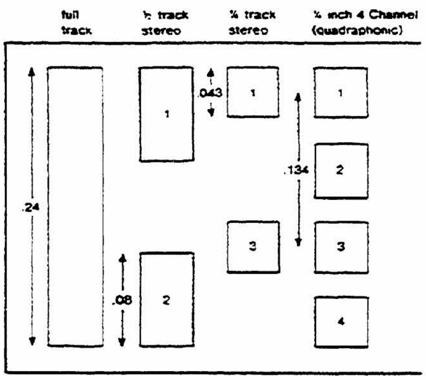

Figure 10.8. Tape recorder head formats

directions of the tape were used, splicing would be impossible without cutting into the other track. For these reasons most studios incorporate half-track stereo systems. If for some reason a source tape were to be recorded with a quarter-track format, it should not be played on a half-track machine. The half-track head will also cover the adjacent track on the quarter-track format and, assuming that that particular channel is blank, will result in excessive tape hiss during playback. For this reason some tape decks, although they employ exclusive half-track recording, have provisions for both half- and quarter-track playback. This is usually accomplished by having two sets of playback heads and switching in whichever format is needed, or by using only quarter-track playback heads and, by means of a lever, shifting them down so that they are placed right in the center of the half-track playback path.

By careful planning it is possible to use full-, half-, and quarter-track machines together to achieve a very unusual full-track mix. Up to five channels of information may be reproduced on a single full-track tape by following this procedure: record information A on a full-track machine and, using the same tape, record information B and C on the two respective tracks with a half-track machine. (Usual stereo format designates the left channel as channel 1, the right channel as channel 2.) This of course will erase part of information A's signal but it will still be present in the gap which separates the two half-track heads. What is now on the tape is, starting from the top edge, information B, information A, and information C recorded at approximate gaps of .09 inch, .07 inch, and .09 inch respectively. Now, using a quarter-track stereo machine, record information D and E on the tape's two respective tracks. The final tape will then contain five different tracks of information located, in order from the top edge, B, D, A, E, C. All five tracks may then be monitored by play the tape on a full-track deck. This is not the most effective way of mixing, but it has been used very successfully many times by composers with limited mixing equipment. One precaution to be observed is that the individual machines have erase heads which only affect the particular tracks being recorded. A full-track erase head on the half- or quarter-track machine makes this technique impossible.

A more effective method of multi-track recording is with regular multi-track machines with the required number of tracks all running in the same direction. The most common multi-track format is the four-track tape recorder. Utilizing ½-inch tape, the head format is four in-line record heads, each with a .080-inch track and the same amount of separation as the half-track stereo format. Some four-track home machines, referred to as "quadraphonic," use ¼-inch tape and have the same formats as quarter-track stereo, but with all four tracks running in the same direction. The reason for the ½-inch tape is that it allows for wider tracking and better separation of the individual channels. Because the four-track machine is used primarily for building up various layers of a composition, it is necessary that it have sel-sync operation. Eight, twelve, sixteen and twenty-four-track formats are available using 1, 2, 4 and 8 inch tape.

Most electronic music studios are equipped with at least one and often two quad or four channel tape recorders. It is less common, but not unusual, to find eight channel decks in an electronic music studio, and these are more common two professional recording studios. With a bit of care and technique what might appear as limited resources for laying down a multi-voiced composition can be used very effectively. If the music requires only four independent voices a quad deck is all that is needed. As one becomes a more experienced player there is no reason that two voices could not be recorded at the same time on a single track. This would leave an extra track open for "sweetening." Sweetening is a process of adding extra effects or voices after the recording of the basic tracks. After the basic tracks have been recorded the musician may decide that an extra event here and there will enhance the music, or perhaps a voice should be doubled to make it stronger. For such after-thoughts it is always a good idea so keep an extra track open for sweetening. When recording two parts on one track the balance between the two voices must be exactly the way you want it to be on the final mix. Once both voices are on tape there is very little you can do to change the balance. It is good practice to choose two voices having the same function in the music. If you record a foreground or lead voice on the same track as a background voice it is very difficult to anticipate the final balance. If both parts serve as background information they can simultaneously be boosted or attenuated as needed. If the two parts are in different registers, one part can be boosted or attenuated by using selective equalization in the final mix.

Bouncing or *ping-ponging* can also be used if there is a limited number of tracks available. This technique involves recording information independently on two different tracks, then mixing the two parts and recording the mix on a third track. If the mix is acceptable the two original tracks can be erased and used for new information. This technique is best approached in the following way:

1. Record voice one on track 1

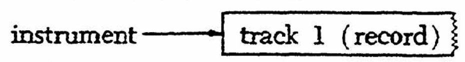

2. Rewind the tape and switch track 1 for sel sync playback (do not record over this track!). Monitor track 1 through headphones or over a speaker and record voice two on track 2.

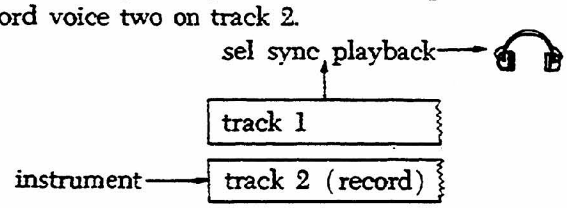

3. Rewind the tape and set track 1 and 2 for normal playback and patch both tracks to a mixer. Experiment with the mix until you are satisfied.

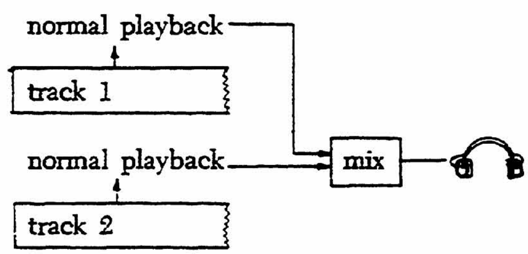

4. Patch the mixer output to *track 4* and record the mix.

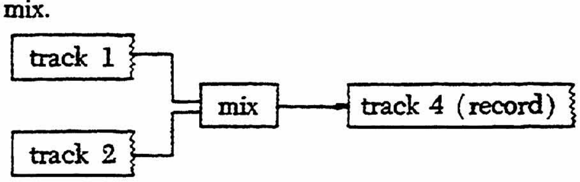

You now have two voices on track 4, leaving tracks 1 and 2 open for new information. If for some reason the mix has to be recorded from sel sync playback *do not record on an adjacent track.* The proximity of the sel-sync playback and record heads may cause a high frequency oscillation in the mix. When laying down these tracks do not be confused by the front panel layout of the tracks. On semi-professional ¼ inch quad decks the top two meters are for tracks one and three and the bottom two are for tracks two and four. The head configuration, however, orders the tracks in vertical descending order with track one at the top.

Bouncing techniques may be used between two different machines and provide the possibility of even more voices. Bouncing can be used to generate 5, 6, or 7 voices on one quad deck, then all the channels can be mixed, in normal playback mode, and *dumped* on a single track of a second machine. A number of voices could then be recorded on the remaining channels. Adding a second mix from tape 1 may cause problems when trying to sync with what is already one tape two. The problems of synchronization and noise build-up are akin to group dynamics—the problems increase geometrically as the number of voices increase. The more voices that are committed to a mix, the more likely you are to misjudge the balance. But if you have enough patience, bouncing can greatly increase the resources of a seemingly limited situation.

Although the composer can find a justified use for a great number of tracks, he must keep in mind that each channel adds to the number of mixer inputs and equalization circuits required to make that channel usable. Except for very special situations, the composer will find that an eight-track machine will be sufficient for the normal studio requirements. In most cases the four-track machine is all that will be required; this is the usual multi-track deck found in the average studio. A well-equipped studio, however, should have two four-track machines to allow for four-track dubbing plus the availability of as many half-track stereo and full-track machines as possible.

Playback at speeds different from the recording speed, if used with taste, can result in some very intriguing sounds. The provisions for speed changes at ratios other than 2:1 (3.34:7.5 and 7.5:15) gives the composer even finer control and provides many other variations in sound. In the event that two tapes must be synced together, minute variations in speed allow the composer to make very fine adjustments in timing and tuning. There are several tape machines available today with provisions for limited speed variation. By means of a manual control pot, the playback speed may be varied within a range of from 20 to 30 percent. (Some of these commercial decks provide for speed variation both in record and playback mode, while others operate only in playback mode.) With more professional machines that utilize a "hysteresis synchronis" motor, the basic record/playback speed is determined by the voltage frequency, which in the United States is a 60 Hz standard. With these machines it is then possible to use other frequencies than the standard 60 Hz and achieve speeds other than the standard 7½ ips and the 2:1 multiples and divisions thereof. Several studio model tape recorders have a special input jack which allows an external oscillator to determine the speed. With this manner of control, speed will vary in direct proportion to the input frequency. The usual speed range is variable from 1-7/8 ips to 60 ips, or a 32:1 ratio. This means that a frequency recorded at the slowest speed could be raised five octaves during playback at the fastest speed. The composer must also remember that this also causes a 5:1 change in the tempo of the recorded material. With experimentation it will be found that speed changes can also be very useful in achieving very unique timbre changes. Some of the newer tape decks have the control oscillator built into the deck chassis and no external oscillator is needed. The advantage of an external oscillator is that it would be possible to use various frequency-modulated signals to control the tape speed, providing the composer with an unusual approach to sound modification. Because of the various loop techniques used by the composers of musique concrete, the loop machines also had provisions for a certain amount of speed variation. Even in the more modern studios these loop machines can be very useful in various multi-deck set-ups and were discussed in relationship to tape delay and feedback techniques.

Splicing

Voltage control has several times over reduced the task of tape editing which was once the major job in creating electronic music. But still the composer will find that a basic knowledge of editing procedures can be a very useful tool. Repairing broken tape, adding leader, adding or deleting bits of information after the major sequences have been recorded, making loops, etc., all require a certain amount of skill with the splicing block. The guiding factor in making a good splice is to create as little disturbance as possible to the recorded signal. If possible, all cuts should be made at an angle somewhere between 45° and 60°. A cut above an angle of 60° will begin to cause an excessive amount of electrical disturbance as the splice passes the playback head, and a cut at an angle below 45° may cause the tape edges held by the splicing tape to bend back and wear loose. In the event a 90° splice must be made, the noise and disturbance can be kept at a minimum by following procedures discussed below.

A deck with an edit button frees the transport system so the tape may be manually moved back and forth across the playback head. (The composer might experiment recording by manually moving the tape by the record head while the transport is free.) This enables the operator to pinpoint exact sounds and silences at any point on the tape. Of course, as the tape is moved more slowly, the pitch is proportionally lower. Consequently, the novice editor may at first find it very difficult to recognize a particular sound due to speed and pitch distortions. However, he will soon learn how various attacks, transients, decays, and timbres sound under editing conditions. As soon as the particular point on the tape is found, it is marked with a wax pencil. The tape should be marked on its shiny side at a point on the tape backing directly on top of the playback gap. A machine specially designed for editing locates the head at a very accessible point just for that reason. If the head is in an inconvenient position for marking, the common procedure is to locate the portion to be clipped with the playback head and then mark the tape at some other consistent and convenient point along the tape path. The editing block should have a cue mark located at the same distance from the razor guide as the cue mark is from the playback head, as shown in figure 10.9. When the cue mark on the tape is lined up with the cue mark on the editing block then the exact portion of the tape which was against the playback head will line up with the razor guide. This procedure also protects the playback head from dirt and grease from fingers and marking pencil. The cut should be made as close to the beginning of the sound as the editing technique allows. If this is carefully done, then the disturbance caused by the cut is masked by the attack transients of the recorded sound and the splice will be less noticeable. If the composer plans to edit silences into acoustically recorded events, it is good practice to record a minute or so of silence from the same environment and save it for editing purposes. If a silence must then be added to a final recording, the extra tape will contain the same level of background noise and apparent acoustical characteristics. When adding silences to a recording from an electronic sound source, it is desirable to use leader tape because of its complete lack of a recorded signal. Most composers prefer to use paper leader, since a plastic leader is capable of holding a slight amount of static which is often audible as it passes the playback head. The composer should also take care that the razor blade used for cutting the tape does not become magnetized. A magnetized blade will induce stray magnetic fields onto the tape, and this electrical disturbance will be audible as the splice passes the playback head.

The most important factor in making a good splice is cleanliness. A professional splicing block will hold both pieces of tape firmly yet will allow them to be easily butted together with a minimum of handling and without any overlap. Any oil or dirt on the tape will prevent the splice from holding firmly and could result in noise. Once the two pieces of tape are in position, they are joined by a short piece of splicing tape. Very long pieces of splicing tape affect the pressure pads which hold the magnetic tape flush against the playback head and may result in a 3 to 4 db signal

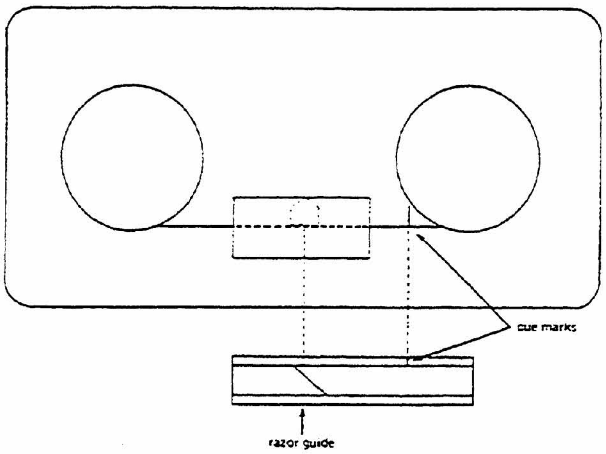

Figure 10.9. Set-up for "off-the-head" editing

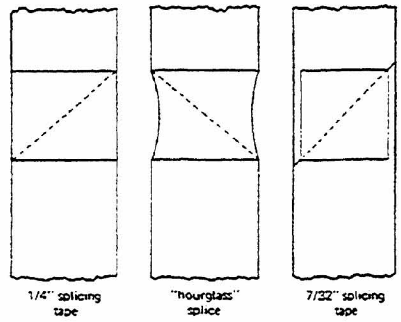

Figure 10.10. Splicing tape formats

loss. If the splicing tape is too short it may tend to peel back as it wraps around the heads. The splicing tape should then be slightly longer than the horizontal width of the largest head. The preferred splicing tape is 7/32 inch wide, or 1/32 inch narrower than the recording tape. The reason for this is that after long periods of storage the adhesive may "bleed" out from under the splicing tape and cause the adjacent layer to stick. If the splicing tape is the same width as the recording tape, the problem is magnified because of the possibility of the adhesive seeping over the edges of several layers of recording tape. (The hourglass splice pictured in figure 10.10 really doesn't solve the problem and the indentation could result in momentary gain loss if it cuts into the recorded signal.)

To avoid direct handling of the magnetic tape, the master tape should have leaders at both ends of the recorded portions. At the head the leader should extend right up to the initial attack, and tail leader should be added as soon after the final decay as possible. This is done to eliminate any tape hiss which may proceed or precede the recorded signal. As an added aid it is a good practice to have a minute or so of a 1k test signal recorded at zero db according to the VU meter preceding the head leader tape. This allows the player of the tape to set the playback gain at the level intended by the composer, ensuring accurate reproduction. As mentioned earlier, the tape should be stored in aluminum tins in a tail-out position to prevent pre-echo. An added precaution is to provide about 1/4 inch of bumper tape between the center reel hub and the head leader. The guide holes in the reel hub cause tension fluctuations in the tape wound in the first 1/4 inch nearest the hub and may result in periodic gain fluctuations at those points which line up with the holes. The bumper tape acts as a cushion between the hub and the leader to prevent these gain fluctuations. All extra bits of unused tape should be salvaged for this purpose, since it is much less expensive than leader.

For the unexperienced editor all of these precautions and procedures may seem very time-consuming and even unwarranted. True, tape editing is at first a very tiring and often frustrating process. A good editing habit to get into—one which will make editing an easier task—is to always lay out tools and materials in the same way. The beginning editor usually spends more time searching for a razor blade than he does searching for the right place to cut. As for the necessity of careful editing, ask any composer whose master tape has been ruined because of splicing tape ooze, excessive print-through, or gain fluctuations due to lack of bumper tape.

In the modern studio, splicing is usually used for adding or deleting various parts of the tape or for adding leader. Various splicing configurations can also be used to create a limited number of attack and decay patterns. The amount of playback gain, although dependent on the strength of the recorded signal and amount of playback amplification, can also be a function of the amount of tape which comes in contact with the playback head. A 90° splice into a sound will result in a very sharp attack which is boosted by the electrical disturbance caused by that particular cutting angle. A more gradual attack would be achieved if the cutting angle were only 10° or 15°. As the tape passes the playback head, more and more of the recorded surface would come in contact with the head, resulting in a rise in output gain. As mentioned earlier, less than a 45° cut will eventually affect the stability of the splice, but these artificial attacks are usually made on source tapes and re-dubbed onto a master. If a splice such as the one shown in figure 10.11B is made on a stereo tape, the effect would be an attack and crescendo on channel B followed by a later attack and crescendo on channel A. To achieve a simultaneous attack pattern on both channels of a stereo tape, a splice such as the one shown in figure 10.11C would have to be made. The editor may even carry this technique to the very complex manner of creating amplitude modulation, as shown in figure 10.11D. In the

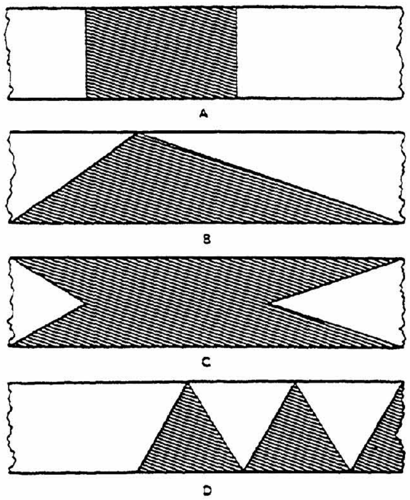

Figure 10.11. Envelope generation with splicing patterns

same manner, decay patterns can be created using the opposite angles. With this technique, attack and decay times are a function of angle and tape speed, therefore, if fidelity permits, some of these effects are easier to achieve at slower speeds. Another problem with this technique is that unless the editor has an editing block suited for these unusual cuts, the accurate fitting of the leader and magnetic tape is very difficult. This, along with possible gain losses due to very long patches of splicing tape, further demonstrates the value of voltage control. As all these envelopes are readily available with simple function generators.

One of the most important considerations in terms of recording and playback equipment is its location within the studio. It can be very time-consuming if the composer must continually move back and forth across the studio to press the record button and then back to the output system to control what is being put on the tape. If the tape machines cannot be situated in a place convenient to both the system output and tape input, remote control devices may be used. Tape decks intended for studio applications are available with provisions for remote-controlled playback, record, fast forward, and rewind. Unless manual cueing is required, this gives the composer full control over the tape transport system, and he still has immediate access to the signal sources. In commercial recording studios, the tape decks are usually built into a large panel and their placement is quite permanent. The obvious advantage of this situation is that there is less chance of maladjustment or damage due to excessive movement. In the electronic music studio many composers prefer to have all equipment, including turntables, tape decks, mixers, amplifiers, etc., fastened to chassis with portable rollers. Because of the many unusual and unpredictable uses to which a composer may subject equipment, the added advantage of portability is very important. This also makes the equipment available for use in live electronic situations which may occur away from the studio. A tape machine which is intended for use in concert situations, in addition to all of the other requirements discussed thus far, should be designed in such a way that all parts are very accessible for maintenance purposes. It is not unusual to have to repair a machine during the intermission of a concert where time is of the essence. (The ideal situation would be to have a machine so rugged and dependable that no maintenance is ever required, but here the artist is waiting for technology to make the required advances.)

The electronic music composed realizes that the tape recorder is used for more than just storing information. The tape recorder is an instrument which must be treated with just as much care and knowledge as a fine violin and must constantly be kept in optimum condition. Many times the studio budget does not provide for a full-time technician to make sure that the machines are properly cared for. Therefore, the composer should carefully study the operation manual, specification sheet, and maintenance manual of all tape recorders in the studio. Even if he does not have the technical ability to repair a machine, he should at least be aware when it is not operating up to the standards set by the manufacturer, so that professional maintenance can be summoned.

This chapter has served only as a very basic introduction to general techniques of audio recording. The increasing development of new recording formats such as the four-channel cassette, digital recording, etc., must be considered outside the scope of this text. Recording is a highly skilled art which is not as essential to mastering the techniques of electronic music as in the earlier years of musique concrete. More and more colleges and universities are offering two and four year recording arts programs outside the area of the electronic music.

Many of the specialized applications of the tape recorder as a signal processing device (echo, flanging, short term storage for gating, etc.) are covered in subsequent chapters where the techniques can be discussed in terms of a specified musical need.

For more detailed information on techniques related specifically to the professional recording studio I recommend *Modern Recording Techniques* by Robert Runstein (Howard W. Sams & Co., Inc., Indiana, 1974) and *The Recording Studio Handbook* by John Woram (Sagamore Publishing Co., Inc., N.Y., 1976).

11 Audio Mixing

The basic process of mixing audio signals was introduced in chapter 10, and simple mixing techniques have been used in many patches up to this point. This chapter will present more detailed information concerning audio mixing, a general survey of mixer formats, and some suggestions for manual and voltage controlled mixing techniques.

Definitions: Linear and Non-Linear Mixing

A basic definition of a mixer is that it is a device which allows for the combination of two or more signals in any proportions into a composite signal. A composition may contain several simultaneous levels of activity being produced by independent modules, but for all of the produced signals to be perceived from the same source it is necessary to mix them down to a single output signal. Also, the construction of many complex timbres may involve the mixing of various proportions of several less complex signals into a single output. The mixer may serve other functions, such as gating, cross-fading, panoramic division, and signal distribution to several independent channels, all of which will be discussed in this chapter; but it is usually desirable when composing with a complex system to use the mixer as the final output terminal before the amplification or recording stage. This makes possible the introduction of sudden changes in balance and provides for making last minute additions or subtractions to the composite signal without the need for repatching.

There are two basic methods of mixing: linear and non-linear systems. In a linear system, equal changes in applied voltage continually result in equal changes in the current or rate of transfer of electricity (which is measured in amperes). This means that the output current of a linear mixer will vary in direct proportion to the number of signal inputs and their individual level settings. In other words, the mixer will combine all of the input signals to a composite output without distorting any of the original sounds. The output signal is an algebraic sum of all the input signals according to their various independent amplitudes. In other words, the composite output signal contains *only* the components of all of the input signals (fig. 11.1). Without going into detailed electronic theory, this linearity also means that the resistance in the circuit is essentially the same over the circuit's entire operating range.

With a non-linear device, the flow of current (which may be observed as resistance) is variable, since equal voltage changes result in different current changes. Figure 11.2 graphically illustrates the difference between linear and non-linear response. The composer's concern for non-linear mixers is that it introduces additional frequencies into the final output which were not present as one of the inputs. These extra frequencies are the sums and differences of all of the input signals, as shown in figure 11.3, or heterodyning and are very similar to amplitude modulation. Although the audio engineer and hi-fi buff do everything in their power to avoid non-linearity, the composer may find it a very useful tool. When processed through a filter or reverberation unit, sum and difference frequencies take on a very eerie character and have a sound and direction very different from conventionally generated frequencies. Non-linear mixing may be achieved by simply connecting all of the input signals together without the use of an electronic mixer (see figure 11.4). The number and strength of the sum and difference frequencies produced will depend on the non-linearity of the particular circuit. The non-

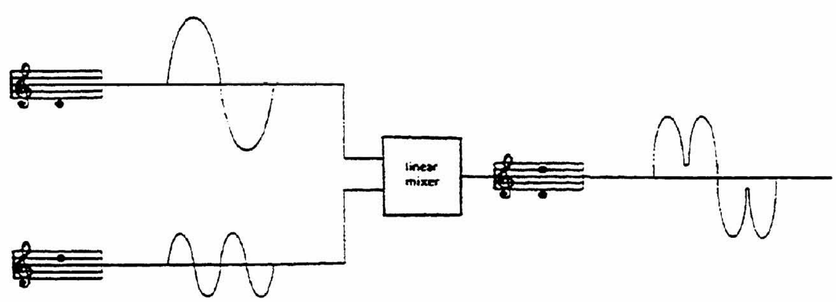

Figure 11.1. Linear mixing

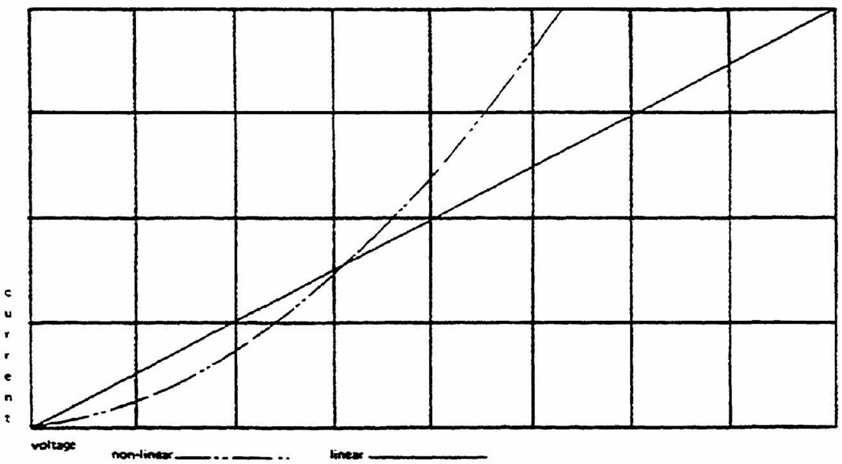

Figure 11.2. Linear and non-linear reaction

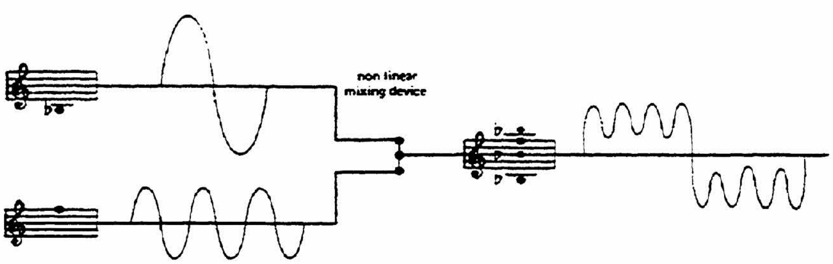

Figure 11.3. Non-linear mixing

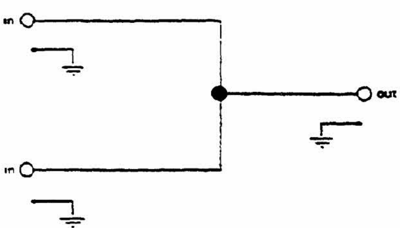

Figure 11.4. Non-linear mixing circuit

linearity can be controlled to a certain degree by inserting extra non-linear components, such as diodes or capacitors, into the circuit.

Most studios are equipped with patchboards and multiples which can be used for non-linear mixing. A patchboard is simply a panel containing many input or output jacks which can be wired together as the various circumstances require (fig. 11.5). Any group of interconnected sockets comprises a "multiple" which may be used as a non-linear mixing circuit. Any jack can be used as either an input or an output, so that any number of signals may be connected together. Strategic location of patchboards and multiples within the studio or system permit it to be used as an extension device. Many times you will find that your patchcord is not long enough to reach the input of the next processing device in the system. If a long enough cord is not available, then two shorter cords connected via a multiple will, it is to be hoped, make connection with the next module. (The basic law with respect to the availability of patchcords—see epigraph —also applies to their length.)

Using a multiple as a non-linear mixer can produce some interesting sounds. First of all, if you don't have a multiple on your system, make one! Buy an inexpensive plastic or metal chassis box and 12 or 16 jacks of the type used for the audio connections on your instrument. Organize the chassis layout into several rows of at least four jacks each. Drill holes in the chassis and mount the jacks. Solder all *common* connections together, using pieces of insulated wire as illustrated in figure 11.6. Double check to make certain that all connections are only to common terminals of each jack. If the chassis is metal there is no need to attach the ground bus to the ground of your instrument. This multiple box can be used for routing signals to and from different instruments as long as the signals are compatible in terms of voltage and impedance.

Patch two low register sinewaves to the mult and then patch the mult to an output so that the "mix" can be heard. Tune the oscillators to a close interval, smaller than a minor second, and you will be able to clearly hear the "beat frequency." This *beating* is the result of the non-linear change in current which manifests itself as an amplitude fluctuation, equal to the difference in Hertz between the two signals. Now add a third oscillator to an unused mult input and tune it to produce a second beat pattern (see figure 11.7). Take these same three audio signals and patch them to a normal (linear) mixer and listen to the result. You should notice that the beating is not as

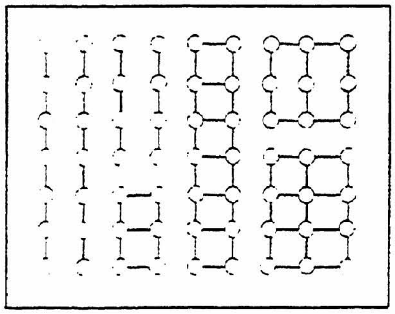

Figure 11.5. Patchboard (lines indicate connected jacks)

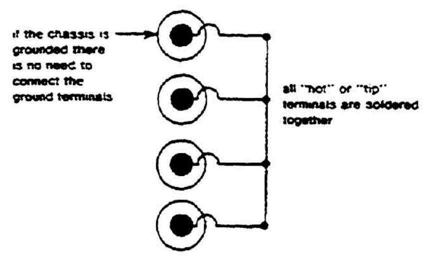

Figure 11.6. Terminal wiring

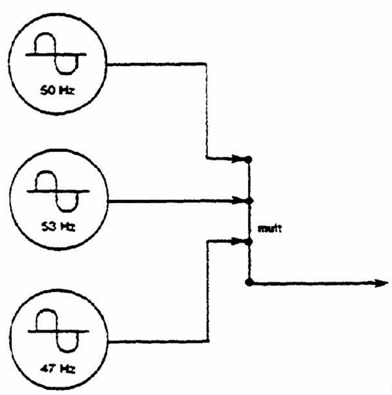

Figure 11.7. Using a mult to enhance "beating"

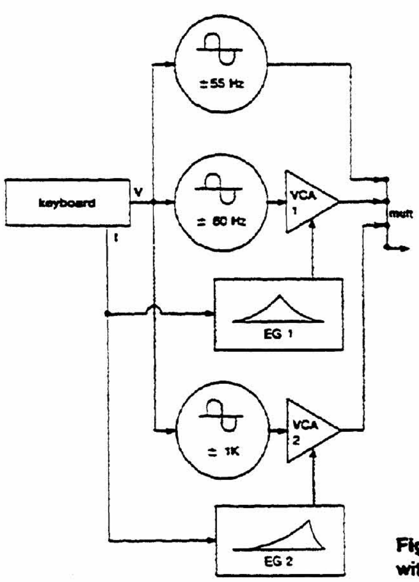

Figure 11.8. Instrument with non-linear mixing

prominent and the composite mix will be somewhat louder. This is because the changes in the fluctuating voltages of the waveforms result in equal changes in current. Patch the three oscillators back to the mult and try the same experiment using very high frequencies. You will hear sounds very much like amplitude modulation, as the "beats" are frequencies in the audio register. Actually, you are hearing the sum and difference frequencies of the signals *plus* all of the original signals. The texture of this spectrum can be increased by using oscillators with different kinds of harmonic content. Also try sweeping the oscillators back and forth in their higher register and listen to the changing spectrum. Program this sweeping with some function generator so you can really listen. After you have the sound in your mind's ear repeat the same patch using a normal mixer.

The two points to remember here are that a non-linear mix makes the distortion more apparent and simultaneously results in a reduction in signal strength. But this certainly does not mean that it cannot be used to generate some interesting sounds. Make the patch in figure 11.8 and experiment with different controls on the VCOs and the VCA. You might find something you like. Also consider the possibilities of further processing the spectrum with filters, or using it as a program or carrier for various types of modulation. This technique works best with low output impedance oscillators (less than 250 ohms).

The commonly understood use of the term "mixing" refers to active, *linear* mixing which results in consistent gain and minimal distortion. Although the composite mix is free of any significant distortion, the process involved is more complicated and calls for some special considerations relative to the signals.

Any circuit offers a certain amount of resistance to the flow of alternating current. This opposition, when a combination of resistance, inductance, and capacitance, is called "impedance," and is measured in ohms. For maximum transfer of power from one circuit to another, the output and input impedances of the two circuits must be equal. Impedance matching is most important when dealing with low-level devices such as microphones, or when using very long lines between outputs and inputs. In other words, a 600-ohm output should connect to a 600-ohm input and a 50k-ohm output should connect to a 50k-ohm input. For this reason, mixers are usually designed with a particular input impedance to be used expressly with devices and modules with the same output impedance. A high-quality microphone mixer is usually equipped with a switch which will select a variety of input impedances, depending on the particular microphone being used. Although there is a great variance the most common microphone impedances are 50 ohms, 150 ohms, 250 ohms, 600 ohms, and even as high as, and higher than, 100k ohms. Many microphone mixers incorporate a preamplifier which brings the input signal up to a level equal to the level of all of the other modules in the system. The ideal mixer will have individual impedance switches for each input so that it can accept and mix signals from a variety of sources at one time. The same reasoning also may necessitate variation in the mixer's output impedance. In most cases the mixer is designed as part of a total system and its output impedance always matches the input of each module. There may be instances, however, in which the mixer output must be patched to some external circuit which has a different input impedance from the system.

In integrated modular synthesizers the *outputs* of each module are normally a low impedance of between 600 and 1k ohms. The *inputs* for the modules is usually a higher impedance, typically between 50k and 100k ohms. This is done so that several outputs can be connected to one input (e.g., mixing, multiple modulation, etc.) without loading down the circuits and causing gain loss. Thus a general rule for circuit connection is that signal outputs are usually as low as possible, and inputs are usually of a higher impedance so as not to load down the outputs of other modules.

Another consideration the composer should be aware of is the type of transmission line employed. A circuit that uses two output or input connection points is said to have an unbalanced or single-ended input or output. One of the connections is for the wire carrying the voltage, the other connection for the wire at ground potential. A balanced or differential line employs three different terminals. In this case the AC voltage is divided between two out-of-phase lines and the third connection is grounded (figure 11.9). When working with very low-level or long lines, the balanced circuit is preferred because an unbalanced line is very susceptible to stray, unwanted signals and hum. Balanced lines are less susceptible because the circuit will react only to the difference between the two out-of-phase voltages. Without the use of a special transformer, it is not advistable to connect an unbalanced to a balanced line. Since microphones usually employ a balanced line, the microphone mixer is usually equipped with balanced inputs. On the other hand, most mixers incorporated within commercially available electronic music systems are designed with unbalanced inputs. The ideal situation would be a mixer with accommodations for accepting both balanced and unbalanced lines.

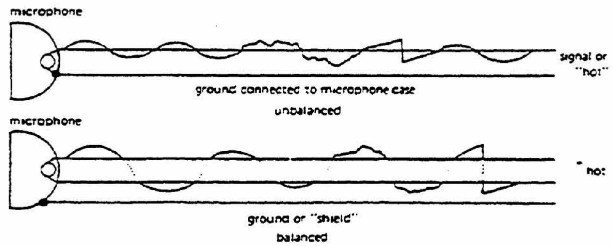

Figure 11.9. Balanced and unbalanced lines

A final item to consider about the electronics of a mixer is whether it is active or passive. Just as with the various equalizers, a mixer may or may not employ additional amplification. Depending largely on the number of inputs in the circuit, insertion loss may be as high as 45 to 50 db. To compensate for this loss, additional amplification is included in the circuit to bring the signal back up to its original level, or higher. Active mixers provide at least unity gain at line level. Additional gain is usually specified by the manufacturer. The passive mixer contains no amplification, and a certain amount of loss is to be expected, depending on impedance and the number of inputs. With active mixers there is often provision for controlling the total amount of gain produced by the circuit. This is accomplished by a special "adder" switch (see page 186).

Once the composer has considered the results of linearity, non-linearity, balanced and unbalanced lines, and active/passive networks, he must choose a mixer design according to its application. The simplest mixer design is one that has two or more inputs and one output. Each individual input will usually have its own gain pot which will allow the mixing of the various input signals in proportions set by the composer. In creating complex waveshapes via a mixer, the composer will find that certain frequency components have amplitude levels higher or lower than other frequencies. If the amplitude of each input signal can be independently controlled, the composer can then have complete control over the composite waveshape. The total amplitude of the composite signal can be controlled by raising or lowering all of the individual input signals, keeping their relative amplitudes at the same ratio. This, of course, is very difficult to do, and impossible to do instantly. For this reason a mixer is usually equipped with a master gain control which controls the total output level of the composite signal. This allows the composer to change the output level instantaneously without affecting the indivdual input ratios (fig. 11.10).

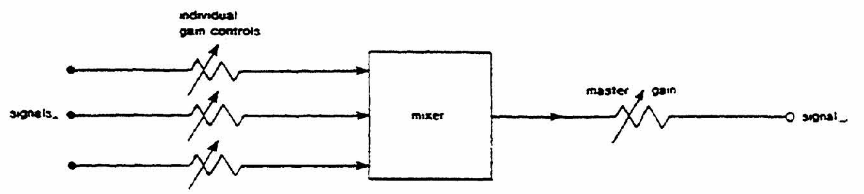

Figure 11.10. Mixer with master gain control

Mixing Stages: The Master and Sub-Mix

Within an electronic music studio and even in live performance there are different levels of mixing. Figure 11.11 illustrates a typical configuration. At first glance this appears to be a complex situation and indeed it is not simple. This is a common mixing situation and not really to difficult to untangle. First of all, identify all of the sound sources. We can assume that all signal outputs, including the pre-amplified microphones, are line level, low impedence at optimum gain. There are eight different sounds heard in the final mix:

1. VCO A (assume that all of the oscillators are being controlled and doing something interesting)
2. VCO B
3. A pre-amplfied microphone for an acoustic source
4. Channel A of a pre-recorded tape
5. Channel B of the same tape
6. Another pre-amplified acoustic source
7. VCO C
8. The output of a balanced modulator. Notice here that one input to the modulator is a mix of a monophonic tape and VCO C.

Taking one stage at a time let's examine the different points of control. Sources 1, 2, 3 and 4 are patched to a single mixer. Since there is another mixer later in the chain this is called a "sub-mix." There is no difference between a sub-mixer and main mixer in terms of electronics. It simply refers to where it is in the sequence of patching. There is an input attenuator or "fader" for each of the signals, 1 through 4. This makes it possible to make one source louder or softer than, or equal to all of the other sounds in the mix. Once the correct balance between voices 1-4 has been established the output of the mixer is patched to a master mixer. The master mixer also has input faders so that any desired input level can be established.

The second sub-mixer (B) receives signals 3, 5, 6 and 7. Notice that source 3, the pre-amplifiers, is split and patched to both sub-mixers. The split may be done by parallel outputs on the pre-amp or via a mult. Each of these signals is mixed in the desired proportion by the input faders on the mixer. The composite mix is then patched to a second master mixer or channel and its input level is set as desired.

The third sub-mixer (C) is utilized in a slightly different manner; it is used to mix the signal from VCO C and a monophonic tape in equal proportion. This mix is then patched to an input of a balanced modulator. The reference signal for the modulator is

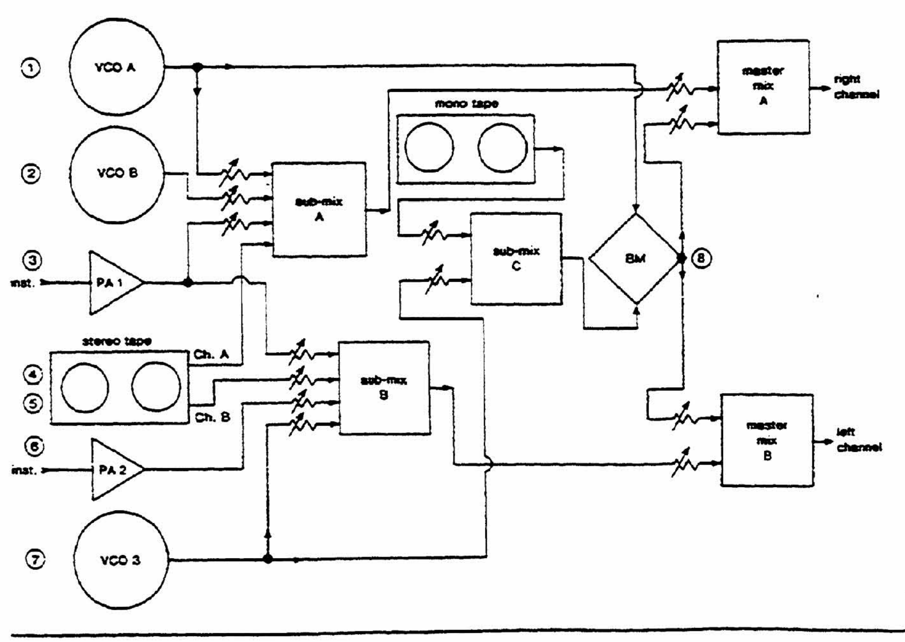

Figure 11.11. Sub-mixing

shown here as a VCO A. The output of the modulator is then patched to *both* of the master mixers. If you consider the outputs of sub-mix A, sub-mix B, and the modulator as three separate voices, this type of patching provides for easy manual control. Voices 1 and 2 are controlled by the input faders on master mixers A and B. Voice 3 is split between the two master mixers and controlled by its own fader. The only drawback here is that the level control for voice three is on two separate faders, which will call for two hands in playing the mix. Perhaps a more efficient patch would be to route the output of the balanced modulator to a VCA before being split to the two mixers. In this way the gain to both mixers can be controlled by a single pot.

The two master mixers are connected to the tape recorders or amplifiers in the studio, and thus it is common for these mixers to have a pot to control output gain. At the same time there may be one "master gain" control for both outputs, which allows the musician to raise or lower the level of both outputs while still maintaining the relative gain levels.

The Monitor and Program

Most professional mixers have two different output sections: a *monitor* and a *program* (also referred to as "bus" or "output"). Everything coming into the mixer is normally connected to the program outputs. This usually means that they go directly to the inputs of the tape recorder. The monitor outputs are usually connected to the amplifier and speaker system in the studio. This configuration is illustrated in figure 11.12. This type of mixer is of great aid because during the mixing process you may wish to listen to only part of the final mix without disturbing what is being recorded on the tape. For example, during the mixdown you suspect that one of the parts is not quite correct but this is difficult to hear within the context of the total mix. If you turned down all of the other voices they of course would not be recorded. The monitor switches could be used to listen to an individual part without interrupting the recording mix. What goes to the monitor amplifiers is determined in a variety of ways, depending on design, and which various terminology is used. A "monitor" "preview" or "solo" switch usually disconnects the *program* output from the *monitor* amps and reconnects it to whatever signal is associated with the switch. Sometimes the solo or preview signal is assigned to a specific channel in the studio and sometimes it is assigned to all of the channels; again this depends on the mixer design.

At some point, either after or during the recording process you are going to want to hear what is "on" the tape as opposed to what is being "sent to" the tape. Sometimes a studio patch bay is used to re-patch the tape recorder outputs to the studio monitor system. If this is the case it is just a matter of changing some patchcords. More often the situation is that the outputs of the tape recorders are patched into the main mixer, hence it is possible to record from one tape to the other as in figure 11.13. If this is the case special thought has to be given to the signal routing. To playback a tape it is just a matter of turning up the tape output controls on the mixer. If there is no separate monitor and program output the usual result is that the mixer output goes simultaneously to the tape recorder *and* the studio sound system and it is here

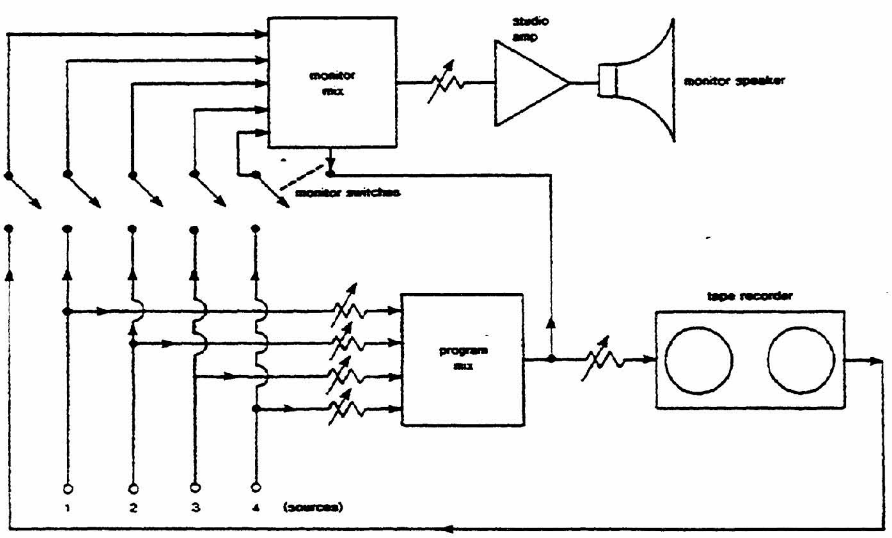

This patch returns the tape recorder output to the monitor so it may be listened to while recording.

*When a monitor switch is on the program is automatically disconnected.

Figure 11.12. Program and monitor mix outputs

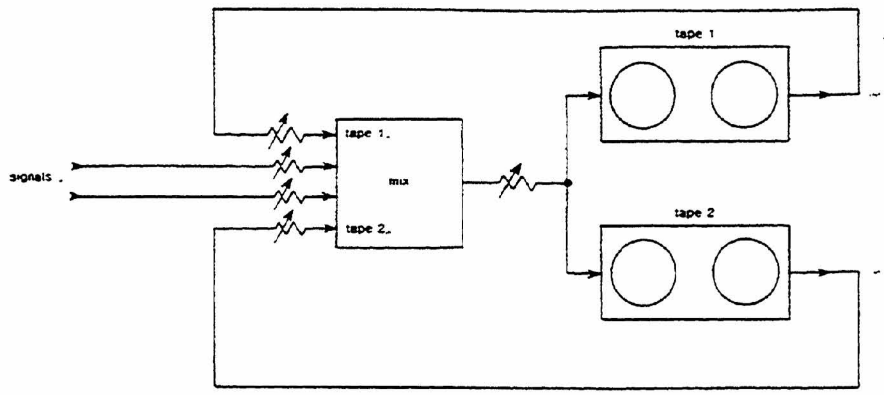

Figure 11.13. Tape recorder routing through the mixer

that one can run into problems. If you are sending a signal to a tape recorder and the output of the tape recorder is patched back to the input of the mixer, you can create a *feedback loop*. The signal is being sent to the recorder, recorded on the tape, sent from the output of the tape recorder back to the mixer, the output of the mixer again goes to the input of the tape, etc. This is a useful technique for the production of tape echo but more than likely the final product will be unwanted oscillation and distortion (see page 194, chapter 12). The best solution is to have separate program and monitor outputs on the mixer. If you want to hear what is going onto the tape you can punch it up on the monitor. If you want to hear what is coming back *off* of the tape you can punch the tape output up on the monitor. Since what you send on the monitor is not being sent to the tape recorder there is no chance of feedback. If there are no separate monitor and program outputs, take care that the tape output pots on the mixer are not up during the recordng process.

During live performances a typical patch would be to patch the monitor outputs to a monitor speaker system just for the performers and to patch the bus or program output to the main sound system for the audience. Another possibility is to patch the monitor mix to a set of headphones for a performer playing the electronic instruments. This makes it very convenient to determine whether all the parts in the mix are behaving as expected before they are sent out for audience consumption. With monitor or solo switches you can listen to each voice before it is brought up on the input faders.

Signal Modification with Mixers

Some studio mixers have features such as EQ, variable output channel selection and effects lines. On professional mixers each of the inputs will usually have their own parametric equalizer. This makes it possible to tune each voice independent of the other voices. One voice may call for a mid-range boost and another may require some high end attenuation. Some mixers may have an "equalizer In/Out" switch. In some cases you may not wish to use any EQ on a particular voice, and the whole process can be bypassed. At the same time you may wish to monitor just that particular voice. On some mixers the monitor switch for a voice comes *before* the equalizer stage, on other mixers it comes *after* the equalizer stage. With the EQ in/out switch the channel can still be monitored without any EQ, but keep in mind that if the EQ is switched out the signal goes to the program output un-equalized.

A studio mixer should allow any input signal to be sent to any selected output or set of outputs. This can be done in a variety of ways. On the synthesizer the most common method is direct patching: take a signal output and patch it to a sub-mix or a main channel output. On the studio mixer this routing is usually done with a set of switches or a "pan-pot." A two-channel or stereo mixer such as the Roland 103 (figure 11.14) will usually have a two-channel pan-pot which allows the signal to be located virtually anywhere in the stereo field. With the pot to the full-left the signal will appear on channel A. With the pot at full right the signal will appear on channel B. If the pan-pot is at the 12:00 position the signal will appear to come equally from both channels. At the 9:00 or 10:00 position the signal will be positioned somewhere between center and far left (channel A). This is illustrated in figure 11.14.

The actual electronic process of signal location is explained in chapter 13. At this point, however, the musician may begin to think about the aesthetics of sound location. Figure 11.15 illustrates four different mixes, three of which are "panoramic."[1] Each voice has a particular musical identity: voice 1 is a high main or lead voice, 2 is a lower range lead voice, 3 is a subsidiary counterpoint part, and voice 4 is an on-

1. "Panoramic" refers to the fact that the sources are located in different parts of the stereo space—hence the term "pan-pot."

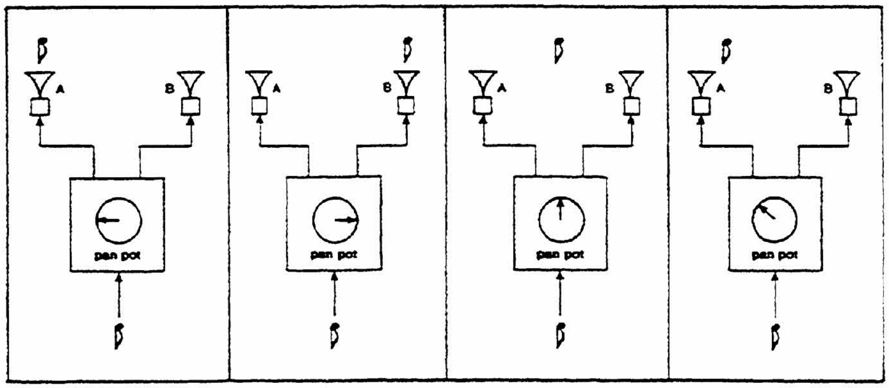

Figure 11.14. Panpots

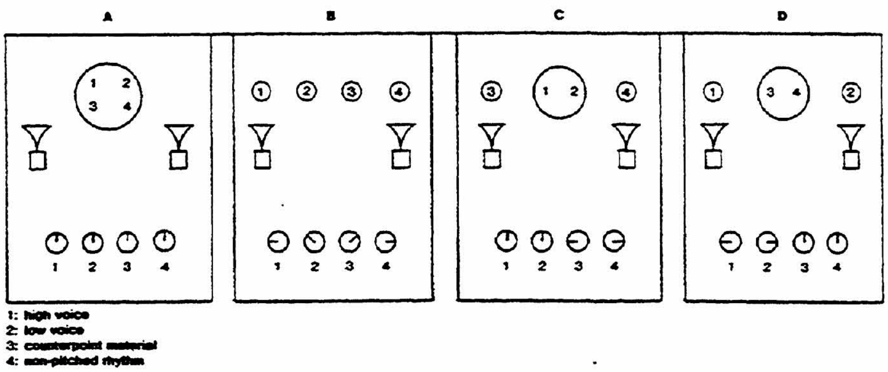

Figure 11.15. Stereo arrays

going non-pitched rhythmic voice. Figure 11.15A is a simple monophonic mix; all of the voices are evenly balanced between both channels and will appear to come from the center of the sound field. Figure 11.15C has the two main voices in the center with the contrapuntal and rhythmic voices on opposite channels. Here the counterpoint and on-going rhythm have been perceptually separated, and some questions should be considered. Does the separation of the counterpoint from the main voice have an effect on the function of the counterpoint? Would it be better to keeep the counterpoint with the main voices, or is it in fact *more contrapuntal* with the spatial separation? Does the isolated rhythm have a distracting effect on the other parts of the music? Figure 11.15D separates the two main voices. If they are playing in unison, or even the same rhythmic line, do you lose the blend of the voices with this much separation? Do you really want a blend of the two voices? Figure 11.15B is a four voice stereo array giving the effect of the parts spread out in a line in front of the listener. In this case the outside voices may have too much prominance. In traditional music practices a "tonic" or "registral" accent is a note which receives attention because it is out of an established register. This concept can be transferred to spatial location, as an isolated or border location voice seems to get more attention. Of course there are no objective answers for these questions and the musician must decide for himself just what effect he is after. The point is that if a mixer provides the possibility of discreet channel assignment or panning, use it to highlight the music.

On a four-channel output or quad mixer the channel allocation is often done by switch assignment. Each input will have 4 output assignment switches. If you wish to have a signal go to the channel 1 bus, punch up switch 1. If you want the signal to go to channels 1 and 3, punch up switches 1 and 3, and so on. A quad mixer with switchable channel assignment may also have panning facilities. The most common format is that the pan-pot will move the signal between any two-channels punched up on the assignment switches. Other formats allow panning between only the two front or two rear channels. The ideal situation for the composer is four channel panning in any pattern. Sound location has become an important dynamic parameter in electronic music. Details on specialized panning instrumentation and techniques are covered in chapter 13.

Effects lines are essential for live performance and are usually an integral part of a professional mixer. These are specialized lines or outputs from the mixer which can be patched into a signal processing instrument such as a reverb, modulator, etc. The output from the processor is then patched back into the mixer, and thus the processed sound may be mixed in any proportion with the other sounds.

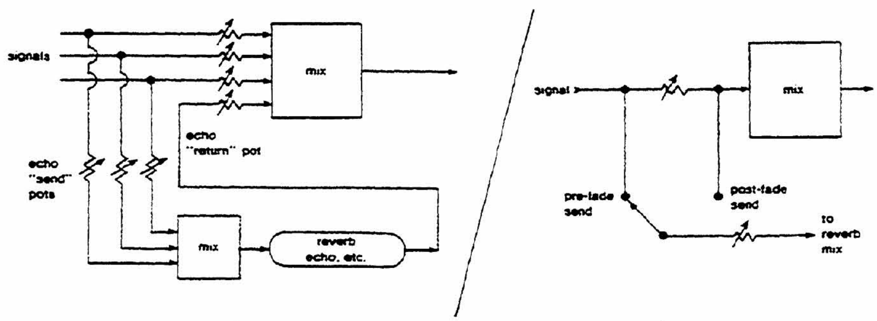

Figure 11.16. Echo "send"/"receive"

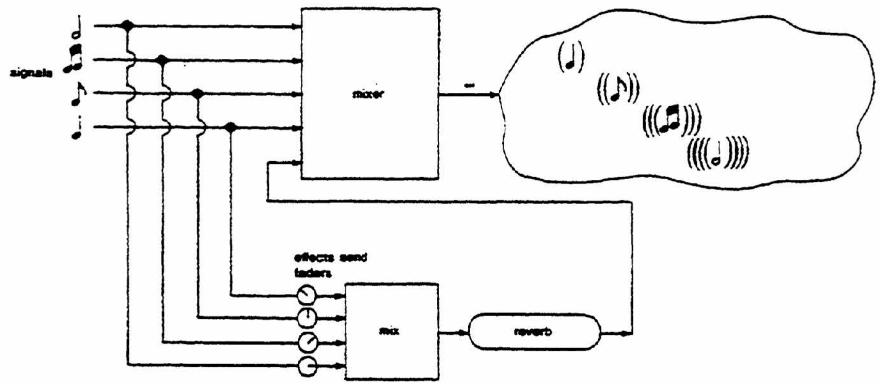

Figure 11.17. Effects send attenuation

The most common effects line is the *echo send* and *echo receive* or *echo return*. The usual format is that any signal coming into the mixer may be picked up by means of a switch or pot and routed to the echo send output. Note in figure 11.16 that this echo send is in parallel with the mixer program output, and attaching a signal to the echo send does not disconnect it from the main mix. The echo send input may have a "pre-" or "post-fader" selector switch. The position of this switch determines just where in the input patch the signal is picked off and sent to the echo send. If the switch is in the "pre-fader" position the signal is picked off *before* the input attenuator as shown in figure 11.16B. This signal routing is needed if the input signal is to be relatively soft in the final mix, but at the same time highly reverberant. By patching it to the echo send at the level it is to appear in the mix the signal may not be strong enough to drive the echo device sufficiently. If the signal is picked up "pre-fader" it is patched to the echo device at its full input level. The reverbed signal can then be patched back into the main mix through the *echo return* and its volume adjusted by the echo return level control. The common practice is to mix the reverbed signal with the "dry" or non-reverbed signal to achieve the correct proportion known as a "dry-wet" mix.

The "post-fader" position for echo send can be used to achieve varying degrees of reverb in a composite mix. In this case the signal(s) is sent to the reverb after it has been attenuated by the input fader. For example, suppose that a mix consists of four sounds, A, B, C and D, and each sound appears to be a bit more distant than the other. As illustrated in figure 11.17, each signal would be attenuated at a different level and sent to the reverb. The signal with the least attenuation will be the strongest in the reverb receive mix.

Other send/receive lines on a mixer may be available but not dedicated to a specific kind of signal processor. These lines may be used any way your imagination suggests to you. They may be patched to filters, modulators, external VCAs, used as modulation inputs for other mixes, or may even be used as separate monitor lines for individual plays. When used as monitor lines the send line will be patched to separate monitor amps and *not returned* back to the main mix.

If your system does not have an effects line it may be worth while to dedicate an extra small mixer for this purpose. In this case the diagrams for the previous patches would be directly appliacable. The great advantage of this situation is that it provides the possibility of voltage controlling the send gain and/or subjecting the send or the return to other types of processing. One possibility is illustrated in figure 11.18. A VCA is inserted in the send path of one voice, and its gain is correlated with the voice's pitch control. The reverb output is patched through another VCA which is being modulated by a sub-audio sine wave. The

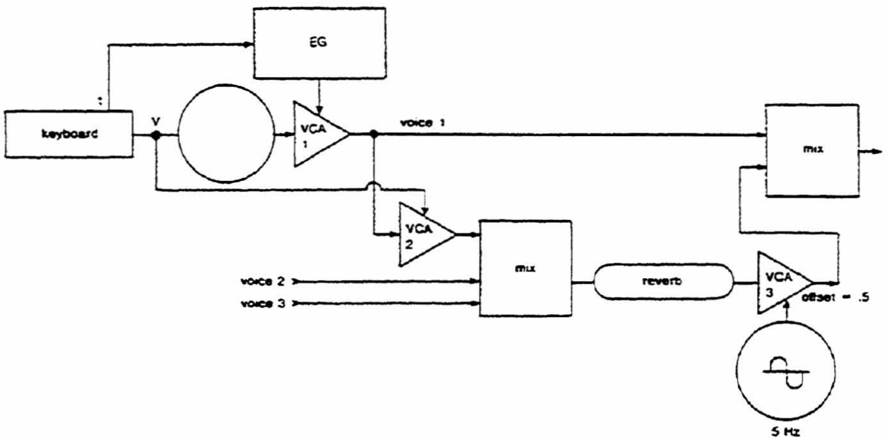

Figure 11.18. Voltage controlled send/receive

result is that higher control voltages cause higher pitches to supply more gain to the send VCA. Thus the higher pitches have more reverb. The final reverb is brought back as a gentle tremolo. The processing possibilities of this configuration can be as simple or complicated as you wish, and perhaps warrant some exploration.

A Summary of Terms

A studio or performance mixer can be as basic or complicated as your budget allows. Most of the options found on standard mixers have been described, and any attempt to deal with all the variations and extra features is unnecessary. The following list, however, breaks down and summarizes, at least, the standard terminology used in professional mixing situations. This summary is based on the outline given in John Woram's *The Recording Studio Handbook*[2].

MIXERS: PATCHING, SIGNAL ROUTING AND CONTROLS

A. INPUT SECTION

1. Microphone Inputs/Line Inputs
   If the signal originates at a microphone, at some point the mike has to be pre-amplified. If the mixer has internal pre-amps it can be brought up to line level (about +4 dBm) before it is routed to the input fader. Audio mixers on synthesizers may not have pre-amps at the mixer inputs so the mike will have to be pre-amplified before it is patched to the mixer input.
2. Patch Points
   Some professional mixers have patch points at different places in the signal path. These inputs and outputs allow a signal to be removed from its normal routing and then patched to an external processor. It is then returned to its normal routing position in the mixer (see figure 11.19).
3. Equalizers
   The common format on large studio mixers is to have a parametric equalizer for each input signal at some point after the input fader, but before the assignment to the output channel.
4. Output Bus (Channel) Selection
   A switch or pot (or both) will determine which input signals are assigned to each individual output channel. All the signals attached to a particular output are considered a sub-mix.

B. OUTPUT OR PROGRAM OUTPUT SECTION
This is where the mixer outputs are connected to the various channels of the tape recorder.

1. Output Bus Level or Channel Level Controls
   When a number of signals have been assigned to a particular output channel the composite signal gain may be controlled by a pot. There will be an output level control for each channel going out of the mixer. The composite gain of all the mixer channel outputs is often controlled by a "master gain control." This pot does not disturb the relative balances between the output channels but attenuates all of the outputs in equal proportion.
2. Output Bus Patch Points
   These patch points are similar to those described in section A-2 except they come after the output channel control. The mixed signal for that channel may be removed from the signal path and patched to a processor. The output of the processor is then inserted back to the normal signal path in the mixer before it reaches the master gain control.

C. MONITOR SECTION
The monitor outputs on the mixer are usually attached to the studio monitor amplifiers.

1. Tape Recorder Inputs
   Each channel of the tape deck is returned to the mixer through the line inputs. Since com-

2. Woram, *op. cit.* pgs. 347-368.

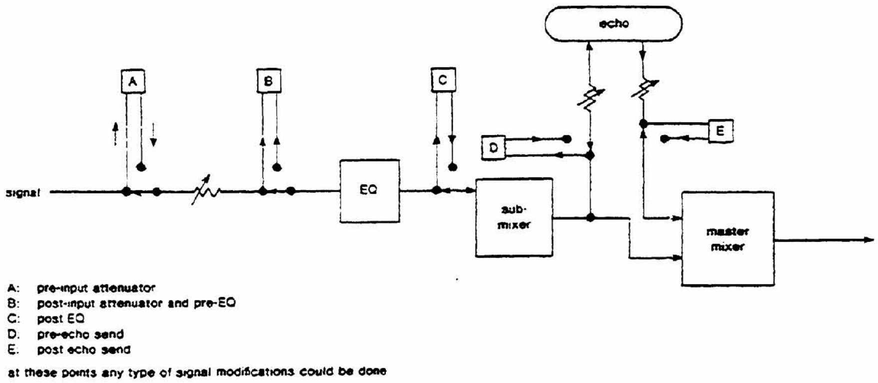

Figure 11.19. Patch points

mon synthesizer mixers are all line inputs there is not real distinction between a normal mixer input and the tape recorder return input. As discussed earlier, make sure that during the recording process the tape return inputs are not up so the signal from the tape goes back out the mixer to the tape recorder input.

2. Monitor Select Switches
   On a professional mixing console a switch will enable the musician to listen to the output of the mixer (often called the bus output) or any of the various sub-mixes. If the switch is in the "tape" position the bus output is disconnected from the monitor output and replaced with the output from the tape recorder. When monitoring any sub-mix, effect return, or patch point, the signal may be heard either on all of the monitor speakers or on discrete monitor channels, depending on design and switching formats.
3. Monitor Control Level
   This is usually a single pot that adjusts the gain of the signal sent to the monitor amps. Since the monitoring may be done at various points in the mixer (pre-fader, post-fader) the musician will wish to adjust a suitable listening level without affecting the levels of the signals being sent to the tape recorder.

D. EFFECTS SEND AND RECEIVE
Some mixers may only have an echo send/receive, while other designs may have several effects lines. If there is only and echo send/receive line, always consider the possibility of using a patch point for additional effects lines.

1. Effects Send Switch
   A switch will be used to send a particular signal to the effects mixer. This switch may be used to pick up the signal pre- or post-fader. Remember that this routing, unlike a patch point, does not interrupt the normal signal path. It simple switches in a mult and sends one leg of the signal to the effects mixer and the other leg maintains the normal signal routing in the mixer.
2. Effects Mixer
   All of the signals sent to an effects line are mixed to a signal line and the gain of the composite signal is controlled by a "master echo send level" pot.
3. Effects Return Level
   The processed signal may not be required to be mixed in to the final output at unity gain. The return level pot makes it possible to return the signal at any desired level.
4. Effects Return Selector
   The processed signal can be assigned to the various program or bus output channels by switches or a pot, depending on design. A common routing is to have the dry or unprocessed signal on one channel and the wet or processed signal on the opposite channel.

Monophonic Mixers

An adequate mixing format for a two-channel studio may be set up with only three small mono mixers as illustrated in figure 11.20. Mixers A and B are the two main output points. The signal from each mixer is split: one leg is sent to the line input of one channel of a tape deck, the other leg being sent to the "auxillary" or "spare" input of the studio monitor amplifer. The output of the tape deck is patched to the "tape" input of the studio monitor amplifier. If the musician wishes to hear the output of the mixers before the signal reaches the tape deck, he switches the monitor amp to "aux" or "spare." If he wishes to hear the output of the tape recorder the monitor amp is switched to "tape."[3] The signals going to the respective chan-

3. Commercial integrated amps will have a variety of inputs; the point here is to get the mixer output and the tape output on any two switchable inputs.

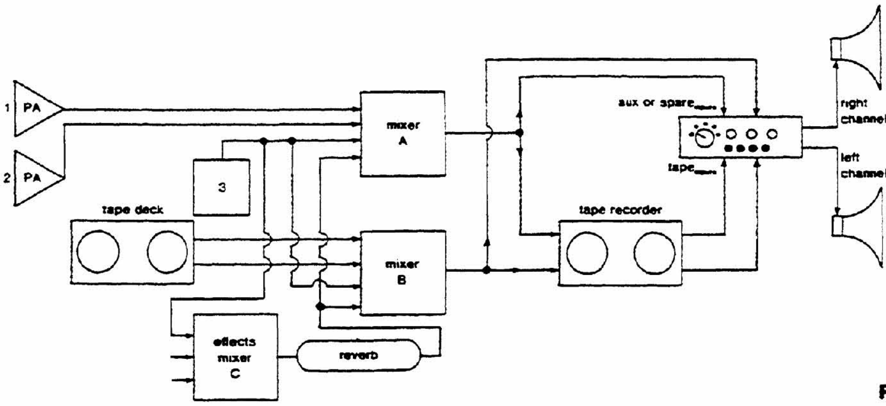

Figure 11.20. Complex mixing with mono mixers

nels of the tape recorder and monitor amp are now patched to either mixer A or B. In this illustration each mixer has identical input formats. 1A and 1B are preamplified signals from two different microphones. 2A and 2B are signals from two different channels of a second tape deck. These signals could, of course, be processed before patched to the mixer. 3A and 3B are signals directly from the electronic instruments. The third mixer, C, is used for an effects line. In this case the signals from the electronic instruments are split with one leg going to mixer C and the other leg to mixers A and B, respectively. The output of mixer C is patched to a reverb unit and the output of the reverb unit and the output of the reverb is split and patched to 4A and 4B. The input attenuators on mixer C are used as echo send fader, and the inputs on mixers A and B are used as echo receive faders. This mixing patch is commonly used within the mixing capabilities of a large synthesizer. It is certainly not as versatile as a professional studio mixer but can usually get the job done.

Matrix Mixers

A mixer design found on several studio instruments is the matrix mixer. This format provides several inputs, usually between four and eight; and any input may be coupled to any number of outputs (usually four outputs are possible) by means of attenuators. The illustration in figure 11.21 is a typical 8 by 4 matrix mixer. Any input signal can be sent to any number of available output channels. The coupling to an output channel is accomplished with individual gain controls so that a signal may be sent to each output at different levels. This allows for the design of complex quadraphonic arrays on tape or in live performance.

Certain mixer designs incorporate a gain function separate from the master gain control. The "adder gain switch" found on various mixers determines the total amount of gain the circuit can provide and thereby be controlled by the master gain control. The number of

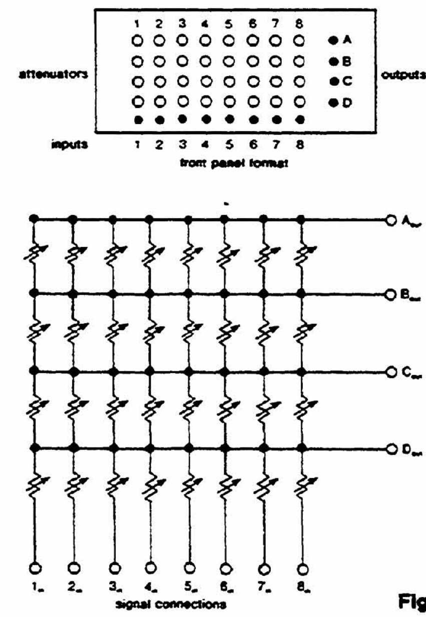

Figure 11.21. Matrix mixer

selection possibilities and amount of gain increase is not standardized and will vary according to design. A mixer designed and described by Robert Moog ("Construction of a Simple Mixer," *Electronic Music Review*, no. 4, Oct., 1967) has the possibility of zero db, +10 db or +20 db gain. If the particular mixer is a combination of normal mixing functions and preamplifier for microphone mixing, the adder switch will often not affect the preamplifier gain.

Voltage Controlled Mixing

As with most other electronic music techniques, the range of applications of the mixer has been greatly extended by incorporation of voltage control. Computer controlled mix-down is common practice in most professional recording studios but is not usually within the financial reach of the student. The following patches will, however, provide some automated mixing techniques well within the resources of a modest electronic music studio, and they are equally viable for live performance.

There are several dedicated voltage controlled mixers available with commercial electronic instrumentation. These are essentially a collection of voltage controlled amplifiers with a mixed output. Many manufacturers package a collection of VCAs in a single module and provide a mixed output just for voltage controlled mixing applications. The level of a signal in a mix is then controlled by applying a control voltage to the control input for a particular channel. A voltage controlled mixer or "quad VCA" is illustrated in figure 11.22. The techniques suggested in the following patches will be discussed in terms of a quad VCA and can be easily transferred to any voltage-controlled mixer format.

One of the many advantages of a voltage-controlled mixer is its ability to switch rapidly from one input to another at speeds which would be impossible manually. Figures 11.23 and 11.24 suggest two approaches using a multiple bank sequencer with separate timing pulse output buses. The music in figure 11.23 requires instant switching between the input signals. This is referred to as a "pulsed mix" and can be accomplished with the gate outputs of a sequencer. Remember that a gate is a rather high magnitude DC voltage and it can usually be used to directly drive a VCA. This mix involves three pitches which are to be combined in different patterns. Three oscillators are tuned to the specified notes and patched to three VCAs. If the VCAs are not already available from a common output simply patch them to a mixer. Turn down the offset on the VCAs so that the signals will not get through until a control voltage is received, in this case the gate voltage from a bank on a sequencer. The patch calls for a switchable three bus sequencer (see chapter 6, page 77). The "C" is to be attacked on the 1st, 3rd, 4th and 7th eighth note so gate outputs 1, 3, 4 and 7 are patched to bus one output which is in turn patched to VCA 1. Each of the other pitch events is likewise programmed. As the sequencer is driven in a steady or varying rhythm the different gates will open each VCA in sequence. If the sequencer does not have sustain gate outputs, then use alternating high and low voltages from the control voltage outputs on each sequencer bank. The advantage of using gates as controls is that the mix is simply an on-off function and the continuously variable sequencer control voltages could be used for other parameters.

The patch in figure 11.24 is similar to the previous configuration, but here the mix is *dynamic* rather than switched. Each "voice" crescendos and diminuendos in and out of the mix according to the dynamics of an envelope generator. In this example the sequencer supplies triggering information to each EG from a different trigger bus. The only drawback is that one is limited to sequential triggering which may be hampering in an improvisatory situation. A more versatile approach may be to manually trigger each envelope. A keyboard with individual triggers for each key could perhaps be an even better solution, if you happen to have such an instrument. Even more ideal is to use a micro-processor for the triggering and/or

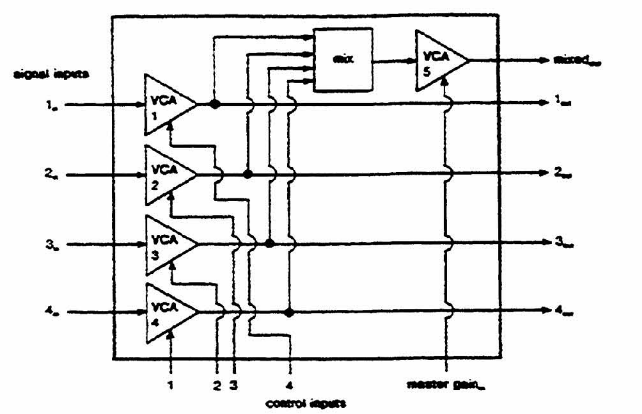

Figure 11.22. Voltage controlled mixer

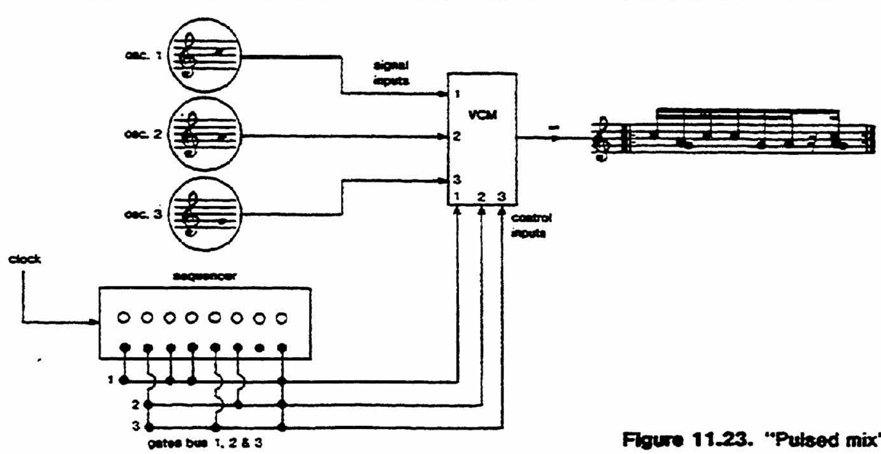

Figure 11.23. "Pulsed mix" with a voltage controlled mixer and sequencer

the envelope information. Voltage controlled function generators could also be used to vary the dynamics of each voice.

Figure 11.25 suggests a randomly controlled mix, with the addition of a random function for the echo receive.

The patch illustrated in 11.26 uses the output of several envelope detectors to control input gains to a voltage-controlled mixer.

At this point the patches bear a strong resemblance to configurations given earlier in the book, and this illustrates the power and versatility of voltage control. Rather than waste space with obvious variations on these techniques, give some thought to different kinds of playing logic which can be used with voltage controlled mixing. How can you incorporate inverters, multipliers, function generators, keyboards, etc., to provide musical design for the final mix of your music? And more important, be aware of the established relationships built into each patch. Is it possible to make a composite mix depending on the time of day or the general noise level of an audience?

A final technique which is often overlooked is the universal mixer—the air! The elastic air space between a listener and the speakers can combine sounds in a way which is virtually impossible with electronic mixers. Think about the last time you attended an orchestral or rock concert. More than likely the orchestra was not amplified but the sound was presented in an array across the auditorium which cannot be duplicated with speakers. Even the rock concerts with elaborate real-time mixing is dependent on the space between you and the sound sources. The significant factor is the

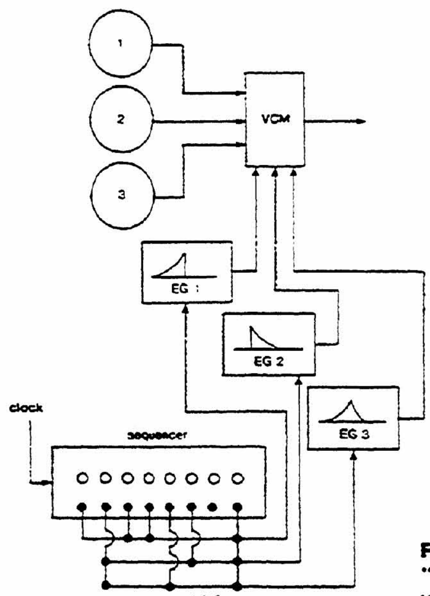

Figure 11.24. "Dynamic mix" with voltage controlled mixer

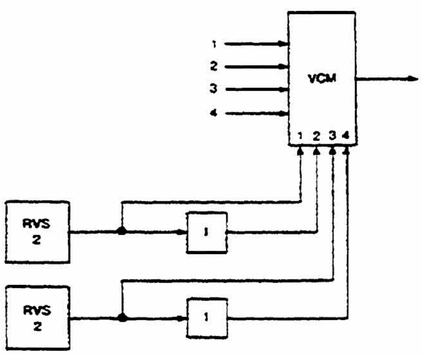

Note that four different controls are obtained from two Random Voltage Sources by inversion. With this technique Signals 1 and 2 will be at exact opposite gain levels, as will be 3 and 4.

Figure 11.25. Random mixing

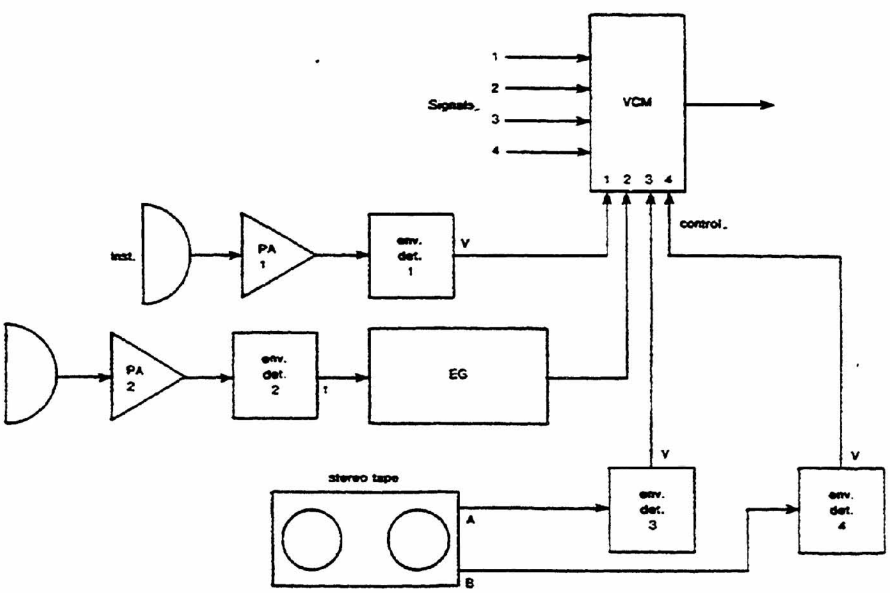

Figure 11.26. Envelope control of a mix

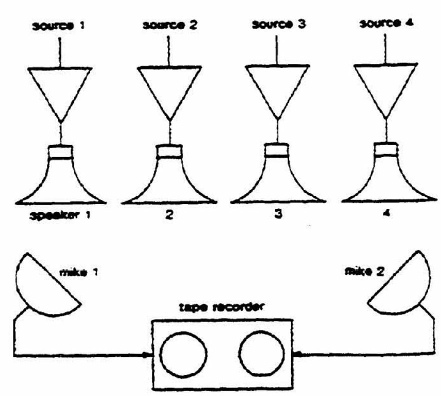

Figure 11.27. Air mixing

acoustic space itself. The size and shape of the hall adds characteristic coloration and reverberation information. The way the room processes the sound can be positive or negative, depending on what you want.[4] If you have access to several large spaces (not just rooms but hallways, tunnels, an outside court, etc.), the following project may yield some interesting results. Set up a good stereo or quad sound system in the available space. Line all of the speakers up even with each other, facing in the same direction and as far apart as possible. Place two high quality microphones in the space at least twenty-five feet in front of the speakers as shown in figure 11.27 and patch them to a tape recorder. Play a variety of sounds through the speakers and vary the gain of each channel of the playback system. The sounds could be prerecorded or played in real-time on an electronic instrument. The signals should, however, be electronic so that you can experiment with different ranges and densities. The recording will not be discrete stereo, as the signals from the speakers will not be direct enough to be picked up by only one mike. You may notice that the higher frequencies are more directional than the lower ones; the bass will appear on both channels and the high end of the mix will have a slight directionality. Also listen to how different spaces process the sound in various ways. You may wish to try out this technique within the confines of the studio. Such a technique is time consuming to set up but can provide the ambiance and effect of an in-concert recording.

Exercises

At this point in the book the reader should have a significant and practical understanding of the instrument and mixing/routing resources on a given electronic music system. The remaining chapters deal with semi-specialized techniques and instrumentation which may be external to the actual sound production-control process. To suggest exercises dealing with mixing techniques is difficult, as a generalized mixing project has to be constructed around the available equipment. A certain project would probably be redundant on one instrument and perhaps impossible on another. One possible suggestion, however, is to try to configure a versatile instrument using a combination of different patches thus far in the book. Determine how many voices you can patch at one time on your instrument and experiment with how they can be pre-mixed and called up as they are needed. Try to construct a mixing format which can change the structure of an instrument. For example analyze the patch illustrated in figure 11.28. Mixer 1 allows the player to select from three possible voices:

A—a keyboard controlled VCO
B—a sequencer controlled VCO
C—the ring modulation output of both voices.

Not only can one select individual voices; don't overlook the possibility of mixing relationships. A could be a main voice, C could provide some sort of rhythmic counterpoint, and B could be brought in occassionally for some coloration. The second mixer allows the player to select or mix between a filtered (D) and un-filtered version (E) of the mix provided by the first mixer. The point is to go beyond thinking of mixing as the last thing one does before the music reaches the tape recorder. Internal mixing can add significantly to the resources of a given patch.

Go back through the preceding chapters or your own patch library to see how many configurations and variations you are able to preset on your instrument at one time.

A second "exercise" is to simply listen! Pull out some of your favorite and/or most hated recordings and make a critique of the mix. Listen to how the lines balance—pay attention to the equalization and depth of each voice. Especially valuable are any live rock, jazz, or classical recordings. The next time you attend a rock or jazz concert pay special attention to how the mix sounds. If you have the opportunity, look over the shoulder of the sound technician and watch what goes on, then think about how you would do it!

4. Refer to Arthur H. Benade's *Fundamentals of Musical Acoustics*, Oxford University Press (New York, 1976) chapters 11 and 12.

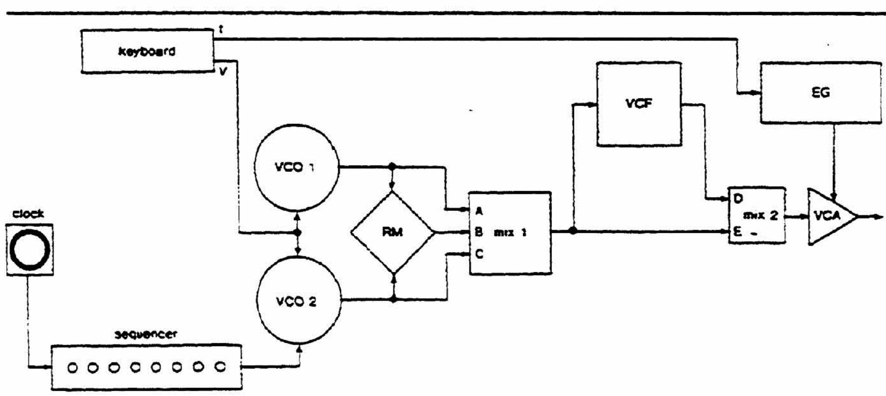

Figure 11.28. A mix variable instrument

12 Reverberation, Echo and Feedback

It is often said that electronically generated sound lacks "life," or is less "humanistic" than acoustically-produced sound. The novice composer working in the electronic medium will often overuse reverberation and echo in an attempt to compensate for the lack of acoustical "realism." It is true that a certain amount of reverberation will give an electronically-generated sound the sensation of being reproduced in a larger acoustical space, but it will not aid the composer in his quest for a true, "acoustically-generated" event. The phenomenon which creates this apparent difference between the sound produced by a square-wave generator and the sound produced by a clarinet is that the acoustically-produced sound is almost continually in a transient state, resulting in many minute variations that give it its characteristic "life," while the frequencies produced by an oscillator are much more stable and, excepting the artificially imposed attacks and decays, there are very few if any transients. Therefore the use of excessive echo and reverberation does nothing to add transients to a sound and often masks whatever transients do exist. If the composer requires the illusion of an acoustically-generated event, he will will usually have more success by using acoustically-produced sound as the basic source. True reverberation is the result of variations in arrival time of a par-particular sound caused by multiple reflections from several surfaces. As suggested in the previous chapter, an electronically-generated sequence can be greatly enhanced by re-recording the playback with an air microphone in an acoustically live environment.

Reverberation and Echo Defined

The terms "reverberation" and "echo" are often used interchangeably, but when working in the electronic medium there is a distinct difference between these two effects. *Reverberation* is the sum total of all reflections of a sound arriving at a given point at different times. The onset of the attack is prolonged for the perceiver until all of the reflected sound has reached his ear. By the same token, all of the decay characteristics of the sound are extended until the final sound-wave reflection has reached the ear of the perceiver. In more general terms, reverberation is characterized by the prolongation of the total sound event for a certain time period which is determined by the distance from the sound source and the perceiver's proximity to the source and the reflective surfaces. *Reverberation time* is defined as the time lapse between the instant the sound is initiated and the instant the total envelope has decayed to a level of 60 db below its original amplitude. If the individual reflections of the sound are at intervals greater than 50 milliseconds, each individual attack can be perceived and the phenomenon is classified as *echo*. Although each individual attack can be distinguished, the succeeding attack(s) may or may not take place before the sound has totally decayed. The number of repeated attacks, or "peaks," along with the repetition rate will vary according to intensity, number of reflective surfaces, and all of the same factors which contribute to the effects of reverberation. It is also known that the decay envelope formed by the individual energy peaks produces an exponentially decaying pattern, and this too might be considered in attempting to recreate natural echo effects.

A review of a patch suggested in chapter 7, (page 105) demonstrates some decay characteristics of an echo (see figure 12.1). A steady-state signal from an oscillator is patched to two VCAs in series. Two different control functions are used. VCA 1 is controlled by a triggered envelope generator. This envelope determines the overall decay characteristic of the sound. VCA 2 is controlled by a repetitive sawtooth function (a low frequency oscillator or a continually triggered envelope generator will work). This control simulates the echo characteristics in terms of speed (repetition rate) and "echo shape." This, of course, is not a real acoustic echo but only a simulation using amplitude modulation. Acoustic echos reproduce the actual attack and decay characteristics of the acoustic signal. In this case the signal is a steady state electronic signal, while the attack and decay characteristics are supplied by an envelope generator. However, this supplies the musician with an experimental patch in which different echo rates and shapes can be explored. Try varying the speed of the LFO and also experiment with different echo "waveshapes." A sawtooth wave provides a sharp echo while a sine wave will soften the

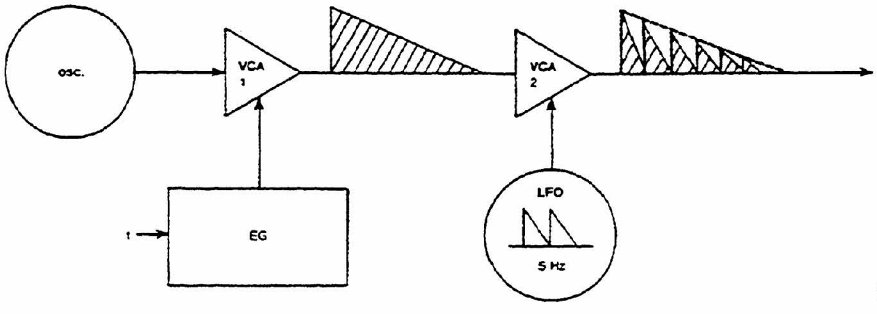

Figure 12.1. Simulated echo with sub-audio AM

attack of each echo. You also might substitute a low pass filter for the second VCA. If this is done each successive echo will have less and less high frequency components.

True acoustic reverberation and echo is only achieved by generating the signals, acoustic or electronic, in a reverberant environment. Perhaps the ideal situation is performing in such a space. Recording the results would require remote recording facilities and the musician does not have much control over the echo or reverb characteristics. An alternate solution is to use dedicated acoustic reverberation chambers. This is an acoustically "live" room which contains a speaker and microphone. The sound to be subjected to reverberation is routed to the speaker at one location in the room and is then received by the microphone at another location in the room and finally routed back to the recording or monitoring circuit. The obvious advantage here is that the reverberation is produced under natural conditions and will thus sound very natural. But there are a number of disadvantages to be considered. First, since each chamber is a monophonic system, every independent channel of sound will require a separate chamber if echo is added during the final dub-down. If two binaural channels are routed through the chamber at the same time, even if taken through two separate microphones, most binaural effects will be lost. The size and shape of the chamber will also determine the reverberation time and the sonic characteristics of the resultant signal. The reverberation time may be altered to a certain degree by changing the placement of the microphone and speaker within the chamber, but this takes a bit of experimentation, and changes cannot be made during the final recording or playback sequence. The character of the reverberation may also be altered by changing the angles of the reflecting surfaces or by positioning various objects about the chamber to break up the reflected waves. This is also a very experimental situation and cannot be done during mastering sequences. The amount of reverberation can be varied somewhat by controlling the amount of the reverberated signal to be mixed with the direct signal, either via the echo-send or echo-receive pots (figure 12.2).

Artificial Reverberation

Most electronic music studios are equipped with devices for the electronic simulation of reverberation. Artificial reverb, although less natural than acoustic reverb, is more practical because of the direct and immediate control over reverberation time it gives.

Artificial reverb may be produced using any of four devices: the reverberation plate, the more common mechanical spring reverb, analog delay or digital delay instruments. The reverberation plate, or "thunder-

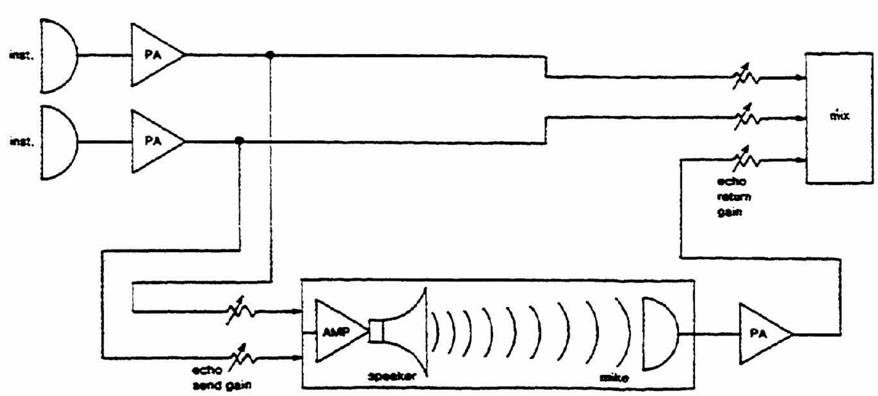

Figure 12.2. Echo chain for an acoustic echo chamber

sheet," is a large flexible metal sheet to which is attached an output transducer which transmits the signal from the system output to the metal sheet and an input transducer or contact microphone which is used to receive the signal. As the signal is transformed into vibrations traveling in various directions along the plate, the fluctuations of the metal simulate the reflections in an acoustical reverberation situation and are received as such by the output transducer. The normal maximum reverberation time for such an echo plate is about five seconds. This can be varied a great deal by placing some sort of damping material adjacent to the plate. This damping can be electrically controlled anrd varied from a state of complete damping to its maximum reverberation time.

The spring reverb is more common to the electronic music studio but is also less accurate and adds more of its own coloristic shading to the output signal. Operating on the same principle of input and output transducers, the signal is fed to a small spring or series of springs which cause the characteristic redundancies in the signal envelope. As with the echo chain illustrated in figure 12.2, the amount of reverberation may be controlled by the intensity of the reverberated signal which is mixed with the direct signal.

Due to the characteristics of any particular system, the subjection of a sound to artificial reverberation will result in additional signal modifications. One of the most noticeable effects of artificial reverb is the critical loss of high frequencies. To compensate for this loss, the more professional reverberation systems employ equalization circuits which provide boosts at various high frequencies. Although there are no set standards for this type of equalization, it is most effective at frequencies around 2k, 3k and 5k Hz. The composer will find that in conjunction with reverberation the boosting of these various bands will restore much of the original timbre to the sound, as well as providing possibilities for a minimum amount of timbre modification. Another consequence of artificial reverb is a definite amount of gain loss. When mixed with the direct signal, this loss in gain is not so apparent. If the composer is working with totally reverberated signals, however, he may find there is as much as 10 db loss in gain. To compensate for this loss, many reverberation systems provide a variable gain pot to boost the output signal. Although the amount of reverb can be controlled by the ratio of mixture with the direct signal, several of the professional systems also provide control over reverberation time by switching the signal to springs of proportionately varying lengths. These reverb times will vary from less than .5 second to a maximum over about 5 seconds.

As with most audio equipment, artificial reverberation was originally designed to add more realism to a reproduced signal. And as with most composers working in the electronic medium, the concern is very often with the production of sounds not to be found in a real acoustical situation. Depending on the desired effects, the composer will require different reverb characteristics for different situations. If he wishes to simulate the reverberant characteristics of a particular environment, it is possible to compute the optimum reverberation time according to the simulated room size, nature of the produced sound, and its frequency band. This is a very complex computation carried out by first finding the average absorption coefficient of the environment to be simulated at the desired frequency. John Backus in *The Acoustical Foundations of Music* (New York: W. W. Norton, 1969) provides charts of absorption coefficients for some of the more common environments. These figures are arrived at by dividing the total number of absorption units by the total surface area (measured in square feet). Once this figure is found, the optimum reverberation time may be computed using the formula

$$T = \frac{.05V}{S \log_e (1\text{-}aac)}$$

where T = the optimum reverb time in seconds, S = the total room size measure in square feet and *aac* = the average absorption coefficient. The type of music being monitored will also determine different reverb times. It has been found that the average reverb time for a large symphony orchestra in a full hall may be as long as 2.2 seconds, while the average chamber music situation needs only a 1.4-second decay for optimum reverberation. Unless the composer is attempting to recreate a live acoustical situation, he may have more success by leaving the formulas to the engineers and acousticians, and relying on his own ear and judgment. Reverberation can even be carried to the extreme of routing a signal through several reverb units in series, resulting in an almost total "smear" of the final output signal. It must be kept in mind, however, that artificial reverberation results in a definite amount of coloration to the sound, and unless this is the desired result it must be compensated for by mixing with a direct signal or by means of equalization.

A final precaution which should be observed when working with reverb units is their handling. The metal sheets or springs must exhibit a certain amount of flexibility in order to produce the required redundance in the signal. If the chassis of the reverb unit is suddenly jarred, the sheet or spring will be put in motion, resulting in a very loud "crash." If done with care, this effect can be used as a very unusual sound source. (The old thundersheets used for sound effects in theaters are very similar to the reverberation plate described earlier.) Very fine control of the "rumbling" can be achieved by patching only the reverb output

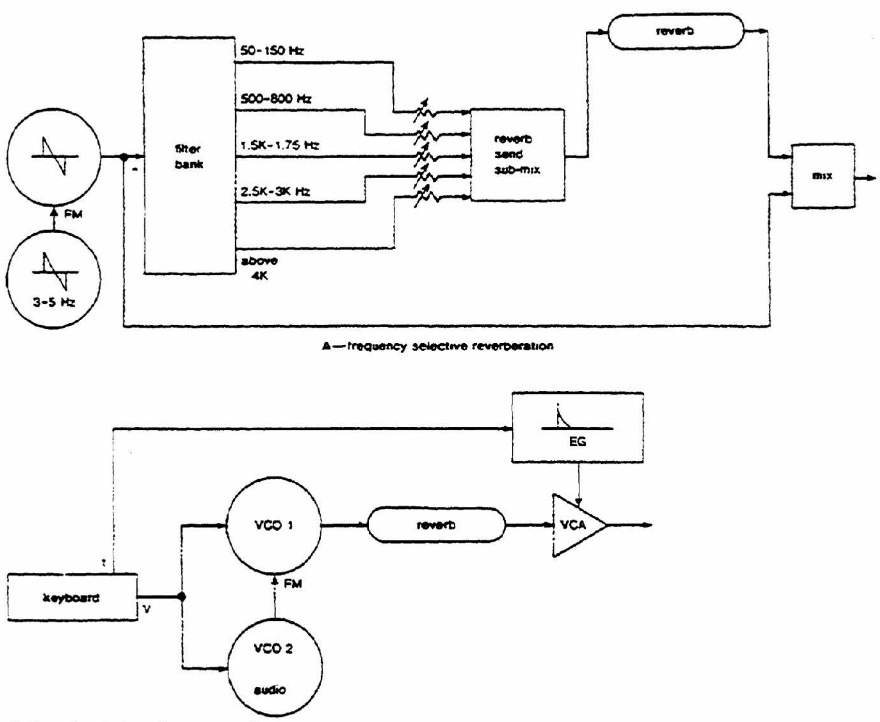

A—frequency selective reverberation

Try this with a thick non-harmonic sound

B—reverb as a coloration effect

Figure 12.3. Unusual reverb applications

to various types of filters, without using any signal to the reverb input. In this manner the very harsh output signals produced by jarring the unit can be split into various "thunder bandwidths."* A minimum amount of movement will cause a great amount of disturbance to the sheet or springs, therefore great care must be taken not to damage the unit or overload the output.

The filter may also be used in conjunction with a reverb unit in another unusual manner. Instead of subjecting the total signal to reverberation, it may be divided into various frequency bands with a bandpass filter or filter bank, in which case the composer has the option of routing individual bands to the reverb. Then, in mixing the bands back down to the original spectrum, some of the frequencies will exhibit reverberation while other frequencies will not (fig. 12.3A). If the composite signal is the result of an additive process, each component could be subjected to reverb with an echo-send provision on the mixing board.[1] But if the signal is a modulation product, there is no prior band separation, and the method illustrated in figure 12.3A would be required. This technique in conjunction with voltage-controlled filters offers the composer many variations in application.

Another unusual use of a reverb unit is illustrated in figure 12.3B. In this configuration the reverb is placed *before* a VCA. At first glance this appears to be nonsense, as a short envelope controlling the VCA will not permit the reverb decay to be heard. This is another "take advantage of the inadequacies" approaches which can produce some rather unusual results. A spring or plate reverb, being a mechanical device, will add its own coloration to the processed sound. In figure 12.3B the reverb is used as a coloration device. Control envelopes for the VCA have shorter durations that the total reverb time will cut off the natural decay but still allow the sound to be colored by mechanics of the reverb device. At the same time any transient activity within the sound envelope will be clouded by the reverberation process. This patch requires some experimentation with reverb time and envelope setting but can add some life to dry sounds without the tyical rainbarrel reverb sounds.*

Electronically produced echo and reverb is possible through a variety of instruments. Each of the following processes involves the same principle of storing a sound or sequence of sounds, then reproducing them an instant later. Independent of the technique used, the process is referred to as "signal delay."

*This technique was utilized by Allen Strange in the production of the pre-recorded tapes for *Vanity Faire* (Champaign, Ill.: Media Press, 1969). See Chapter 15, pg. 238.

1. Note that the term "echo-send," in most cases is a "reverb-send."

*Other patches for processing reverberation are discussed in Danny Sofer's "Synthesis—Ambience: Part Two," *Synapse*, vol. 2, no. 5, March/April 1978, pp. 43-44.

Tape Delay

The most common electronic delay technique is with magnetic tape.[2] Electronically-produced echo is possible from a variety of sources, all of which operate on the same principle of delayed reproduction of recorded events. By recording an event on magnetic tape and then subjecting it to playback via several individual and evenly spaced playback heads, a fairly accurate simulation of natural echo can be produced. As the recorded event comes in contact with each successive playback head, it is repeated and gives the effect of being a reflection, as in acoustically-produced echo. The speed of the echo is often a function of the speed of the tape and the distance between the playback heads. The number of echoes or repetitions depends on the number of playback heads being monitored. If the purpose is to simulate natural echo, the output gain of each successive head will have to be set in an exponentially decaying manner, as are the successive reflections of natural echo. Care must also be taken to ensure that the playback heads are spaced at precise regular intervals so that the repetition rate will be constant (figure 12.4). This is not to imply that irregular echo patterns are not always effective, only but to say that natural echo is usually characterized by some sort of reptitive pattern. The disadvantage to this method of multiple head echo is that the composer may find that there are not enough playback heads for prolonged echoes.

Another approach to the production of tape echo is with a three-head tape recorder (one with separate record and playback heads) and feedback circuit. If the event is recorded on a machine with separate record and playback heads, it may be monitored an instant later through the playback head by using the tape-monitor provision. If it is possible to monitor both the input and playback head at the same time, the effect will be of a single reflection, with the intervening time between the original event and the repetition again dependent on the tape speed and the placement of the playback head. On professional machines the distance between the record and playback heads will vary from 1.25 inches to 2 inches (approximately), making possible a delay time of from .166 seconds to .266 seconds at 7½ ips and from .083 seconds to .133 seconds at 15 ips. The patching configuration for a single repetition is illustrated in figure 12.5.

If the input signal is not monitored the effect will only be a delay between the initiation of the signal and the actual sound. The repetition is a result of hearing both the initiation *and* the delay. Repetition of a steady state sound is usually not very effective. A continuously sounding "C" mixed with a delayed continuously sounding "C" only produces two continuously sounding "C"s. The patch will be more effective if the sound is a short duration or continually changing pitch. Some care will also have to be taken to balance correctly the loudness of the original and delayed signal. Normal echo is characterized by a softer delayed sound. This is readily accomplished by adjusting the respective input gains on the mixer. There is no reason that the original sound could not be softer than the delay. Again, this should be adjusted on the mixer so that the level of the input signal to the tape recorder is not affected.

2. There is documentation of signal delay techniques using phonograph discs, but this process is inferior to the current delay processes.

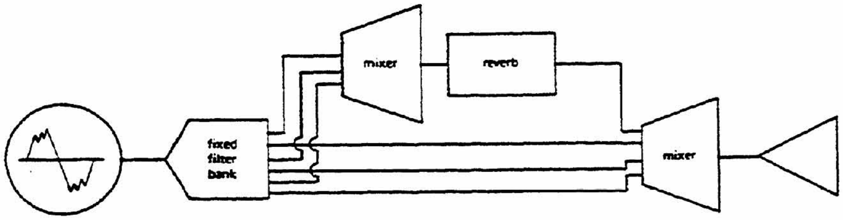

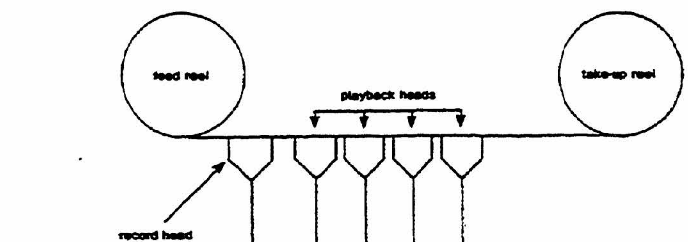

Figure 12.4. Tape echo with multiple heads

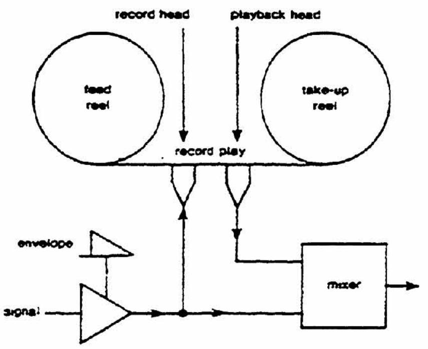

Figure 12.5. Single repeat tape delay

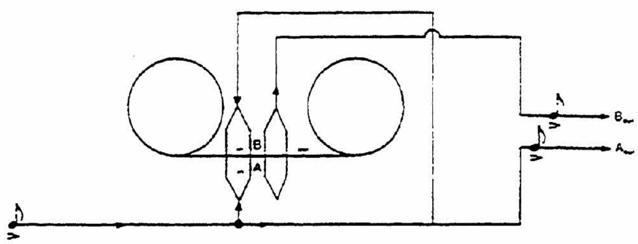

Figure 12.6. Two channel bounce

Figure 12.6 is a single repetition patch, but in this case the echo is *bounced* to a different channel. The original unrecorded signal is taken to channel A of a stereo monitoring system and delay is taken to channel B.

Non-repeating delays are often used in series with artificial reverberation devices (see figure 12.7). In a reverberant space there is often an audible time delay between the intiation of a sound and the first reflection of the reverberant information. This can be accomplished by inserting a tape delay in the signal path before it reaches the reverb instrument.

Naturally the composer is usually interested in more than just a singe echo. This can be accomplished by splitting the output signal and routing one leg back to the input circuit. In this manner the output signal is recorded, played back at a given instant later, and then re-recorded to be played back again at the same interval of time later. The speed of the repetitions again depends on the intervening distance between the heads and tape speed. Also, the number and amplitude of the repetitions are a function of the combined input and playback gain. If the feedback loop is accomplished by using a mixer at the input to the recording circuit, the composer can have complete control over the amplitude relationship between the input and echo. The mixing may be done with the use of a Y plug, but this could lead to a certain amount of non-linear distortion and gives the composer less control over the amplitude levels. In order to save tape, it is possible to use a tape loop as shown in figure 12.8. If the output is to be recorded, however, another generation of tape would still be needed, resulting in a minimum loss of high frequencies. This entire mechanism/circuit is available commercially especially for the production of artificial echo and is usually referred to as a "repeater" or "echo loop deck." To provide varying echo rates, these decks allows the playback head to be positioned various distances from the record head by sliding the head along a guide. The composer may even choose to calibrate the echo rate along the playback head guide. It is most useful to have the calibration in terms of repetitions per minute, in the same manner as conventional tempo-marking or in fractions of a second indicating the length of time between each repetition. If it is possible to have more than one repeater, many very interesting repetition patterns may be produced by patching them in series with each set at a different repetition rate (figure 12.9). If the playback head is moved along its guide path while the repeater is in operation, the result will be an exaggerated simulation of the Doppler effect.[3] Depending on the rate and

3. This is the observed effect of an apparent pitch shift when the distance between the sound source and the listener is continually changing. The classic example is the rising pitch of a train whistle as the train approaches a listner. This may be accomplished with a tape delay by either continually moving the playback head (if such a provision is available) or by varying the tape speed. Minimal tape speed variation is built into several consumer tape decks, or your studio may be equipped with a wide range variable speed tape deck. Both head displacement and speed variation result in reproducing the signal at a speed faster or slower than it was recorded. The exact calculation of Doppler shifts is not really relevant to mechanical control, but nevertheless the process of simulated Doppler should be experimented with. Other techniques of Doppler simulation are discussed later in this chapter.

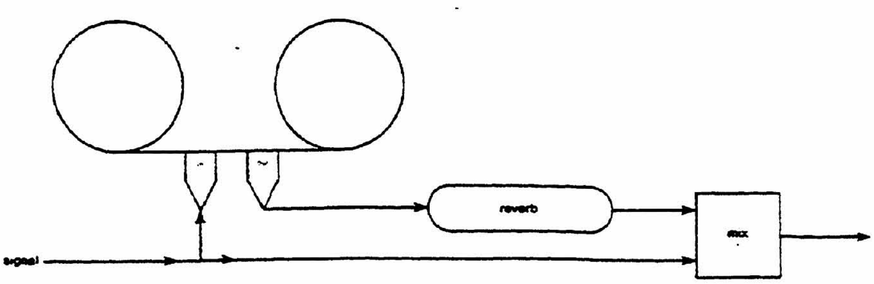

Figure 12.7. Delayed reverb

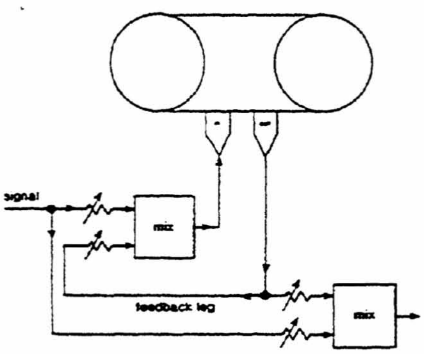

The attenuators have been rotated here to emphasize the need for correct gain.

Figure 12.8. Patching configuration for multiple echo

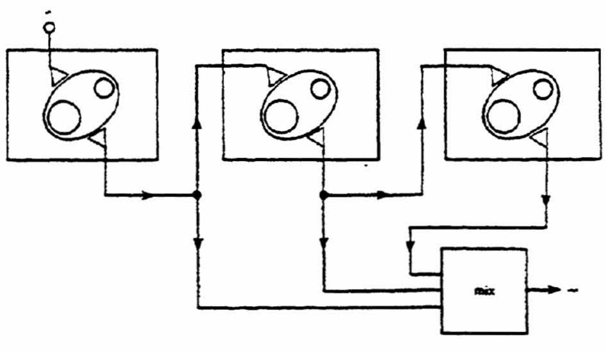

Figure 12.9. Use of multiple repeaters

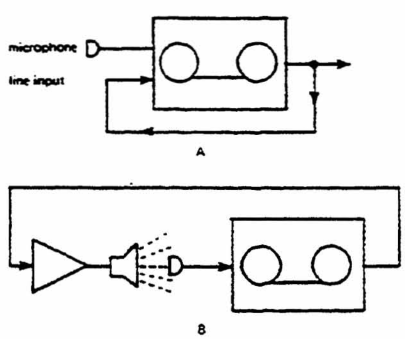

Figure 12.10. Tape echo using acoustical feedback and simultaneous microphone and line inputs

amount of displacement, the composer will find a wealth of modification possibilities which are not possible except by means of delayed feedback.

If one is recording from an acoustic sound source with an air mike, tape echo may be produced by simply splitting the line input. This, of course, requires a deck with mike/line mixing inputs. The amount of echo can then be controlled by using the line input gain control as shown in figure 12.10A. Another method of working with acoustical sources is to set up an acoustic feedback loop, with the monitor speaker providing the delayed input to the microphone (figure 12.10B). A necessary precaution to observe is the critical placement of the microphone and monitor speaker. If the microphone sound field overlaps with the speaker sound field, an acoustically-induced howl may be produced. (This type of acoustic feedback can be put to very creative uses and is discussed on page 207.) Even the electronic feedback/delay loops can result in unwanted resonances if the gain is not carefully controlled. In this case the build-up is so great that the original signals may become masked in a surge of white sound caused by too high a feedback gain. This can be controlled to a degree by careful equalization, but it will also have a definite effect on the frequency response of the output signal.

With the use of a stereo tape recorder, the tape echo can be made to cause each successive repetition to emit from alternate channels. The patching configuration used to accomplish this is illustrated in figure 12.11. This patching will pass the signal back and forth between the two channels with the repetition rate dependent on twice the distance between the record and playback heads. This time can be cut in half by simply monitoring the second channel from the input and not from the playback head. Similar cross-coupling of the channels can also be utilized with multi-track tape recorders as shown in the four-track feedback configuration in figure 12.12, a configuration that provides the composer with many possibilities of tape-echo patterns, depending on whether the individual channels are monitored from the playback head (as shown in figure 12.12) or from the input, which would halve the repetition rate to the next channel. The composer should also consider the possibility of splitting the outputs of other channels and also patching them back into the first channel or any other channel. Remember that the feedback leg must be combined with the original input signal by means of a mixer. Do not use a mult for this kind of mixing as it will cause distortion and provides no means for feedback gain control.

The use of two or more machines with the possibility of using varying speeds provides the composer with an unlimited number of tape-delay configurations. Figure 12.13 offers some other possible patchings which may stimulate the imagination. With these examples, keep in mind that the echo rate can be varied by switching from input to output monitoring. More complex patching also requires careful gain control to avoid excessive build-up or overloading.

Patch 12.13A is a simple two-channel delay. The delayed output of each channel is fed back and mixed with itself. In each case the strength or number of echos will be determined by the gain of the feedback leg at the mixer. Remember that in all of these echo patches the tape must be set for "tape monitor."

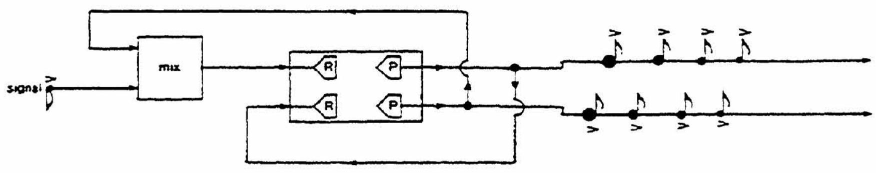

Figure 12.11. Tape echo on alternating channels

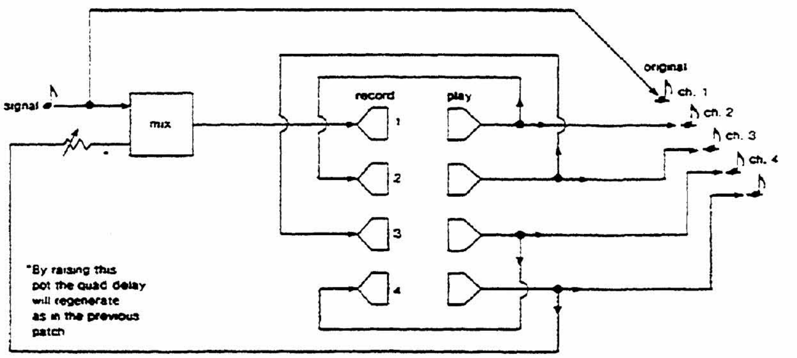

Figure 12.12. Four channel echo configuration

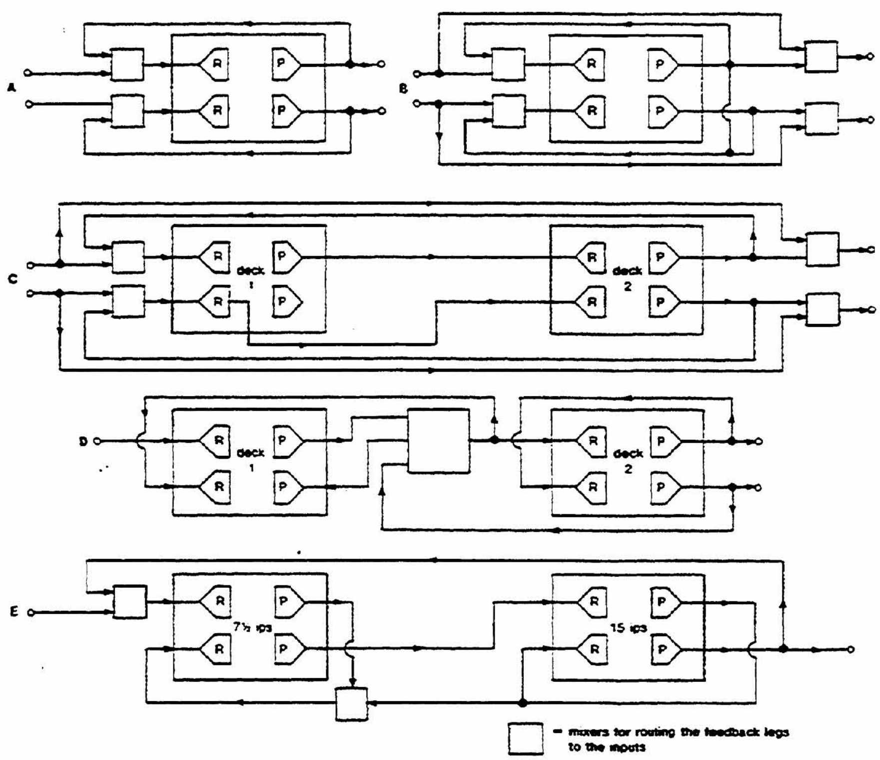

Figure 12.13. Various tape-echo configurations

The delay system illustrated in figure 12.13B involves a complex cross-channel bounce. The inputs to both channels of the tape recorder are mixed with their own delayed outputs to produce an initial repeat. The delayed output of each channel is also taken back and mixed with the input of the *opposite* channel so that the second repeat will be on the other channel.

The delay patch suggested in figure 12.13C uses two tape recorders. The delayed output of channel A of tape one is patched directly to the input of channel A on tape two. The delayed output of tape two is fed back to the input of channel A, tape one. In effect this channel has twice the normal delay as it undergoes two record/playback processes before the delayed signal is heard. Channel B is basically the same patch, but note that on this channel the "tape input" is sent to tape two. There is no delay involved with the first recording process, and therefore the delay time will be twice as short as channel A. A more efficient way of making this patch is to patch channel B's signal directly to channel B of tape two. This will improve the signal-to-noise problem caused by series recording with two tape decks. The advantage of the

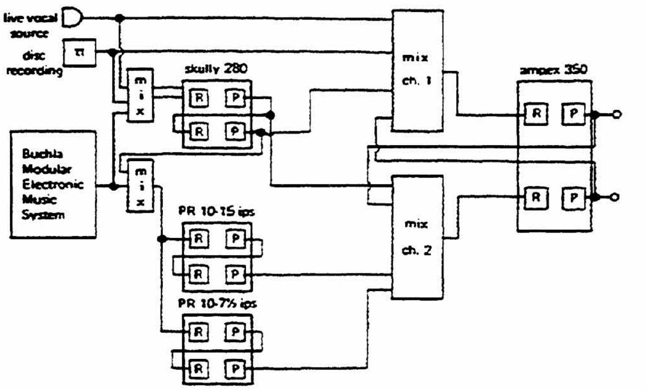

Figure 12.14. Complex patching (Patching configuration for *Beautiful Soop* by Pauline Oliveros (1967) from "Tape Delay Techniques for Electronic Music Composition" by Pauline Oliveros, *The Composer*, vol. 1, no. 3, Dec. 1969, p. 140.)

patch as notated is that the musician can immediately switch between delay times by means of the tape monitor switch. Long delays will use "tape" monitoring and shorter delays will use "source" or "input" monitoring.

The patches in figures 12.13D and E illustrate even more complex delay systems. If you have the facilities patch them up and then analyze what is taking place.

The composer could utilize even more complex configurations which also take advantage of different tape speeds and varying distances between the heads, as shown in figure 12.14.

Very slow repetition rates may be produced by using two or more tape recorders playing back a single continuous tape. The set-up in figure 12.15A illustrates how the tape is fed from tape recorder 1 to the take-up reel of tape recorder 2. In using this technique, one must make sure that the tape follows the normal threading path on each particular machine so that the automatic stop is not activated nor the tension arms bypassed. The distance between the machines determines the repetition rate, which is 1.6 seconds delay for every foot of distance between the record head of tape recorder 1 and the playback head of tape recorder 2 at a speed of 7½ ips and .8 second delay at a speed of 15 ips. Therefore, the echo rate produced by the set-up in figure 12.15A is one repetition every 4.8 seconds. Figure 12.15B illustrates one possible configuration using a combination of multiple machine-delay and electronic feedback. It is even possible to utilize three or more tape recorders for delay as shown in figure 12.15C. Composer Alvin Lucier calls for seven or eight (or more) machines for a very complex multiple delay/loop in his composition *The Only Talking Machine of Its Kind in the Whole World.*

As the composer becomes more and more familiar with delay and feedback loops, he will find that they can be a valuable tool for achieving sound modification. The mixture and superimposition of attack and decay transients will also serve to produce a certain amount of timbre modification if the levels are carefully controlled. This effect is even more noticeable

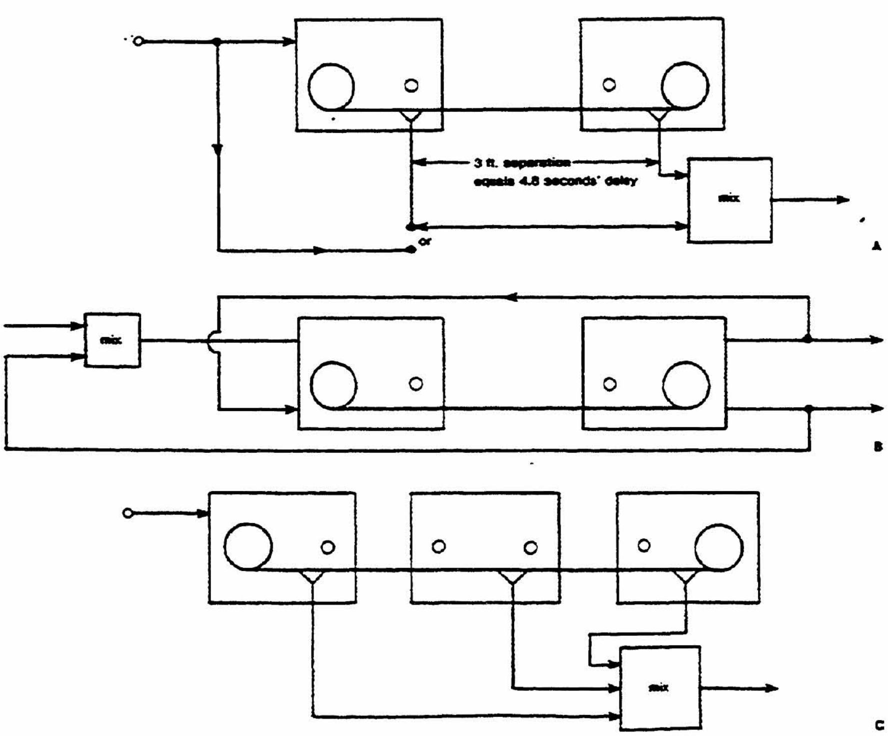

Figure 12.15. Extended tape-delay using several playback decks.

on sustained tones where the feedback results in varying amounts of phase modulation, along with the repetition of transients. Even with the use of only two channels, the maze of multiple attacks, decays, and temporal distortions will seem to fill the sound field with a cloud of sound of which the direction of origin is not apparent. The composer should also consider the possibilities of patching any of the feedback legs through any type of processing module (filter, gate, modulator, reverb, etc.) and then patching it back into the delay configuration, or using it as an output channel by itself. Tape-delay configurations produced by a variable-speed tape recorder will also provide the composer with quasi-Doppler effects, much like the results of the technique of using a moving playback head.

"Reverse echo" may be produced with either of two methods, both of which require ½ track stereo tape recorders. In one, first record the sequence of events to be subjected to reverse echo in the normal manner on tape recorder 1. Next, exchange the position of the reel so that the tape can be played in reverse on the same machine. Patch the output of tape recorder 1 to the input of tape recorder 2 and re-dub the original sequence, playing backward while adding tape echo as shown back in figure 12.8. Then, if this generation of tape is played in reverse, the sequence will be in the original direction, with the echo preceding the initial sounds. But this can be done with a single half-track stereo tape recorder with a bit more ease. Record the sequence on one channel and then turn the tape over to play it in reverse. By reversing the tape, the recorded track will now appear on the second channel. Then patch the output of the second channel to the input of the first and add echo in the usual manner, as illustrated in figure 12.16. Finally, turn the tape back over and play the dubbed sequence in its original direction, with the echo preceding the original events. If the half-track tape recorder is equipped with sound-on-sound, this technique is further simplified by letting the S-O-S switch make the connection from the output of the second channel back to the first (figure 12.13A, page 197).

Due to the increased use of tape echo, many home machines are manufactured with a built-in feedback circuit which may be switched in and out as the operator desires. Certain mixing consoles are now built with inputs and outputs especially designed for use with delay loops and provisions for additional extended delay inputs. Because of the relative ease of use of these techniques, they have come to be somewhat of a cliché with the less innovative person. This is not meant to imply that the use of tape echo and feedback is an indication of a lack of creativity, because—as described earlier—they can provide the composer with many different and unusual means of sound modification. But the composer should extend his techniques beyond the simple configurations illustrated in this book and become familiar with all of the delay/feedback configurations that his particular studio situation will allow. The reader should also refer to Pauline Oliveros' article, "Tape Delay Techniques for Electronic Music Composition" (*The Composer*, vol. 1, no. 3, Dec. 1969) for even more ideas and information on the subject.

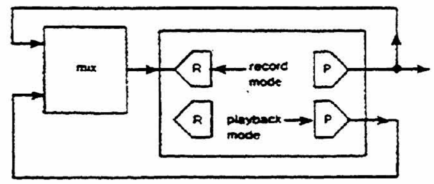

Figure 12.16. Patching configuration for reverse echo

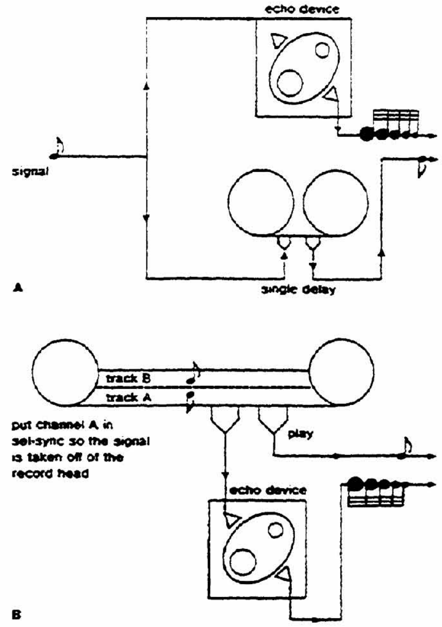

Figure 12.17. Simulated pre-echo

A novel pre-echo effect can be produced using the patch illustrated in figure 12.17. This can be done in real-time (figure 12.17A) or from a pre-recorded tape (figure 12.17B). The procedure is to send a signal directly to an echo device and then to mix the echo with a non-repetitive delayed version of the original signal. Probably the most accessible way to do this is with a three-head tape recorder.

Figure 12.17A splits the source signal, one leg going to any available delay instrument (another tape recorder) and the other leg goes to a tape recorder. If two tape decks are used, the deck employed for the echo should have a shorter record/playback gap than the other. This is done so that the echo effect is in process before the delayed signal is heard. Figure

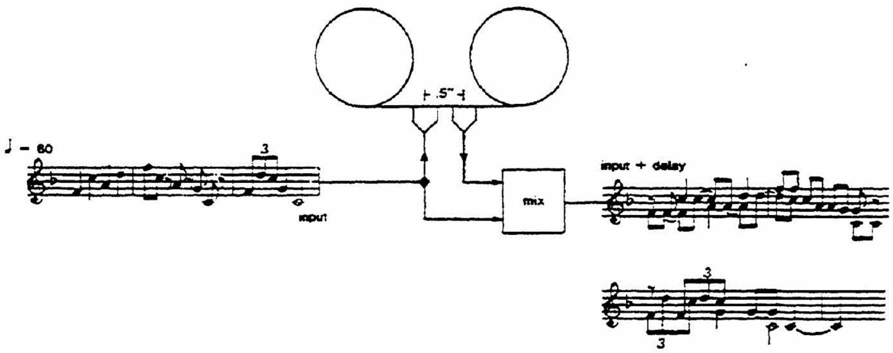

Figure 12.18. Canons with tape delay

12.17B produces the same effect from a pre-recorded tape. The tape must have the same material on two tracks. By monitoring one track from the playback head (in sel-sync) the signal will reach the delay device before the other track is heard from the normal playback head.

Remember that sonic delays operate within the musical parameter of time. Delays and echos have a temporal or rhythmic dimension which can be used very creatively. Set up a non-repetitive delay and try the following exercises. Listen to the non-repetitive delay and use the delay time as a reference beat or any division of a reference beat. In figure 12.18 the delay is .5 or one-half a second. The suggested exercise is to then play into the delay at a tempo of ♩ = 60. The delay will then be exactly an eighth-note later. This canonic relationship can then be used in the formation of complex counterpoint as illustrated in the example.

Excellent examples of live performance with tape delay used as a conscious rhythmic parameter are found in the music of Terry Riley. Two current recordings which should be studied are *Rainbow in Curved Air* and *Whirling Surgery Dervish.*[4]

Specialized Delay Techniques

Analog and Digital Delay Instruments

Relatively recent developments in analog and digital electronics have generated a class of instruments dedicated to audio delay techniques. Such instrumentation is standard equipment in most recording studios. Although these instruments, at least as of this writing, are not standard modules on all electronic music instruments, the techniques are very relevant to electronic and acoustic sound processing. A few manufacturers are making delay modules available as parts of larger systems, and in the very near future dedicated electronic delays will be as common as the voltage controlled oscillator.

An electronic delay is conceptually the same as the mechanical tape delay. A signal is stored in some form and reproduced after a controlled time interval. After the signal has been reproduced it may be used as a straight delay or may be fed back to the delay input to achieve repetitive or recursive effects. Compared to mechanical techniques, the electronic delays afford the musician greater control over the parameters involved. Depending on design, the delay time (or repetition rate) may be as short as one millisecond and as long as five seconds or more. In most electronic delay instruments, the delay time is continually variable throughout its range, and this parameter is usually controllable by any control from a synthesizer. This wider range of control has given rise to a catalog of delay techniques which can be of immense use to the musician. These techniques are usually not dependent on how the delay is produced. Certain patches, however, may lend themselves more to one delay system than another, and these considerations will be discussed where appropriate. What is important is an understanding of the vocabulary. This includes the logic of the patch used to generate the desired effect and tuning of the relevant parameters. If the process is understood, the effects may be modified and/or expanded using whatever instrumentation is available.

Analog delays store and retrieve the electronic signal without changing its format, the most common analog delay system being the tape recorder. Using the previously explained head delay techniques, a two-inch distance between the record and playback head would provide delay times of 66 milliseconds at 7.5 inches-per-second, 133 ms at 15 ips and 266 ms at 30 ips. The delay techniques to be dealt with require time delays often as fast as 1 ms, so that such mechanically controlled delays are usually not suitable for these purposes.

Electronic analog delay instruments are made possible by means of a "bucket brigade" or "charge

4. *Rainbow in Curved Air* is available on Columbia Records (MS7315), and *Whirling Surgery Dervish* is available through Shandar Records, 40 Rue Mazarine, Paris 6, France.

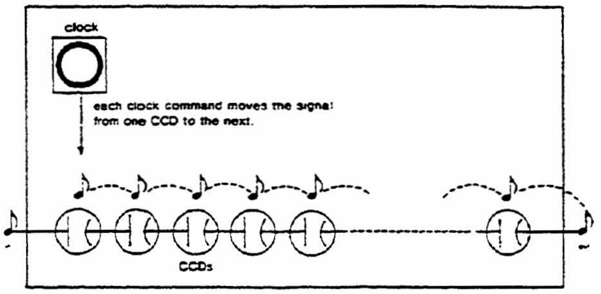

Figure 12.19. The "Bucket Brigade"

coupled device" (CCD). An analog delay line is a number of bucket brigade circuits connected in series to form what is called an *analog shift register*. As illustrated in figure 12.19, the audio signal (or a portion thereof) is stored in the first CCD, then shifted on to other CCDs in the circuit. The rate of the shift of information from one CCD to the next is determined by a clock, just as used with sequencer operations. After the signals have been shifted through all of the available CCDs, they appear at the output as a delayed signal. The delay time is determined by the number of CCDs in the circuit and the speed of the clock. While analog delay lines provide an adequate range of delay times (normally from 1 ms to around 150 ms), there are two major disadvantages. Since the CCD stores the signal as an analog electronic charge, that is, a precise voltage level, some bucket brigade delays have a low-end frequency response of around 100 Hz. This is because lower frequencies have longer wavelengths (see page 207) and more CCDs are needed to store the information. The second problem is noise and distortion. Again, since the circuit is storing a fluctuating electronic signal, the processing of the signal (the delay) can add an annoying amount of noise. Noise and distortion are not a problem in professional studio analog delay lines. The "music store" variety designed for stage performance is substantially cheaper but proportionately noisier.

Digital delay lines operate conceptually the same as analog instruments. In this case, the sound is not stored as an analog electronic charge, but rather as a series of numbers, usually in binary form (see page 76). The original electronic signal is "sampled" by a high frequency clock in the same manner as a sample/hold (see chapter 5, page 80). The magnitude of the sampled voltage is then taken to an analog-to-digital convertor (ADC) and stored as a digital number. So far this process is similar to digital storage of sequencer control voltages explained in chapter 5. Since, however, an electronic signal representing a sound is in a continual state of motion, many samples must be taken of each cycle to adequately represent the waveshape. These "samples," once digitized, are passed on to a shift register at a rate determined by the sampling clock. The digital "memory" must then be quite long to store complex signals for any usable length of time. When the digital information reaches the end of the memory, it is taken to a digital-to-analog convertor (DAC) and turned back into analog fluctuations in voltage. The total delay time depends on the speed of the clock and the size of the memory. For the instrument to have an adequate frequency response, the clock must be 2½ to 3 times the highest desired frequency. If the top frequency is arbitrarily set at 16k Hz, the clock sampling rate would be 40k Hz. The memory must then be large enough to take in 40,000 samples per second and store them for the maximum desired delay time. Each digitized sample of an input waveform is represented by a digital "word" a fixed number of "bits" wide. A memory size is measured in terms of words. The memory size required for any given delay is derived by the following formula:

memory size (number of words) =
sampling rate × *delay time*

At a sampling rate of 40k Hz a 0.1 second delay would require a memory of 4,000 words ($40{,}000 \times .1 = 4{,}000$). A 0.5 second delay would require 20,00 words of memory. The effective size of the memory is determined by an *address counter*. The address counter can be thought of as a selector for the number of increments in a sequencer. Beginning at zero, the counter begins counting sequentially up to the maximum address. When that address is reached, the counter is reset and the counting process begins again.

Some delays have multiple address counters so that several independent delay times can be read out simultaneously. Other designs have fixed multiple taps, therefore the maximum delay time determines the address of the other tapes. A common format is to have the main output which is equal to the specified delay time (DT) and auxiliary tapes at ½ DT, ¼ DT, etc. Probably the most effective delays have delay times at non-integral relationships, as this provides for denser delay patterns.

The other variable in delay time specification is the clock speed. A 4,000 word memory clocked at 40k Hz will produce a delay of 0.1 seconds. The same memory clocked at 20k Hz would produce a 0.2 second delay. Therefore, cutting the clock rate in half doubles the delay time *but* it also changes the high end frequency response. A sample rate of 20k would impose an upper frequency limit of less than 8,000 Hz! Thus any digital delay is a trade off between sample rate and memory size. The most important factor is memory size, since clock rate is usually no problem.

Recent developments in solid state memory are making extended memory devices more practical as the trend is continuing in a direction of more memory for less money.[5]

Electronic Delay Applications

The following applications are by no means exhaustive and represent only the standard techniques used in electronic and recording studios. The decreasing cost of memory is also making high quality delay instruments accessible to performers; and most of the applications discussed here can be achieved in real time. While most of these techniques were refined with digital memory, there is no reason why they could not be implemented with analog instruments, provided that the instrument has an accessible format. There are also specialized instruments dedicated to specific applications. Each application will be explained here as a patch or tuning of a generalized delay instrument. Hopefully this will encourage experimentation with available instruments.

Echo. This is no more than a digital version of tape echo. A straight signal is simply mixed with the delayed version of the same signal (figure 12.20). The only disadvantage is that the total delay time is usually no more than 0.5 seconds, although some specialized delaps produce up to 5 to 7 seconds delay. Again, anticipation of decreasing memory cost indicates longer delays will be available in the very near future. The advantages of digital echo are impressive. First of all, you have the possibility of instant change of echo rate by voltage controlling the clock or accessing a different address. If the echo is recursive, meaning a repetitive echo, the tape technique requires that the input be mixed back into the input. Consequently there is a gradual signal decay and build-up of noise. With digital recursive delays, only the digital information is "re-cycled," hence the number of echoes could be virtually infinite without any signal degradation. In effect, the digital delay could serve as an electronic tape loop!

Another application would be asyncronous echoes using two or more output addresses or taps. As illustrated in figure 12.21 the signal could be read out at two or more points in time, producing overlapping events. If the echo were recursive, speech patterns could have the effect of over-lapping each other or even changing positions in time (if they are listened to long enough!).

Digital processing of sound is rapidly expanding the sonic palate of many composers and performers. With this newly available technology processes such as automatic double-tracking (ADT), pseudo-stereo, digital reverb, recursive resonance, tunneling, etc., are common practices in a well equipped recording studio. If your studio has access to digital processing all of these processes are well explained in the manual and the techniques are specific to your equipment, hence there is no need to repeat the information here. If you do not have access to this equipment, long technical discussions would be irrelevant at this point.

Flanging. Flanging is a technique developed in the late 1950's with tape recorders. The electronic (both digital and analog) version of this technique is commonly referred to as "phasing." While these terms are often used interchangably, there is a pronounced difference between the two processes. There are presently several electronic flangers being produced by commercial manufacturers. Their advertising makes significant points about the difference between flanging and phasing, which will be discussed later.

Flanging was originally a mechanical technique and is still a very effective method of sound processing. Although the process is now available from dedicated electronic instruments an explanation of the original method is still relevant—especially if you don't have an electronic flanger!

5. For a very readable survey of digital delay technology, the reader is referred to Peter Hillen's "Computers-Digital Delay Lines," *Synapse*, vol. 2, no. 5 March/April 1978, p. 41.

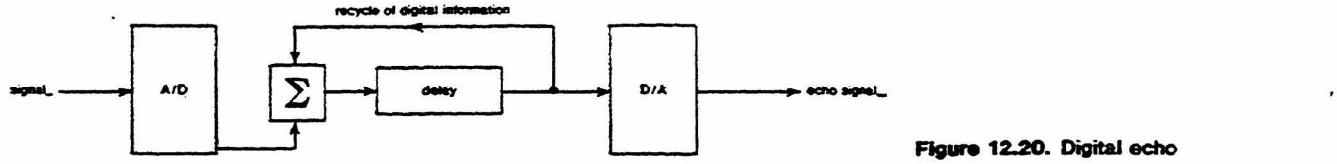

Figure 12.20. Digital echo

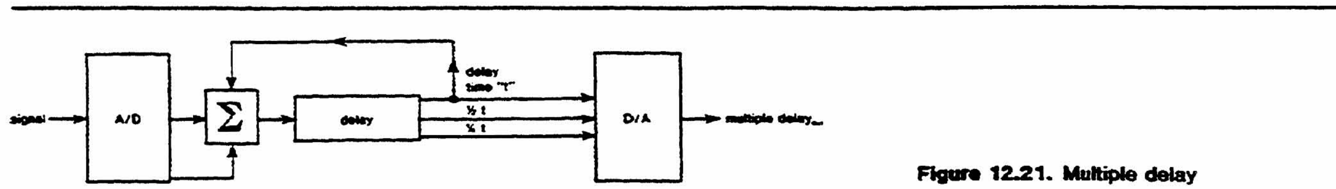

Figure 12.21. Multiple delay

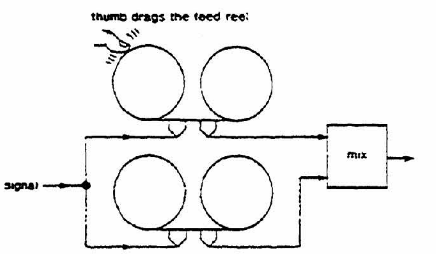

Figure 12.22. Tape flanging

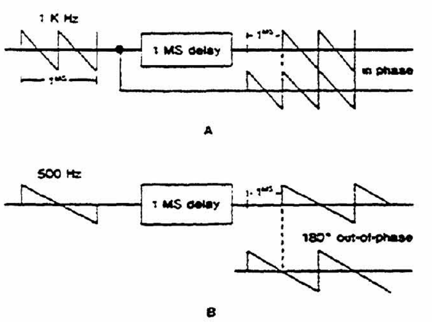

Figure 12.23. Flanging cancellation

The configuration in figure 12.22 illustrates the original flanging technique. The material to be processed is recorded in parallel on two tape recorders. The recorders should be of the same model so that there is an equal amount of head delay. The material from both recorders is monitored from the playback heads and mixed to a single channel. Originally one of the recorders was slightly slowed down by the engineer placing his thumb on the edge, or flange, of the feed reel. This very slight and momentary drag caused the material on that recorder to be reproduced slightly out-of-phase with the other tape recorder. This takes some practice since the speed variation should be so great that the perceived pitch is changed. As the two tape recorders moved in and out of phase with one another, various spectral components would reinforce and cancel one another. This effect is almost impossible to describe, but it has been called a "shwoosh," "churning," or "turning inside out" of the sound.

Electronic flanging is achieved by mixing a continually varying delay of a signal with its original. The nature of the mixing will determine the spectral cancellation process. *Normal in-phase mixing will produce cancellation of a spectral component whose period is equal to one-half the delay time.* Why? The *period* of a frequency is the time it takes that frequency to go through one complete cycle. At a delay time of 1 ms a 1k Hz signal is delayed one complete cycle (360°) because the period of a 1k Hz signal is 1 ms. Electronic flanging mixes the delayed spectrum with the original spectrum so that in this case the two 1k spectral components are mixed in-phase and reinforced (see figure 12.23A). However, with this same delay time, 1 ms, a 500 Hz signal has only a 180° phase shift. If the 1k Hz signal has a 360° shift, a signal of twice that period will exhibit one-half as much phase shift. Now if the original and delayed spectrum are mixed, any frequency components of 500 Hz will be 180° out-of-phase and cancelled. (see figure 12.23B). These cancellation points are called *notches* or *nulls*. As it turns out, all of the *odd* multiples of the initial nulled frequency will also be cancelled. (1.5k, 2.5k, 3.5K, etc.) The following formula can be quickly used to find the initial null of any flanging delay:

$$\text{initial null} = \frac{\text{TI}}{\text{delay time} \times 2}$$

The successive notches are simply the initial null frequency times 3, 5, 7, etc. For example, a delay of 8.3333 ms will produce a notch at 60 Hz which is useful for eliminating hum:

$$60 = \frac{1}{\text{DT (Delay time) times 2}} = \text{DT} \times 2 = 1/60$$
$$= \text{DT} \times 2 = .016666 \text{ so Delay Time} = .008333$$

If the delay time is negatively mixed or inversely summed with the original, the cancellation or nulls will be that spectral component whose period is equal to the entire delay time. This makes sense, as now the delayed signal, when inverted (through any available inverting circuit), is the 180° out-of-phase with the original. Negative mixing also results in cancellation of *all* of the harmonically related components of a null. Whether or not a specific flanger uses positive or negative mixing will usually be specified by the manufacturer.

So far this explanation has only dealt with fixed delay settings, which really accomplish no more than the doubling techniques explained on page 202. Flanging becomes interesting when the delay time is continually changed. Since the delay time determines the null points in a spectrum, continually varying delay will continually cancel and reinforce different parts of the spectrum. The obvious way to vary the delay is to voltage control or modulate the clock. Most flangers have a built in LFO used precisely for this purpose. This LFO is usually a sine or triangle wave with a frequency range between .05 and 20 Hz.

It is probably obvious to the reader that it would be convenient to have some sort of control over the LFO rate. This can be done manually, but most instruments provide an external input for control functions from another electronic instrument. A common patch is to control the flanging from an envelope detector. In this manner a harder attack or louder sound will produce a more active flanging effect. If this is not built into the instrument, it can always be patched in from a synthesizer.

The basic parameters of flanging require some careful consideration when using digital delays. The first

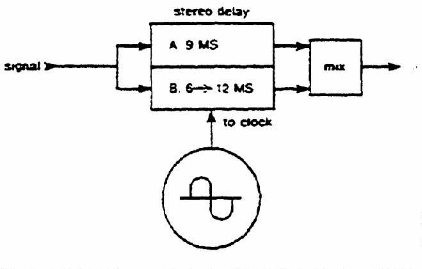

Figure 12.24. Flanging with a stereo delay

consideration is the spacing of the nulls. Null spacing is determined by the delay time and you will probably find this most effective between 0 and 5 ms. Full fidelity flanging is done with a stereo delay as illustrated in figure 12.24. Channel A is set at a fixed delay of about 9 ms. Channel B is the variable delay which is continually changed between about 6 and 12 ms. As the variable delay crosses the fixed delay, a sharp flanging effect is created. Other delay relationships can be used to place the nulls in different frequency ranges. The general guideline is that the variable delay is between one and one and one-half times the fixed delay.

The second parameter is that the null frequencies must continually be changing according to some control: either manual or from a programmed source on a synthesizer or micro-computer. Here is where the real creativity comes in. The commonplace sweeps and swooshing which once were so unique are beginning to lose their "other reality" associations. Think about flanging rhythms, even in a thematic sense within a composition. Speed and pattern are your decisions, so use them in a creative manner.

The third parameter is the depth of the flanging. For the deepest nulls the gain of the input and delay signal must be exactly equal. It is at this point that the phase cancellation is at maximum. This being a variable one can then play the depth by controlling the feedback gain.. Consider the possibility of using a VCA in the feedback leg to voltage control the depth. This now presents the possibility of voltage control null placement *and* depth which can be as controlled, random, correlated or independent as your compositional processes require.

The final parameter is so obvious that it is often overlooked. Like filtering, flanging is a modification of the spectrum, therefore make sure there is something to modify. A flanged flute is not as effective as a flanged orchestra!

Phasing. Phasing instruments grew out of an attempt to simulate mechanical *flanging*, and the terms are often used interchangably. There is a pronounced difference in the effects, and the distinctions will be explained later. In general, the phasing or flanging effect is described in the literature as a "swooshing," "churning," "turning inside-out," or "the jet plane sound"! The sound is so uniquely electronic that there are no satisfactory acoustic models which present meaningful analogies. Phasing is similar to flanging except that the "churning" effect is not so pronounced. The phasing process involves generation of dynamic *comb filtering*. As illustrated in figure 12.25, a series of nulls are placed in the sound's spectrum; each null represents a point of signal cancellation. As these nulls continually move up and down through the audio spectrum, they cancel different portions of the processed sound, producing the characteristic phasing effect.

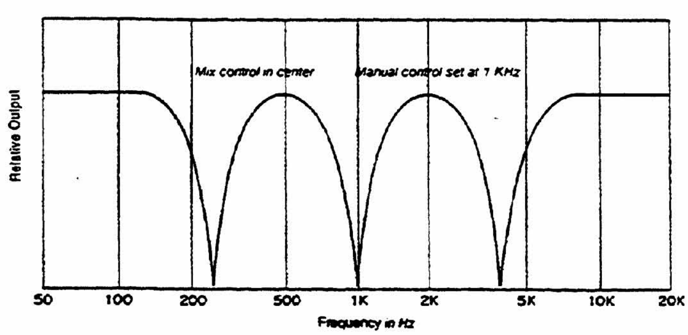

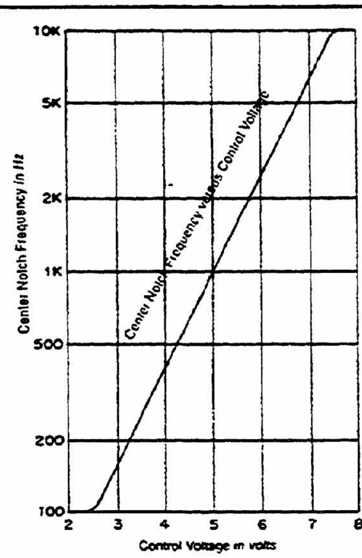

Figure 12.25. Phasing (From the Auto Phaser Spec Sheet, MXR Innovations Professional Products Group. Use by permission.)

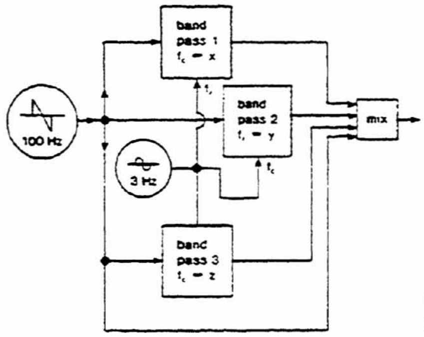

Figure 12.26. Phasing simulation with filters

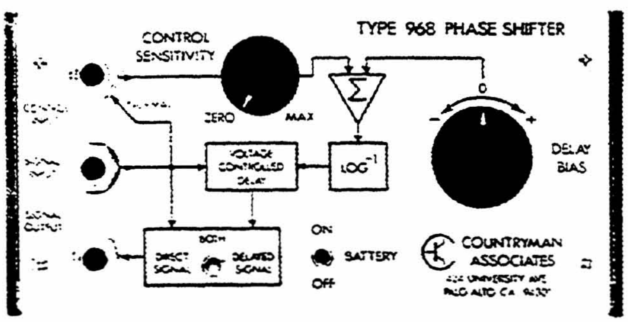

Figure 12.27. The Countryman Phase Shifter (Courtesy Countryman Associates. Used by permission.)

An explanation of this process is perhaps best made with filters and can also suggest an alternate phasing method if you don't have dedicated phasing instruments. As illustrated in figure 12.26, a spectrally rich signal is taken, in parallel, to three or more band pass filters. The filter outputs, the three pass bands, are mixed at unit gain with the original unprocessed spectrum. Each filter must be offset to a different center frequency, and the band width should be as narrow as possible. The filter should not, however, be allowed to go into oscillation. A slow repetitive control voltage such as a sinewave from a LFO will then cause each filter to sweep through the applied signal, selectively passing different portions of the spectrum. Since each filter is processing the same signal at different offsets, the mixed result is three different continually varying pass-bands. In chapter 9 it was explained that the filtering process produces a phase shift in the signal, and this shift is most critical at the center frequency. The amount of phase shift is also dependent on the frequency of the pass-band signal. Therefore, when compared to the original unfiltered spectrum, the three pass-bands exhibit varying degrees of phase shift. By mixing the pass-bands with the original spectrum, there will then be varying degrees of phase cancellation in the signal, producing continually varying multiple notch cancellation or nulls. The effect will be more pronounced if the control voltage for each filter is attenuated a bit differently so that the nulls are not exactly in parallel. If you have the facilities to make this patch, try using three different control LFO's at different rates. Also experiment with other types of function generators for the control voltages.

Phasing may be done with three or more notch filters by simply mixing the outputs and eliminating the mix with the unprocessed spectrum. The band-pass approach is probably more practical due to the availability of band-pass filters. The more filters one uses in the patch, the more pronounced the effect will be. Dedicated phasers produce up to six nulls in the spectrum, but three nulls will be quite effective.

Dedicated analog phasers are based on a similar technique using "all-pass filters." The all-pass filter seems to be a redundant term because if "all" the spectrum is passed, no part of the spectrum is being filtered! The circuit, in effect, is a relatively wide band phase shifter. A signal is patched to a number of these circuits and their outputs are mixed to produce the various nulls. Most commercially available phasers have an internal manually controlled oscillator to control the phasing rate. This VCO can usually also be voltage controlled by any standard synthesizer function generator. In some instruments, the phasing rate or pattern can be determined directly by an external control signal. The *depth* or amount of perceived phasing is controlled by the mix relationship between the shifted and original spectrum. The effect is the greatest when both signals are at equal gain. Such features are illustrated in figure 12.27 on the Countryman Phase Shifter.

Phasing and Flanging Compared. As mentioned earlier the terms *phasing* and *flanging* are often used indiscriminately. However, method of production and the resulting effects are quite different. Because it produces dedicated instruments for producing each process, Eventide Clockworks, Inc. addressed the problem of distinguishing between these terms in its instruction manual for the Eventide Model FL201 Instant Flanger. Rather than trying to reword an expertly written document, Eventide has kindly given permission to reprint portions of their research.

INTRODUCTION TO FLANGING*

Since its invention or discovery in the mid 1960's, the special effect known as "PHASING" or "FLANGING" has been one of the most popular additions to the mixer's repertoire. Phasing was introduced to the mass audience in the song "Itchycoo Park" by Small Faces and has been used (yes, and overused) to some extent by virtually every artist since that time. Just in case you've been on an interstellar voyage or in the Phillipine jungles since the 1960's, the phasing effect has been described by various

*From Eventide Clockworks Instant Flanger Instruction Manual. This excerpt was written by Richard Factor. Used by permission of Eventide Clockworks.

individuals as "a swimming effect," as "a jet plane going through the music," as "a whooshing" sound, as "one of the best ways discovered to cover up mistakes," and as "something that makes you think the music is circling around you." All of these descriptions have merit.

The phasing effect's versatility can be partially explained by the following facts:

1. It affects three of the most important characteristics of a musical signal—pitch, amplitude, and harmonic distribution.
2. It affects signals over a very wide frequency range, and thus applies to virtually every signal source from a bass guitar to a snare drum.
3. It produces dynamic changes in pitch, which is interesting in itself and can be used to cover up mistakes.
4. It can be used to generate a pseudo-stereo signal with interesting characteristics and little effort (pseudo quad too).
5. When used tastefully it can add a hell of a lot of interest to a recording or live performance. (When used without taste it can *still* add a lot of interest. Short of running an entire concert through a phasing device, its hard to misuse.)

WHAT IS PHASING? WHAT IS FLANGING?

The terms 'PHASING" and "FLANGING" have been used interchangably to describe the effect obtained. In point of electronic fact, there are two substantially different ways of obtaining the effect, and the effect thus obtained is also substantially different. The original effect (used on Itchykoo Park) was allegedly obtained by feeding a signal into two tape recorders, mixing the output, and then placing a drag on one of the reel *flanges* to slow down the machine. Because this method ties up two tape machines, requires 22 patch cords, and is a bit awkward (how many engineers have calibrated fingers?), several manufacturers designed electronic "black boxes" to achieve the effect with greater ease. Typically these devices accept a signal input and produce a phased output, the phasing being controlled by front panel knobs. One manufacturer (Eventide Clock Works) designed a unit specifically for recording studio applications. This unit has several methods of controlling the phasing: in addition to a front panel "$\Delta\emptyset$" control, it has provisions for using an internal envelope detector or a variable frequency oscillator, thus phasing automatically either by following the signal amplitude or in a repetitive fashion.

However, (and its a big however) . . .

HOWEVER these black boxes, for technical reasons, could not generate the same effect as the finger on the flange. And although the black boxes had many advantages which could not and cannot be duplicated by the tape flanging method, the effect was not as pronounced or "deep," and thus the tape method continued to be used when a particularly strong effect was desired. To prevent confusion, in the remainder of this article we will refer to PHASING and FLANGING by the following definitions:

PHASING: The effect obtained by using electronic phase-shift networks to generate cancellations in the frequency spectrum of a signal.

FLANGING: The effect obtained by using differential delay to generate cancellations in the frequency spectrum of a signal, regardless of the method used to generate the delay.

The consequences of the differences in characteristics are striking. Intuitively, one can feel that the flanging response should have more effect on the music, and in this case intuition is correct.

1. Because there are always nulls at high frequencies, the "jet plane" effect is more pronounced, even when the delay is fairly long.
2. Because the nulls are harmonically related, the effect on the tone of many instruments is more musically interesting. For instance: Assume an instrument is being played with a fundamental frequency of 440 Hz. It will have harmonics at 880 Hz, 1320 Hz, 1760 Hz, 2200 Hz, etc. At a delay of 1.136 milliseconds, the fundamental and all odd harmonics will be cancelled out, leaving only even harmonics. If the instrument shifts pitch, its entire tonality will change.
3. There's nothing much that can be said intuitively for advantages of sharp or rounded peaks, and since there's no simple way of comparing them subjectively, let's pass on this one.
4. The number of nulls increases as delay increases, and thus there is an overall broader effect on the input signal. It should be noted, however, that when the nulls are very closely spaced, the effect decreases since there is an averaging between the nulls and the peaks in psycho-acoustic realms. As a practical matter, useful flanging occurs in the delay range of 50 microseconds to about milliseconds, and devolves to a doubling effect after about 15 milliseconds.

Acoustic Feedback

Almost everyone who has ever worked with a public address system has experienced the effect of acoustic feedback or "microphone howl." This howl is the result of standing waves and the interference of the microphone field with the field of the monitor speaker, as shown in figure 12.28A. The feedback may be eliminated in one of several ways. The easiest is to reduce the size of the respective fields by lowering the output gain. If a higher gain is required, relocation of either the microphone or the speaker may be required. For best results it is suggested that the speaker be placed on the opposite side of the microphone, as illustrated in figure 12.28B. Even with this logistic arrangement, feedback will occur if the gain is excessively high. The most effective method of feedback elimination is by producing a slight phase-shift in the output signal, thus putting the speaker output out of phase with the microphone input and eliminating any standing waves. This method is used in large auditoriums, and such shifting circuits are now even being built into many podium amplifiers and public address systems. A very similar technique is to actually effect a very slight frequency shift of about 5 Hz. Working in the same manner as a phase shift, this will also prevent acoustic feedback.

Under control, microphone howl can serve as a unique sound source. It is a technique most evident with the many rock guitarists who use feedback to

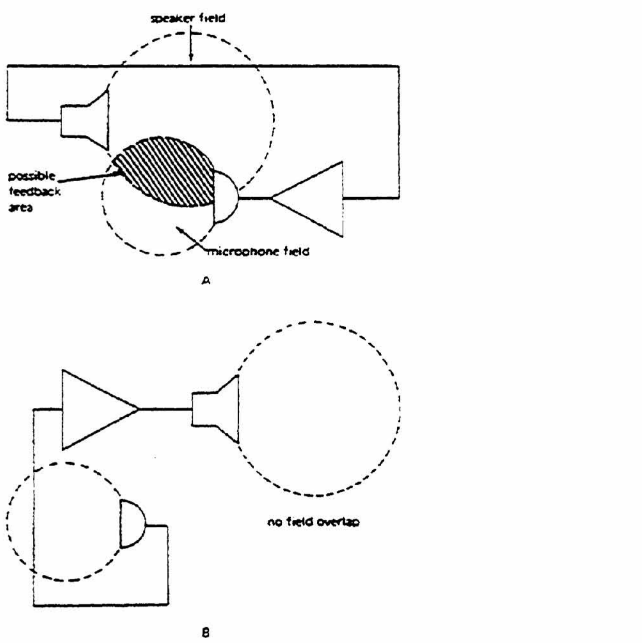

Figure 12.28. Microphone/speaker feedback fields

sustain and modify the sounds produced by their guitars. Since a guitar transducer is a magnetic or contact pickup, it is also susceptible to the influence of the field produced by the monitor speaker. If the gain is high enough, almost any plucked string may be kept in motion by acoustic feedback. Various frequencies will be more receptive to acoustical feedback, depending on the distance between the sound source and the speaker. It has been found that this type of feedback is most effective if the source is at a point which lies at a node of the particular wavelength of the frequency being produced. The wavelength of a particular frequency is found by dividing the velocity of the wave, which in air is 1120 feet per second, by the frequency in question.

$$\lambda = \frac{1120}{f}$$

The wavelength of A, 440 Hz, is:

$$\lambda = \frac{1120}{440} = 2.58 \text{ feet,}$$

Therefore the optimum placement of a string vibrating at 440 Hz for feedback is about 2½ feet from the speaker. For very long wavelengths, good results will be achieved at distances of one-half and one-fourth of the wavelength.

In much the same manner the feedback frequency of the howl produced by a microphone can be controlled by its position within the speaker field. The feedback frequency can also be changed by placing lengths of ordinary cardboard tubing over the microphone. The frequency will then have a tendency to be the same as the resonant frequency of the open tube. The resonant frequency of an open tube is found by dividing the speed of sound (c) by twice the length of the tube (2L):

$$f = \frac{c}{2L}$$

Along with frequency production, acoustic feedback can also be used as a modification process. The gain is usually so high that it in itself will result in a certain amount of distortion. Producing feedback with an air mike and singing various other frequencies can result in some interesting heterodyne effects. Robert Ashley, in "Wolfman" (Sacramento, Calif.: Composer/Performer Editions, 1968), requires a very high gain level to produce feedback and asks the performer to so adjust his oral cavity as to produce specific sounds which result in a particular kind of mixture with the feedback. (The score and recording of "Wolfman" also appear in *Source-Music of the Avant Garde,* no. 4, vol. 2, July, 1968.) The composer should also experiment with other types of acoustical instruments to find what possibilities they offer when amplified with very high gain levels. The composer will find that the type of microphone used will also be a major factor in controlling acoustical feedback.

Three Pieces for Performance

The following three scores are included here to encourage further exploration with delay and feedback. Nicolas Collins' *Pea Soup* incorporates any available voltage controlled delay to create an acoustic environment for exploration. The specific parameters are left undefined and are variable within the exploration process.

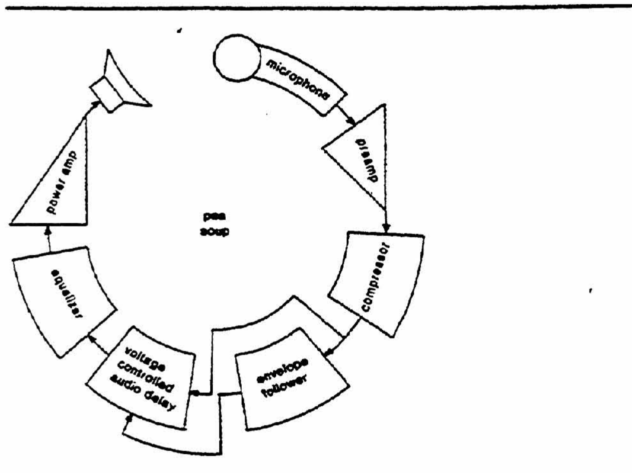

Figure 12.29. *Pea Soup* configuration by Nicholas Collins (Used by permission of the composer.)

John Bischoff's *Distant Morning Rendevous*, which can be performed with a minimum of equipment, explores some possibilities of a close proximity feedback loop with a speaker cone and a contact microphone. Joel Chadabe's *Echos* is based on the random processing of delayed sounds in a more complex score. All four scores are self-explanatory and may be performed in a studio or concert situation.

1. *PEA SOUP* by Nicolas Collins. "A self-stabilizing feedback network, made up of two or more loops of the below configuration, that creates an acoustic environment and reacts subjectively to movement and sound activity performed within it."
2. *Distant Morning Rendevous* by John Bischoff. Put together three feedback circuits using the follow-components:

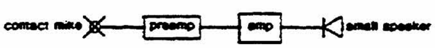

The contact microphone should be a crystal, high output type—Lafayette Radio has one for a dollar and a half called a "Harmonica Contact Microphone" (shown at right). The speaker should be only three to four inches in diameter and unincased.

The speaker is placed on its back, face up. The contact mike is set on the cone of the speaker, free to move around the cone—the vibration due to the feedback will cause slight changes in position of the contact mike. The amplifier gain is left at a level high enough to generate feedback; the circuit is activated and unactivated by plugging and unplugging the amplifier from the wall outlet (leaving the power switch "ON"). The contact mike should already be on the speaker cone whenever the amplifier is plugged in.

Locate all the A.C. wall outlets in the performance space and place each circuit next to a different outlet. Begin by plugging in all three circuits, one right after the other. At varying intervals (between five and fifteen minutes), make one or a series of the following alterations in one, two, or all of the circuits:

1. Unplug a circuit.
2. Re-plug a circuit that has been unplugged.
3. Move a circuit to an unused outlet.
4. Unplug a circuit, change the position of the contact mike on the speaker cone, and re-plug it.

Note: A wall outlet is considered "used" when one of its plugs has been used.

Once you plug the circuit in, do not change the position of the contact mike even if feedback does not occur. The piece is over when all of the outlets in the performance space have been used for at least one interval.

3. *ECHOES* by Joel Chadabe (1972).

Electronics Description

General Remarks

There are two instrumental scores for ECHOES: one for percussion and one for violin.* However, EVENINGS, for guitar solo, may be used in a version for guitar and electronics. A complete score for ECHOES consists of (1) this description, and either (2) a score for percussion *or* violin, *or* a score for EVENINGS, for guitar.

Instrumental sounds are picked up by microphone, delayed for a few seconds, transformed by an automated electronic system and selectively distributed throughout the room as transformed echoes of the instrumental sounds. Most, but not all, of the instrumental sounds are heard as echoes; the appearance of an echo is unpredictable, as is the specific nature of the pitch and timbre transformation that is the echo. That the electronic system be automated is vital to the concept of the composition: the composition is about an instrumentalist interacting with a compositional system; it is *not* an improvisation between an electronic performer and an instrumentalist.

The drawing indicates the relative positions of instrumentalist, electronics and speakers. The speakers should be high, 4 to 8 feet above the floor, depending upon the hall. The microphone should be positioned to avoid feedback. With percussion, the microphone may be hand-held by a microphonist. The electronics operators should be positioned to hear the balance between loudspeakers in the hall.

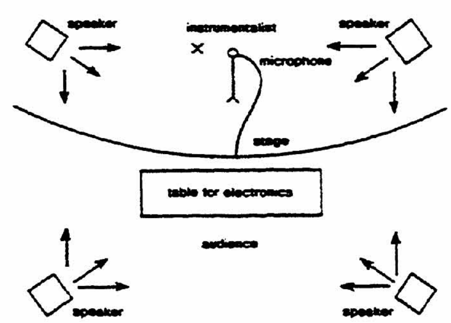

Tape Delay System

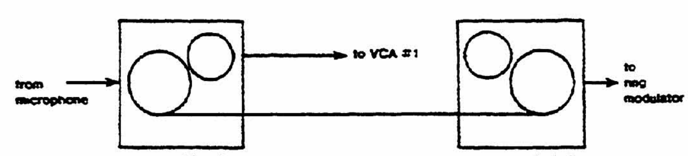

The tape is wound from the supply reel on tape machine #1 to the take-up reel on tape machine #2. The sounds are recorded at 7½ ips (19 cps) on tape machine #1, played back immediately from tape machine #1 (a delay of about 2/15 second), then played back from tape machine #2 (a delay of about 4 seconds).

*The violin version of *ECHOES* is available on CP² records (CP²/2).

Block Diagram of Processing System

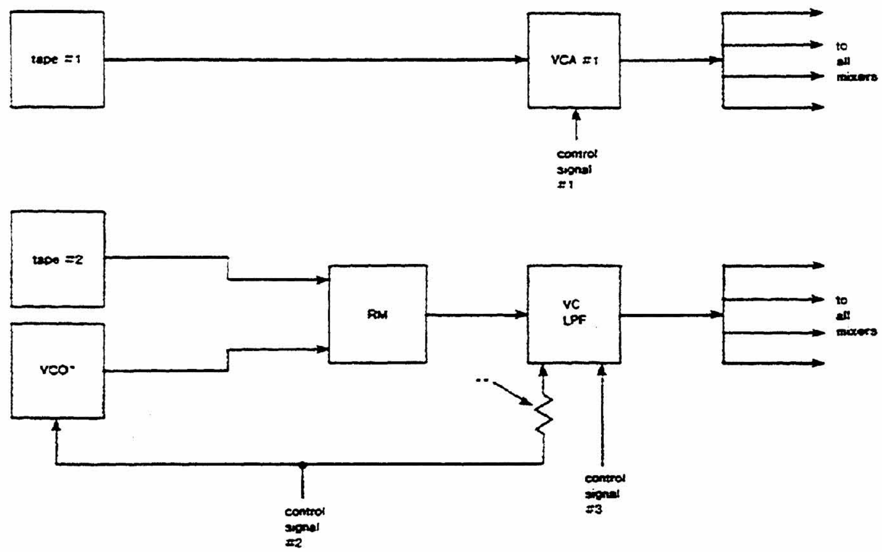

*The VCO generates a squarewave, about 400 Hz at 0 control volts

**The potentiometer is set so that the control voltage input to the filter is about 20% less than at the input to the VCO

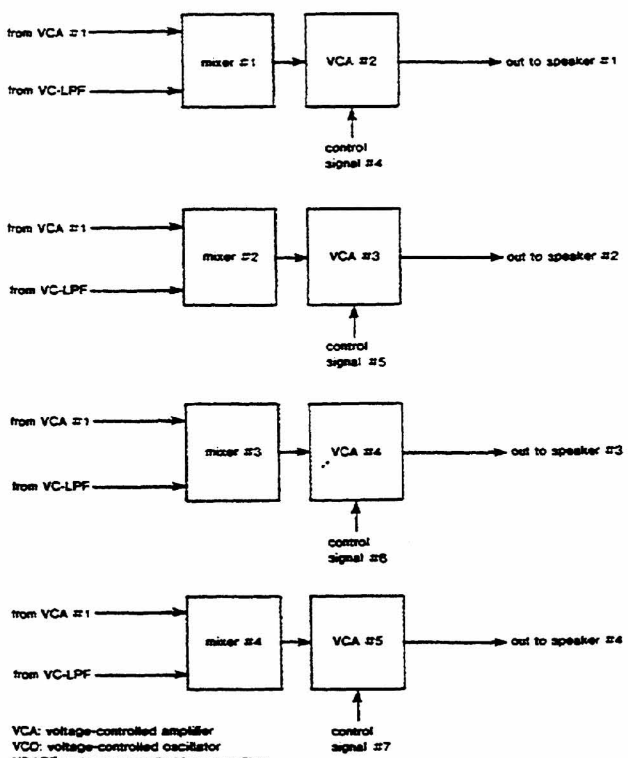

VCA: voltage-controlled amplifier
VCO: voltage-controlled oscillator
VC-LPF: voltage-controlled low-pass filter
RM: ring modulator

Note to the technician: The filter cutoff frequency should be set relatively low in the spectrum at the output from the ring modulator so that clichéd ring modulator sounds are avoided.

Control System

ECHOES has been performed using John Roy's pseudo-random waveform generator (called DAISY) as the control voltage generator: with DAISY, the levels of each of seven independent control signals are chosen randomly (from among sixteen possible voltage levels) by an automated process, and the levels change at random time intervals. The output from DAISY, which is discrete steps, is offset to produce some negative voltages, and the sharp rises and falls are changed into glides in a Moog Portamento circuit.

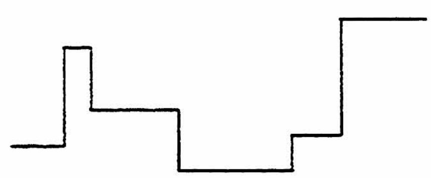

sample output waveform

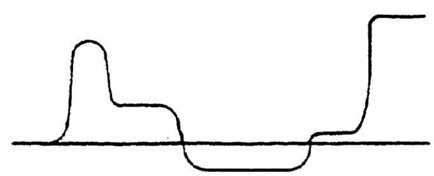

sample output waveform,
offset and through portamento

There are three controllable variables: (1) the range over which the voltage levels are distributed, which is controlled by a potentiometer, (2) the average time interval between changes from one level to another, and (3) the rate of glide between levels.

A control system other than DAISY may be used, such as sequencers or sample and hold generators, with low-frequency filters, provided that the waveform retains the above-described basic shape and unpredictibility of both level and timing.

Specific descriptions of control voltages are as follows:

Control voltage #1, amplitude-modulating the output from tape machine #1, should have an *average* change-rate of about 3 seconds, offset and range-adjusted so that the probability of a sound occurring is roughly 40%. The glide rate should be about 1 second.

Control voltage #2, frequency-modulating the VCO and controlling the filter to track the VCO, should have an *average* change-rate of about 6 seconds. The VCO should vary over a range of about 3 or 4 octaves. The glide rate should be instantaneous (no glide).

Control voltage #3, independently controlling the filter, should have an *average* change-rate of about 2 seconds. The filter should vary over a 2-octave range, in addition to changes determined by control voltage #2. The glide rate should be about 1 second.

Control voltages #4-#7 determine the distribution of sound throughout the hall. They should be completely independent from one another (asynchronous), but they should all have an *average* change-rate of about 3 seconds, with a glide rate of about 2 seconds. They should be offset and range-adjusted so that sounds are heard about 70% of the time, and so that it is impossible to predict from which speaker the sound will come.

Block Diagram of Complete System

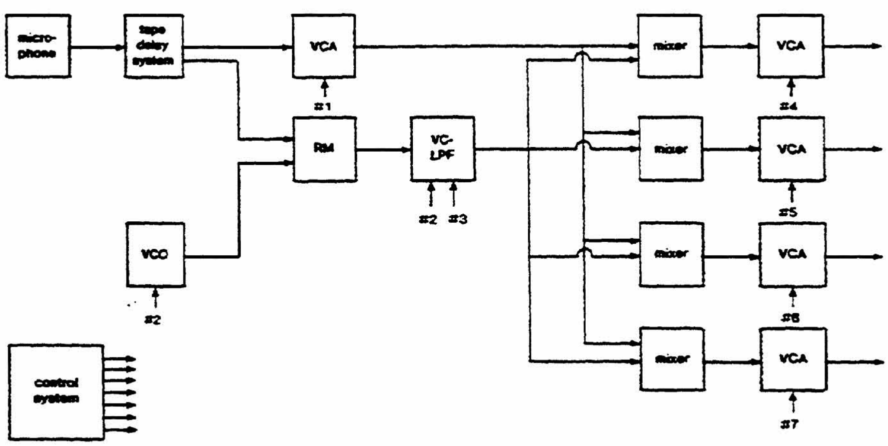

for Paul Zukofsky

ECHOES

for violin and electronics

JOEL CHADABE

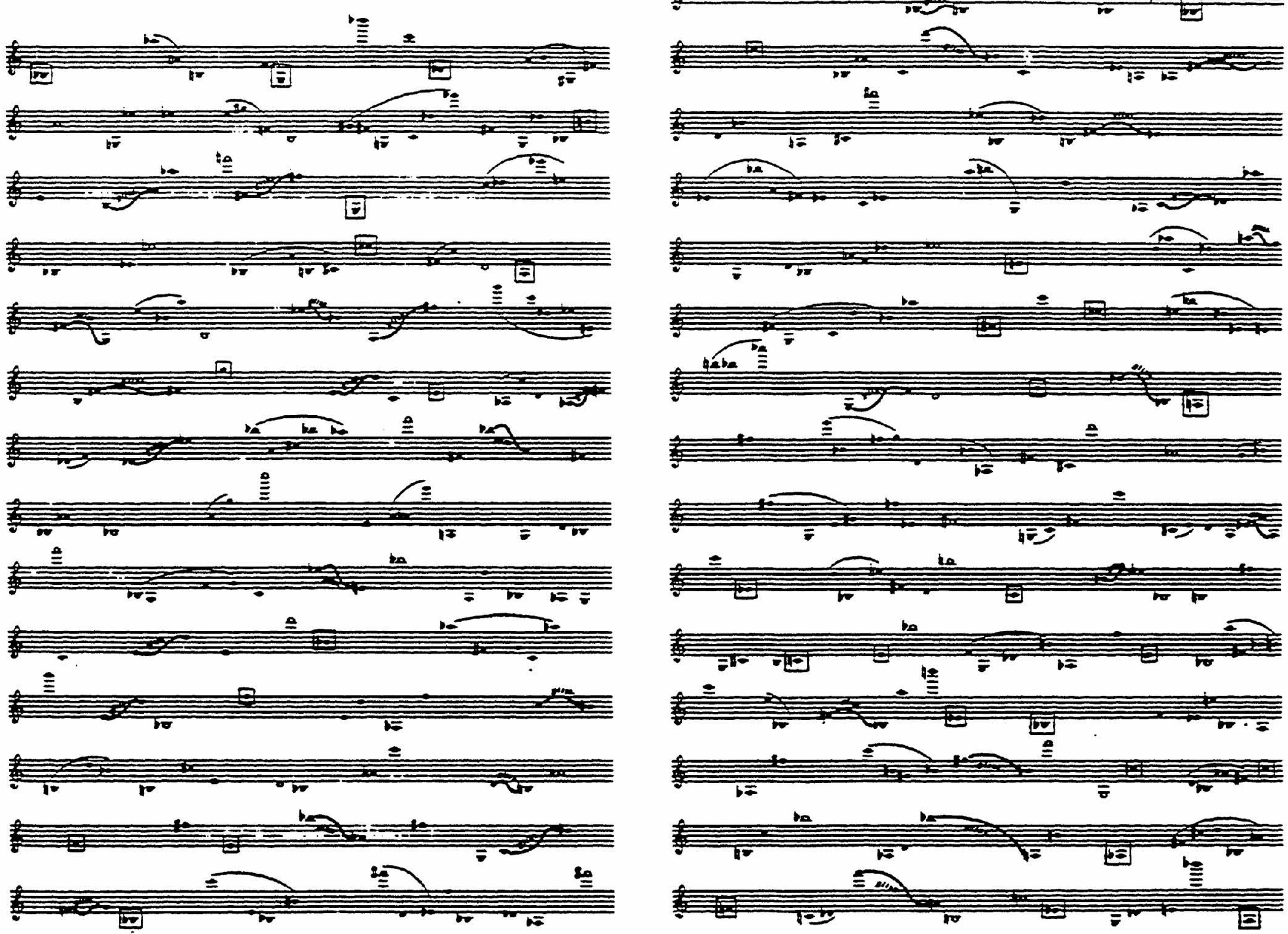

13 Panning and Sound Location Control

The history and development of music have been governed basically by what techniques the composer has chosen to include in his compositional vocabulary. The composers of early Church music were concerned with pitch as manifested in single melodic lines and two-part organum. The Renaissance composer began to add a more complex polyphony to his vocabulary. The music of the early Baroque began to utilize notated dynamics and new concepts of orchestration. Consequently, throughout the history of musical performance the musician has been required to become more and more concerned with finer aspects of sound production. Much of the music since the middle of the twentieth century has tended to isolate various parameters and to be composed basically with those aspects, leaving other parameters as sort of residual products. Many times the conventional hierarchy of parameters has been inverted—by, for example, concentrating mainly on timbre and using pitch and rhythm only as vehicle for timbral development.

A parameter which has been rediscovered in recent years is that of space. Spatial considerations are by no means new to the composer. Responsorial and antiphonal psalmody of the early vocal church music, the *cori spezzati* (divided choirs) of the sixteenth-century St. Mark's Cathedral, Mozart's "Notturno" in D Major-K 286 for four orchestras, Verdi's use of off-stage trumpets in his "Requiem" are all examples of interest in in the spatial location of sound. In many twentieth-century scores the composers give very precise instructions for exact placement of individual and groups of instruments. A composer representative of this approach is Henry Brant. Since the middle of this century Brant has been concerned with spatial aspects of performance, and his scores give exact seating and placement for the instruments. He puts forth his views and experience on spatial concepts in his article, "Space as an Essential Aspect of Musical Composition" (in *Contemporary Composers on Contemporary Music*, ed. Schwartz and Childs [New York: Holt, Rinehart and Winston, 1967]).

The Electronic Simulation of Sound Location

Early musique concrete and electronic music composers were limited in their approach to spatial considerations. With the development of multi-track recording; tape presentations were able to allocate various sounds according to speaker placement, and the refinement of stereophonic recording and reproduction now enables the composer to locate a sound source at any point within a stereo field generated by only two speakers. If two speakers are reproducing the same program with identical phase and amplitude, the sound will appear to come from a point exactly between the two speakers. If the composer wishes the sound to appear to be generated at a point to the right of center, he lowers the gain to the left speaker and raises the gain to the right speaker. With only two speakers it is possible to simulate up to five or six individual sound locations at one time in a stereophonic field by adjusting the relative output gains. Figure 13.1 shows the relative amplitude relationships for the two channels of a stereophonic tape with five evenly-spaced tracks across the stereo field. The spatial image produced by these amplitude relationships would place tracks A and E at the extreme sides, track C in the exact center, track D right of center, and track B left of center. This could be accomplished by using several stereophonic tape decks and a stereo mixer to reproduce five stereophonic tapes or, as more commonly done, dub down a composite mixture of the tracks with the correct amplitude relationships on each track. An available example of a five-track stereo image is Stockhausen's *Telemusik* (Deutsche Grammophone Records no 137012).

In addition to being able to locate sounds precisely in a stereo field, stereophony can also be used to create the illusion of a sound source moving back and forth between two speakers. An excellent example of this simulated movement is in "Her Majesty" (Lennon and McCartney) on the *Abbey Road* LP by the Beatles (Apple Records no. SO-383). Paul McCartney's

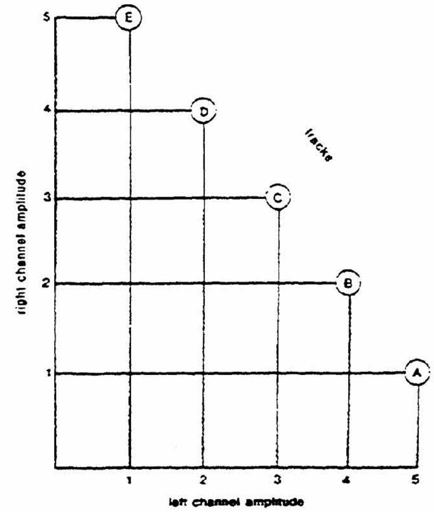

Figure 13.1. Amplitude relationships between channels for stereophonic location

voice and guitar accompaniment are first heard on the left channel and over a 22-second period the whole track slowly moves across the stereo field to the right channel.

The movement of a sound image across a stereo field is called "panning," derived from the term "panorama." The word is also used in the visual arts when a camera "pans" across a scene. In music the technique still implies a visual quality. As a sound moves from one side of a room to the other a listener will have a tendency to follow it with his eyes' as if he were actually visualizing a sonic image. This is partly due to patterned human response, but head movement is quite important in localizing sound sources.

Sound movement, as a strucural parameter, can be approached in a multitude of ways. Particular voices may be associated with specific locations in a stereo or quadraphonic space. A physical location may be correlated with other parametric activity. For example, high notes of one voice may always appear on the left channel and low notes, from the same voice, always appear on the right channel; slower rhythms can be associated with one space and faster rhythms with another; brighter timbres may be dedicated to the rear rear channels. Dynamic sound movement or "location modulation" can be used to produce thematic panning patterns. These patterns can be as simple as a gentle modulation between two channels (a spatial trill?) or they may be highly complex patterns, evolving and changing during the entire course of the composition. The reader is referred to Mort Subotnik's *Until Spring* (Columbia 54158) as a striking example of dynamic location control with analog instruments. Some of the most impressive research on sound location has been carried out by John Chowning and his colleagues at Stanford's Artificial Intelligence Center in California and at IRCAM in Paris. Digital sound generation makes it possible to control the subtle parameters involved with directionality in ways that are currently not possible with analog instruments. Analog techniques, however, are effective enough to add another layer of organization and expression to the composer/performer's craft.

But now how do you bring all this about? At this time there is not much instumentation made specifically for location control beyond the manual pan-pots (see chapter 11, page 182) on mixing boards. Consequently the musician is often in a situation where he must patch together sound routing instruments from available mixers, VCAs or switches. Sound location as a primary parameter does not enjoy the benefit of a history of or traditions, therefore the musician is also required to be creative in the truest sense of the word. Configuring the instruments, deciding what to do and then figuring out how to do it requires information dealing with the psycho-acoustics of sound directionality. The following brief overview of sound perception is by no means exhaustive but will provide enough information to begin some initial explorations. This will be followed by suggestions as to how to configure programmable sound location instruments from standard synthesizer modules. At that point the reader will have a basic understanding of how dedicated panning instruments work and several programming techniques will be discussed.

The Psycho-Acoustics Involved

The composer should consider that the electronic movement of sound is an illusion. The most effective manner of location modulation is to physically move the sound source during a live performance. At the same time, the composer should remember that a media must be dealt with for what it is and what it can do. He may spend a great deal of time attempting to "synthesize" the sound of a bassoon. If that sound is then used to do something a real bassoon could do just as well or better, then the time was spent only as a technical exercise. If that sound was used in a manner which is technically impossible with the bassoon, however, then the composer was certainly justified in its synthesis, and any small flaws in its realism are often masked by the produced effects. By the same token, electronic control can go beyond what can be done by having performers move about an environment with sound sources. Although many of these techniques are not 100 percent effective as a simulation of acoustical sound movement, they still present the composer with many new processing possibilities and provide him with a control over an often neglected parameter.

Perception of sound location involves four different kinds of information: horizontal angle cues, vertical angle cues, distance cues, and velocity cues. Horizontal or lateral angle cues are derived from the phase and intensity of a signal. As explained earlier the location of a sound can be judged largely by its loudness. If the sound is being produced at some point to the right of the perceiver, the sound will be louder in his right ear than in the left. Frequencies below about 1k Hz, however, have long wavelengths and these sound waves are diffracted around the head so that in many cases the intensity is equal in each ear. In this case the perceiver must rely on other cues for sound location. For frequencies below 1k Hz, and especially those between 200 Hz and 800 Hz, the prime cue is phase. Even if a long wavelength is diffracted to reach both ears with equal intensity, one ear is going to receive the sound before the other. These time differences are so small that they are actually differences in phase. If a sound is being produced at a point to the right of the perceiver, the phase of the signal at the right ear may be x° of the phase of the same signal as it reaches the left ear. Higher frequencies display shorter wavelengths and the head acts as a "sound shadow" to make the shorter wavelengths more directional to one ear or the other. Consequently, higher frequencies are much easier to locate as far as point of origin is concerned, with intensity being the primary cue. This is especially true of frequencies around 5k Hz. But this information is a bit misleading when working with electronically manipulated sound. Location control within a stereo field in effect uses the relative loudness of the speakers to produce the relative loudness of the signal in each ear. Due to the extreme directionality of higher frequencies, more pronounced differences in intensity are required for them than for lower frequencies. Various experiments have also shown the sine waves are more difficult to locate than waveshapes with higher harmonic and nonharmonic overtone content. Sine waves in the range of 3k Hz are very difficult to locate because the frequencies are too high for effective phase discrimination and too low for effective intensity discrimination. It has also been demonstrated that transient signals such as trills are easier to localize in a dynamic panning situation. There are several theories concerning cues for vertical discrimination of sound location. One theory set forth by Hans Wallach states that the direction of the source of a sound is cued by a sequence of lateral angles perceived by the listener as he moves his head toward the direction of the sound (Hans Wallach, "On Sound Localization," *Readings in Perception*, ed. Beardslee and Wertheimer, [New Jersey: D. Van Nostrand Company, 1958], pages 476-483).

Some more recent reseach has suggested sound elevation cues come from spectral modifications in the perceived sound. This is explained as a physical filtering effect caused by the ear's pinna.[1]

The distance from a sound source is cued by the ratio of reverberated sound to the direct or nonreverberated sound perceived at a given point. If a sound source is some distance away, there may be X number of surfaces which can reflect the sound before it reaches the listener's ear. If the same source is moved closer to the listener, there will be less reflected sound perceived and more direct sound. Reverberation cues can also aid the angular placement of sound. If the source is located slightly to the left of center in the left channel, along with a higher gain, it should also exhibit slightly less reverberation. This, of course, will also give the sound the effect of being less distant in relation to its radial axis. John Chowning of the Stanford University Department of Music describes this as "local reverberation." (John Chowning, "The Simulation of Moving Sound Sources," paper presented at the 38th Audio Engineering Society Convention, Los Angeles, California, May, 1970, Audio Engineering Society. Reprint no. 726). The overall reverberant signal is referred to as "global reverberation" and is one of the primary cues for simulating the overall space of the reproduced environment. Therefore, with increasing distance, the ratio of the local reverb to the global reverb becomes greater. This increase in local reverb is not linear, since the ratio increases at a faster rate as the distance increases. An increase in distance is also characterized by a gradual loss of low frequencies. This often presents problems because of the cut in response at the high end of the spectrum which is characteristic of artificial reverberation units (see chapter 12).

The final dimension of sound location is its speed or rate of change on the lateral and vertical axis (angular velocity) and rate of change in proximation (radial velocity). A change in reverberation characteristics at various rates can be used to simulate a certain amount of depth. As the distance between a constant-frequency sound source and the perceiver diminishes, the sound pressure waves become more and more compressed and more frequencies are perceived in the same amount of time. The result is a rise in the perceived pitch. Conversely, as the distance increases, the distance between the pressure waves becomes greater and the perceived effect is a slight drop in pitch. This "Doppler effect" is the prime cue for radial velocity of a sound. A simulation of a sound

1. This research is published in an article by P. Jeffrey Bloom, "Creating Source Elevation Illusions by Spectral Manipulation" *Journal of the Audio Engineering Society*, Sept. 1977, vol. 25, no. 9, pp. 560-565.

source moving toward the perceiver would then require a very slight rise in the frequency along with the correct change in the local and global reverberation ratios. It must be remembered that the Doppler effect is only present when the sound source is in motion. At the same time a greater velocity and closer proximity requires faster and greater pitch changes. As the simulated sound source loses velocity and again becomes stationary, the pitch accordingly drops back to its original frequency. *Angular velocity* is cued by the rate of change of the gain levels of the reproduction channels.

The problem facing the composer is to develop proper controls for simulation of each of these dimensions using devices commonly found in the electronic music studio. Approaching the problem in these terms means that each spatial cue must be a function of some process commonly available to the composer and performer. Intensity is a function of amplitude between two or more outputs; reverberation ratios can be a function of the relative gain of direct and reverberated signals; and phase and Doppler effect shift can be a function of phase and frequency modulation. All of these parameters can be subjected to electronic control which can be manipulated at will by the composer or performer.

Manual Control

The most common device used for moving sound is the "panoramic divider," more commonly referred to as the "pan pot," which consists of one input and two outputs with inverse gain function. If the pan pot is turned completely to the left, chanel A will exhibit full gain and channel B will have zero gain. As the pot is turned to the right, the gain to the left channel is slowly attenuated and the gain to the right channel becomes proportionaly higher. At the center position, both channels are down 3 db and the sound source appears to be midway between both speakers. Pan pots are usually calibrated in steps, each step representing a certain number of degrees of shift. If the stereo field were 90°, a representative pan pot might have 10 positions of 9° each. A larger field may require more increments or larger angle changes. Figure 13.2 is a graph illustrating the relationship between the increments and the relative gain to each channel. Various stereo mixers are designed with a special panning input which allows one of the signals to be panned or placed at any point within the stereo field. A multi-channel pan pot provides for a number of channels to be panned individually or simultaneously. The 360° pan pot contains a wiper connection which continuously rotates 360° for circular panning effects. (The 360° pan pot will be discussed later in connection with Lowell Cross's "Stirrer.")

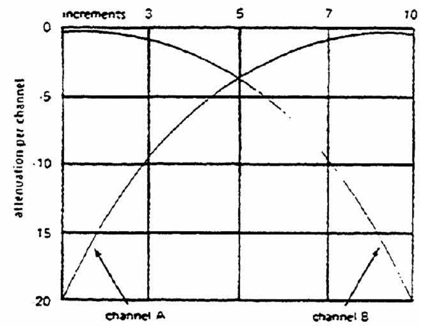

Figure 13.2. Relationships between pan pot increments and relative channel gain

If the studio is not equipped with pan pot facilities, panning may be accomplished in a somewhat more cumbersome manner with a stereo mixer. If each channel of the mixer is receiving identical signals, the sound will emanate from between the two monitor speakers. By simultaneously attenuating channel A and raising the gain on channel B, the sound will pan to channel B at a rate determined by the rate of amplitude change on each channel. The obvious drawback to this technique is that it requires two hands, which may prevent the operator from simultaneously controlling other functions. This technique will also require quite a bit of experimentation to be able to manipulate the pots and maintain the correct relationship. Experience has shown that this type of manual panning is easier with slider pots, but many of the regular pan pots are also available in slider formats. If the slider is placed in a position horizontal to the operator, its position will provide the operator with a precise cybernetic model of the sound location. Figure 13.2 indicates that the relative amplitudes change in an exponential manner rather than linear; therefore, manual panning achieved in the above manner will be much more successful if done with exponential pots or with amplifers set in exponential gain mode.

Another very common method of panning is done by using photo-sensitive resistors and photo-sensitive transistors. The amount of voltage allowed to flow through a photo-resistor is determined by the intensity and amount of light which is shining on its sensitized surface. If a photo-resistor were to be placed in series with an oscillator output and an amplifier, the gain to the amplifier could be controlled with a small, hand-held light source such as a pen flishlight (fig. 13.3). If two channels were to be controlled in the same manner with two individual photo-resistors, the

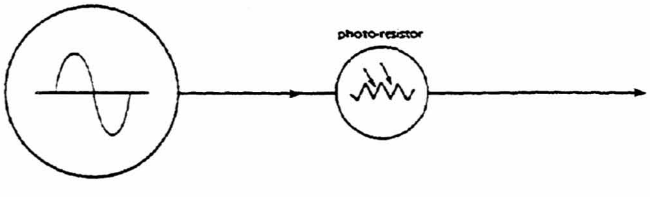

Figure 13.3. Gain control with a photo-resistor

relative gain to each channel could be controlled by passing the light source back and forth over the cells. By adjusting the relative position of each photo-resistor, the gain levels could be adjusted to produce very accurate panning effects. A four-channel photo-resistor panning device is illustrated in figure 13.4. With this configuration it is possible continuously to pan 360° around an environment, pan with figure-eight patterns or produce any other pattern, depending on how the light source is moved. Another advantage of this configuration is that it is a cybernetic model of the controlled environment. The position of each photo-resistor also represents the location of each speaker, hence the panning patterns coincide exactly with the movement of the light source. The disadvantages are that this particular device is passive and there is a certain amount of insertion loss which may be enough to require additional amplification. Also, this being a light-sensitive device, one must contend with the ambient light in the room. The best solution to this problem is to cover the photo-resistors with two adjustable sheets of polarized glass or plastic. The relative positions of the polarized material can then be adjusted to block out any amount of light, thereby making the photo-sensitive device adaptable to almost any environment. Composer Frederic Rzewski has described the construction and provides component values for a very very adequate photo-resistor panning device (Frederic Rzewski, "A Photo-resistor Mixer for Live Performance," *Electronic Music Review*, no. 4, Oct. 1967, pp. 33-34).

Photo-transistors are used in a somewhat similar manner, but the circuits are active and necessitate a power supply such as a battery. The advantage of photo-transistors is that they actually provide amplification and the relative gain levels can be finely controlled. Photo-transistors are often used in conjunction with light-emitting diodes, which produce illumination in relation to applied voltages. This of course necessitates very accurate control of voltage envelopes. This will be discussed later in this chapter.

A panning device used by several composers and performers is the "Stirrer," which was developed by composer Lowell Cross. Although this particular device is not commercially available, several have been

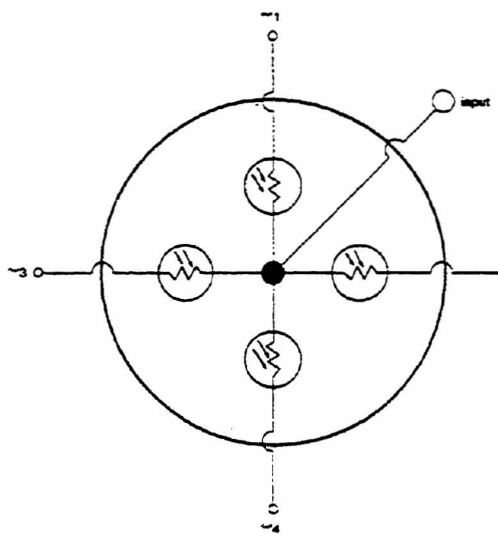

Figure 13.4. Photo-resistor four-channel panning device

constructed according to Cross's specifications and are currently in use. The Stirrer makes use of four specially-ally-designed, continuous-rotation, 360° potentiometers controlled in synchronized movement by a planetary-gear arrangement, with the drive shaft being turned manually by a crank. Its configuration allows the composer or performer to pan four different signals around and through an environment, with the signals evenly spaced by a distance of 90°. The produced effect is that the four input signals follow each other around a space with the direction and speed determined by the direction of speed of the crank. The Stirrer is also equipped with a switching configuration which allows for several variations in the panning patterns. One such function could be to have inputs 1 and 3 moving in a clockwise direction while inputs 2 and 4 move in a counterclockwise direction. A similar function would allow for three inputs to move in one direction with only one input moving in the opposite direction. Other switching arrangements provide for various types of figure-eight patterns. (A detailed description of the Stirrer and its circuitry appears in Lowell Cross, "The Stirrer," *Source-Music of the Avant Garde*, no. 4, vol. 2, July 1968, pp. 25-28.)

Voltage Controlled Panning

AC Control

All of the panning methods discussed so far have been controlled by manual means. The advantage to this approach is that the control is very cybernetic and the placement, speed, and direction can be directly determined by the operator. In live performance situations, manual control is often the preferred method. There are various circumstances, however, in which manual control is less than satisfactory. The composer is many times so involved with adjusting frequency settings and riding gain levels that his hands cannot manipulate a smooth pan effect simultaneously. Consequently, an extra dub-down is often needed, especially for the production of spatial effects—and additional tape generations mean additional loss in fidelity. Another disadvantage is that the composer may wish to move the sound at speeds beyond the range of manual control. Without the use of switching controls, manual operation also prevents the composer or performer from making truly instantaneous changes in the placement of the sound. The operator cannot manipulate the pots fast enough to avoid the movement of sound being perceived. An available solution to these problems is through voltage control, that is, making sound location, panning, and spatial modulation a function of voltage control. The essential module for panning applications is the voltage-controlled amplifier. The application of various AC and DC voltages will then provide the composer with programable means of sound movement which can be instaneously activated as they are needed.

The first method to be dealt with uses two VCAs controlled by opposite polarities of an AC signal. The information signal is split and each leg is patched to the audio input of a VCA. The AC signal which is to control the gain of the VCAs is patched to a phase splitter,[2] allowing the positive portion of the signal to be taken from one output and the negative portion from another. When these two opposing control signals are applied to the respective VCAs, the positive phase will produce gain in VCA-1 and at the same instant there will be zero gain from VCA-2. When the positive signal drops to zero volts, the negative phase then provides gain for VCA-2 (see figure 13.5). Since the VCAs are operating with continually opposing gain characteristics, the monitored signal will appear to pan between the two channels. Although a triangle or sine-wave control may be used, the triangle waveshape seems to produce more realistic effects. If a pulse wave control were to be used as a control, the sound would instantaneously jump from one channel to the other. If the pulse were in a square-wave format, the pulsing between channel would be at an even rate. By varying the duty cycle of the pulse wave, it would be possible to control the on-off time ratio of each channel. A sawtooth control voltage would gradually pan the signal from one channel to the other as a function of the rise in voltage. The instant drop to the negative polarity would instantaneously place the signal back on the first channel at a speed which would be imperceptible as a pan.

2. This may be accomplished by a mixer with a "+" and "−" output or an inverter.

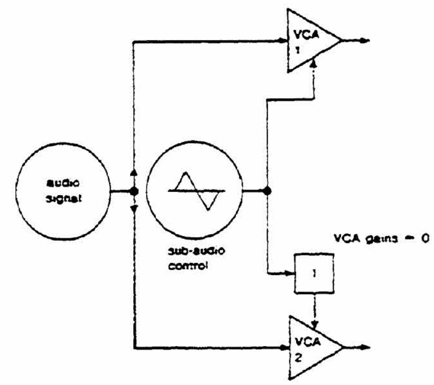

Figure 13.5. Panning with an AC control

The use of opposite polarities alone to control amplitude relationships is not completely effective, however. The problem is that there is no rise in gain on one channel until the gain of the other channel is at zero. The placement of the sound midway between the two channels requires both VCAs to have equal voltage at the same time. One way to accomplish this is to offset slightly the VCAs so that zero volts will still produce some gain in the amplifier and a certain amount of negative voltage will be required to effect zero gain. This requires some careful tuning but will eliminate the hole-in-the-middle problem.

The panning rate is determined by the frequency of the control signal. With control frequencies below 7 or 8 Hz, the perceiver will be able to follow the sounds as they move back and forth between the speakers. With control signals above those frequencies, the sounds will move so rapidly that the ear will not have enough time to respond to the location cues. Consequently, the perceived effect will be a monophonic "wall" of sound and all panning movements will be imperceivable. As the control frequency approaches the audio range, characteristic amplitude-modulation sidebands will appear, because panning is essentially amplitude modulation of a single signal between two separate channels. It is even possible to pan at rates so high that the original audio signal will become distorted. This is explained by the fact that a sound, depending on its frequency and overtone content, must last a certain length of time before it can be perceived. If a sound is being panned between two channels and only one of those channels is being monitored, the effect will be a gating on and off of the signal, with the gated envelope defined by the shape of the control voltage. If this gating is extremely rapid, the audio signal will eventually be heard only as a series of "pops." If the other channel is also monitored, the number of pops is doubled. Therefore, as the control frequency becomes higher and higher, the original

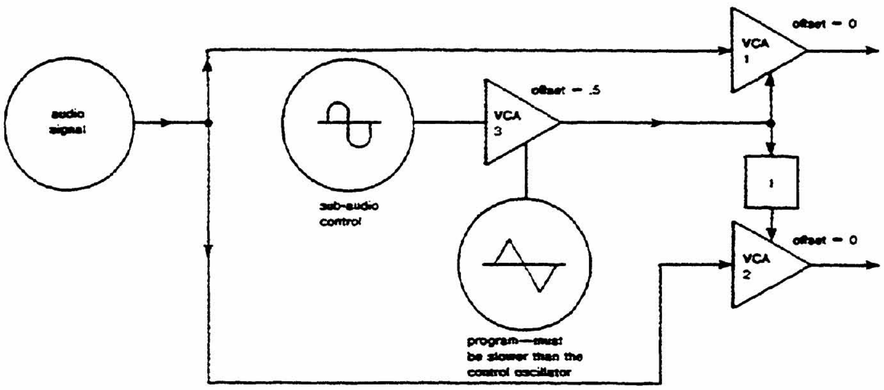

Figure 13.6. Amplitude modulation of the panning control

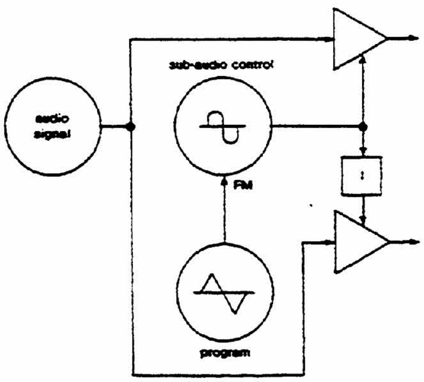

Figure 13.7. Frequency modulation of the panning control

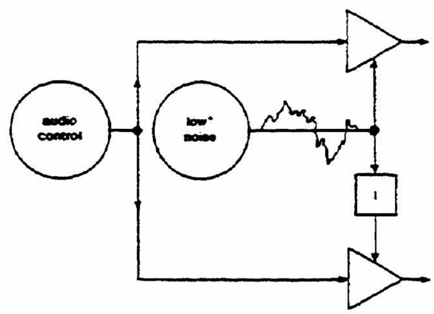

*If your system does not have a "sub-audio" or floating Random Voltage Source, try taking pink sound through a low pass filter with a very low cut-off.

Figure 13.8. Panning with random control

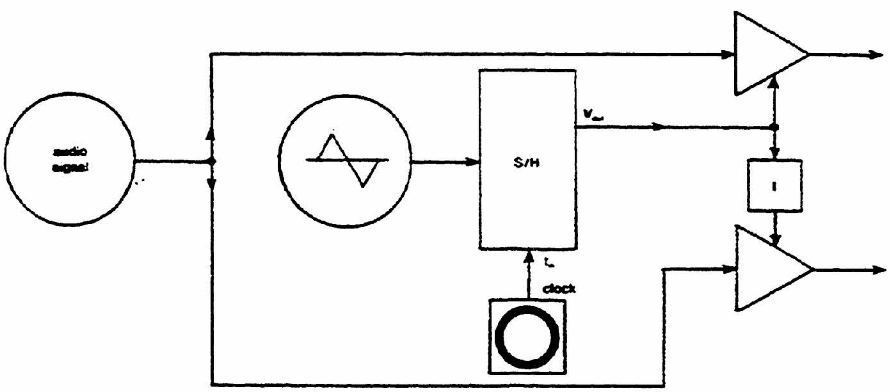

Figure 13.9. Sample/hold panning control

audio signal will tend to be dissipated into the energy of the sidebands and the prominent signal will then be the frequency of the control voltage. This duration threshold is especially critical with lower-frequency audio signals.

This technique should not be limited to control with simple waveforms. Consider the possibilities of an amplitude modulated low frequency sinewave as a control. The patch illustrated in figure 13.6 would create the effect of the signal moving back and forth at a soft level and getting louder as the program LFO increases in voltage.

Modifying the patch to a FM format would cause the sound to pan at rates proportional to the rate of the program LFO (figure 13.7).

Complementary random voltages by means of an inverter produces a unique effect. Since the gain on one channel will constantly be the complement of the other, the sound will appear to move randomly back and forth in the stereo field (figure 13.8).

The previous patches involved continual motion of the sound on the stereo axis. The patch illustrated in figure 13.9 processes the control LFO through a Sample/Hold before being applied to the invertor and VCAs. The effect here is that the sound will appear to jump from point to point across the field with each new timing pulse. The sample commands could be at a steady rate from any available timing pulse source, or the timing pulse source could be programmed by a sequencer, random voltage source, etc., to create various panning rhythms. The sampling pulses might also be generated from some external source via an envelope detector. If a Track and Hold were used to process the control, the sound would move only during the "on time" (when the gate voltage is high) of the timing command.

DC Control

The two obvious drawbacks to AC panning control is the often annoying "hole-in-the-middle" problem and the limitation of only stereo panning. Control with function generators make it possible to generate more subtle patterns and create panning among virtually any number of channels.

Attack-Decay format envelope generators may be used in several ways for stereo panning. The most straightforward method is to substitute an envelope generator for the LFO in the previous patches (figure 13.10A). A control envelope is used to control one VCA and an inverted form of the same control is used to control the other VCA. The advantage this has over LFO control are 1) a pan can be initiated on cue, and 2) there is a bit more control over the panning pattern. As illustrated in figure 13.11B, a separate envelope generator should be used for the panning control, hence it need not be correlated with the amplitude characteristics of the sound. If the panning envelope had a long attack and short decay each pitch would gradually move from channel A to channel B and quickly snap back to channel A. A short attack and long decay would create the opposite pattern.

Another stereo panning technique involves delayed triggers. The patch in figure 13.11 provides the possibility of non-symmetrical panning. This configuration requires two envelope generators and a timing pulse delay module.[3] A timing pulse is sent to an envelope generator with a hypothetical one second attack and one second decay. The same pulse is patched to a pulse delay of one second. The delayed pulse is then used to fire a second envelope generator which controls a second parallel VCA. By comparing the voltage functions you can see that the first EG causes the sound to appear on channel A. As it begins its decay the second EG causes the sound to appear on channel B. The sum effect is that the sound will effectively pan between the two channels. If the sec-

3. EGs with trigger outputs (see chapter 6, pg. 68) might also be used but the time relationships would not be quite the same.

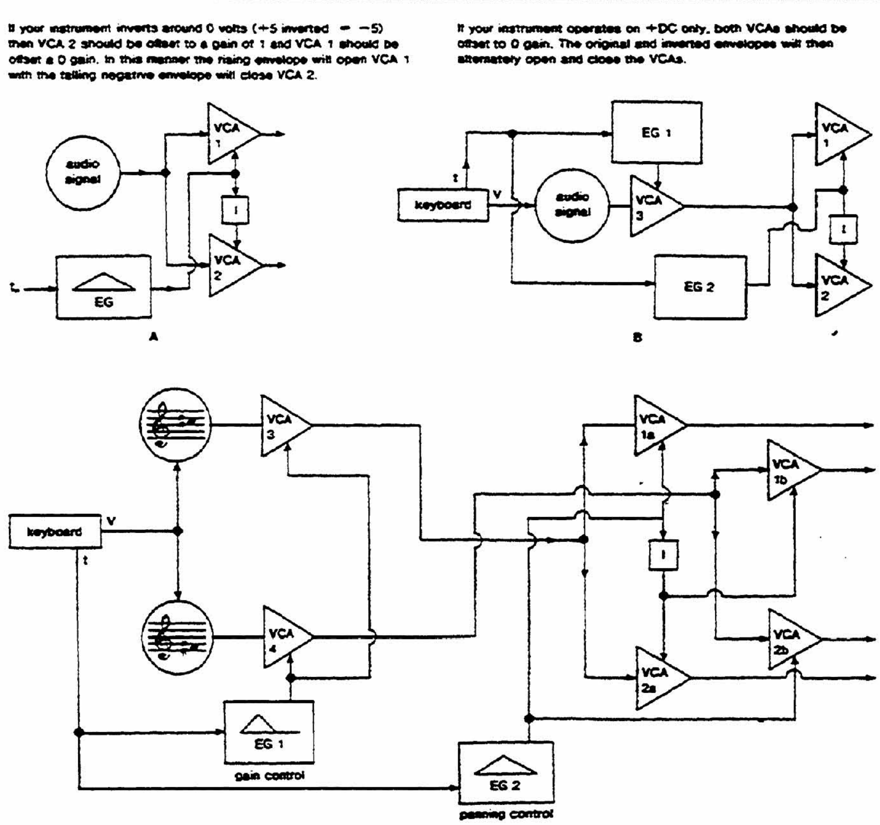

Figure 13.10. DC control of panning

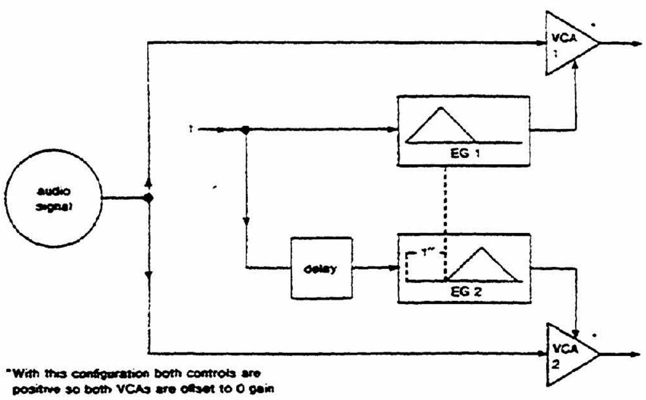

Figure 13.11. Using two envelope generators for panning control

ond EG were programmed with a sharp attack, the sound would have a one second attack and then abruptly switch to channel B. Other envelope functions would likewise produce different panning patterns.

The previous patch can be expanded to accommodate four channel or quadraphonic patterns as illustrated in figure 13.12A. In this configuration the task is to trigger the four voltage functions in series. This is best done with four series pulse outputs from a sequencer. Stage one sends a pulse to EG 1 which puts the sound on channel 1. As the sound begins its decay pulse two of the sequencer fires EG 2 which pans the signal to channel 2 as in the above patch. The third and fourth puses in turn fire EGs to pan the signal to channel 3 and 4. If the sequencer is allowed to recycle, the sound will continue to pan. The attack and decay times of the four envelope generators must be adjusted in respect to the rate of the triggers. Changing these functions in real-time can be somewhat clumsy and inaccurate. The modification suggested in figure 13.12B allows the performer to change the attack and decay functions of all four envelope generators and the sequencer's clock from a single source. The patch requires that the envelope generators have voltage controlled attack and decay times. Experimentation will show that variable panning rates require the attack and decay times to vary in an inverse relationship to the speed of the pulses. A rapid pan calls for fast triggers and relatively short envelope functions. Slower pans require slower pulse rates and proportionately longer envelope functions. By using a single control, perhaps a joystick, to control the clock rate and an inverted form of the same voltage to control the attack and decay times of all four envelope generators one will maintain the correct time constants. As with many complex patches this is easier said than done; but it is effective when once tuned

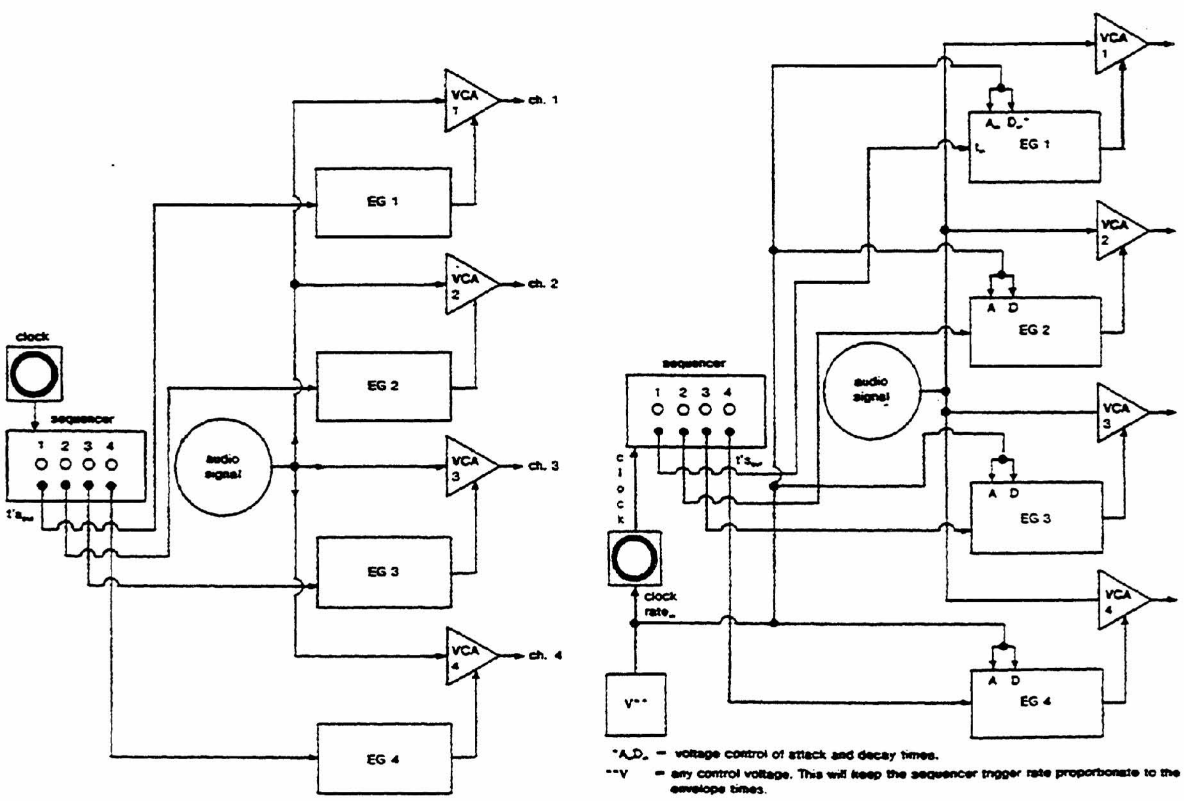

Figure 13.12. Quad panning with VCAs and envelope generators

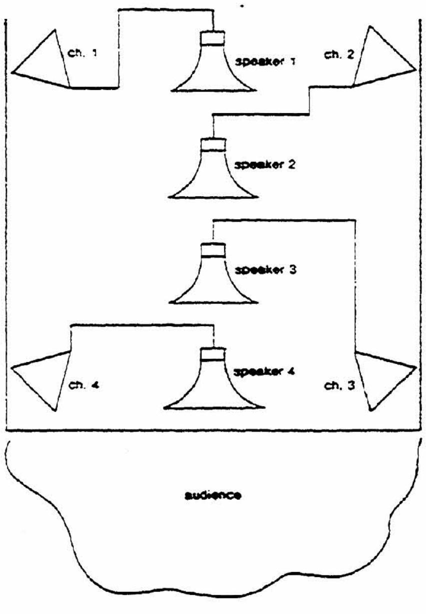

Figure 13.13. Speaker placement for radial panning

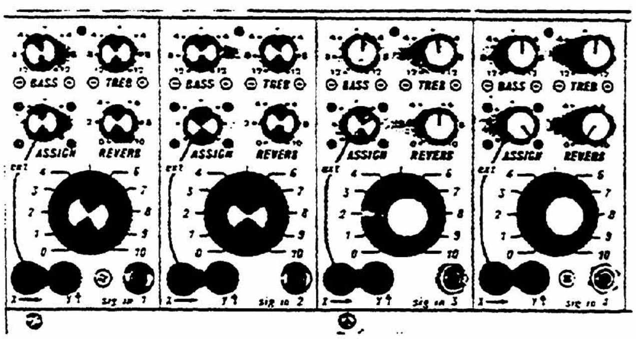

Figure 13.14A. Buchla 227 System Interface

correctly. Also consider the use of alternative forms of control. One possibility might be to pan a pre-amplified acoustic sound. If the signal were also patch to an envelope follower the voltage could be used to control the panning rate. This would correlate loudness with the speed of the sound movement.

If you have a large space to play with, give some thought to speaker placement. There is more than one way to place four speakers in a performance space. For example, you might try placing the speakers one in front of the other so that the panning is not circular but rather approaches the audience in a straight line (figure 13.13). Other possibilities are elevating certain channels above the listener, or even panning sounds throughout several neighboring rooms.

Now after experimenting with a multitude of VCAs and function generators the best thing to do is to get a dedicated quad panner! Four such circuits are built into the Buchla 227 System Interface, and single quad and stereo panners are manufactured by Serge Modular Music Systems (figure 13.14A and B). These instruments offer voltage controlled panning on an X/Y format. A voltage applied to the X input will locate a sound on the X (left to right) axis. A voltage applied to the Y input will locate the sound on the Y axis (front to back). This is clarified by the series of examples in figure 15.15A through E. Each square represents a quad field as viewed from directly above. The front channels are at the top of the field and the rear channels are at the bottom of the field. There is no universal system for numbering channels. The system I favor is to label channel 1 as being the left rear, 2 left front, 3 right front and 4 right rear.

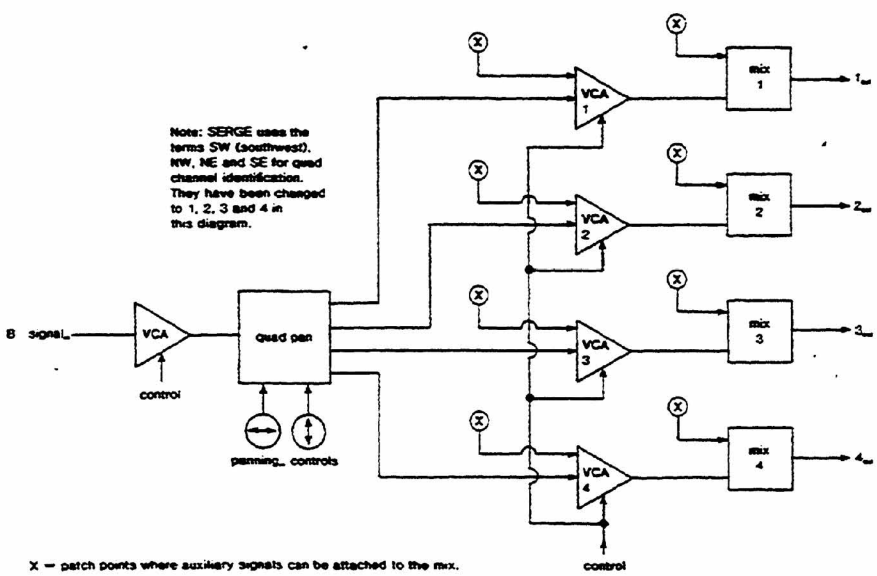

Figure 13.14B. Diagram for the SERGE multi-channel quadraphonic mixer (QMX)

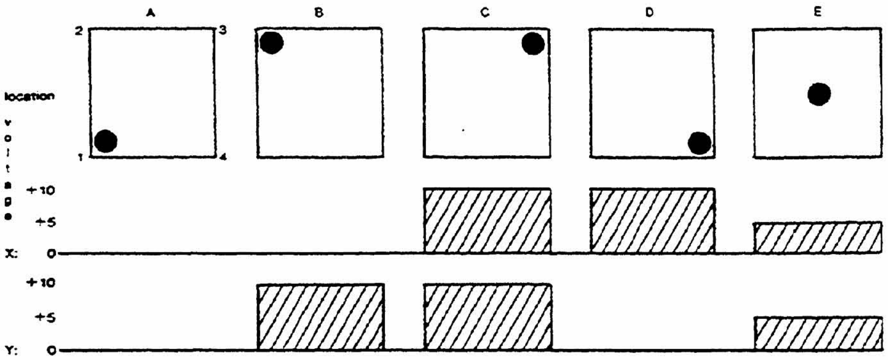

Figure 13.15. Control logic for X/Y quad panning

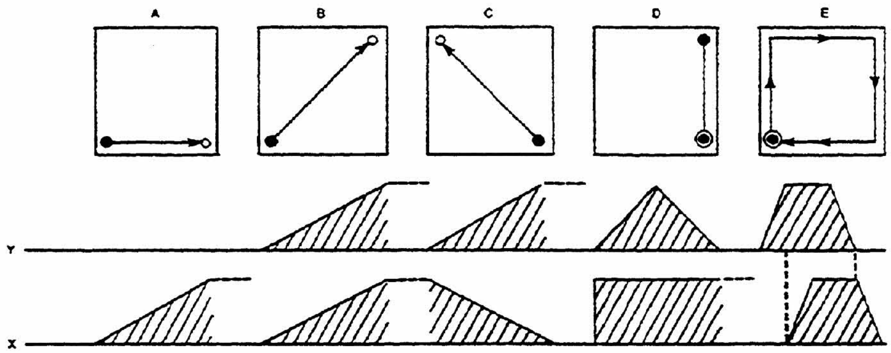

Figure 13.16. Dynamic control logic for quad panning

A circular panning pattern would then be 1,2,3,4, 1,2,3,4, etc. Referring to figure 13.15A it is shown that a control of zero volts locates the sound on channel 1. In figure B the Y voltage is increased to maximum and the sound moves to channel 2. The sound image is still on the left half of the space because the X voltage is zero. If both X and Y are at maximum the sound will come from channel 3. As Y is decreased to zero the sound will move to channel 4 (the X voltage still at maximum. In figure E it is illustrated that five volts (50% of the available range) applied to each axis locates the sound in the middle of the quad field.

Now comes the task of generating the required controls. The most simple thing to do is to use the X and Y axis of a joystick to determine the X/Y controls for the panning. This give the performer a direct physical control over image placement and motion, as does the "Stirrer" described earlier. If you have preconceived "composed" panning patterns in mind you might as well get some programmed functions to do the work for you. The patterns illustrated in figure 13.16 can be done with two envelope generators.

In example A a long attack from and EG patched to the Y axis will pan the sound from channel 1 to 2. The rate of the pan is determined by the attack time. Example B applies the same attack to both channels. In this case the sound is moved from front to back at the same rate it moves from left to right, producing a diagonal pan from channels 1 to 3. It must be explained that with this pattern the sound actually moves through channels 2 and 4 at the same time. Otherwise there would be no way to have the signal appear to pass effectively through the center of the field. Example C is still accomplished with one EG. In this case one leg of the control is inverted before being patched to the Y axis. This produces a diagonal pan from channels 2 to 4. If the Y axis had a static 5 volts the sound would be positioned midway between the front and rear channels. A rising and falling envelope applied to the X axis would then pan the sound from left to right back to left in the middle of the field (example D). The 360° circular pan in example E requires two EGs to be continually 90° out-of-phase with each other. This can be accomplished by setting the correct attack and delay times and using a delayed pulse to fire the Y envelope. Another possibility is to use quadrature related EGs to produce the required functions (see chapter 6, page 69).

Figure 13.17A through D illustrates four different panning patterns which can be generated from one set of controls from an integrated sequencer. Bank A of the sequencer will control the X axis and bank B will control the Y axis. The speed of the pan is controlled by the sequencer clock rate. If the voltages are to be integrated, make sure that the time constant is no longer than the clock period. If you have a voltage controlled integrator you might consider inversely controlling the clock rate and time constant from the same source. With this configuration a high control voltage would produce a fast clock speed and a fast integration rate. As the control voltage is lowered the clock would slow down but the integration time would increase, maintaining an even pan.

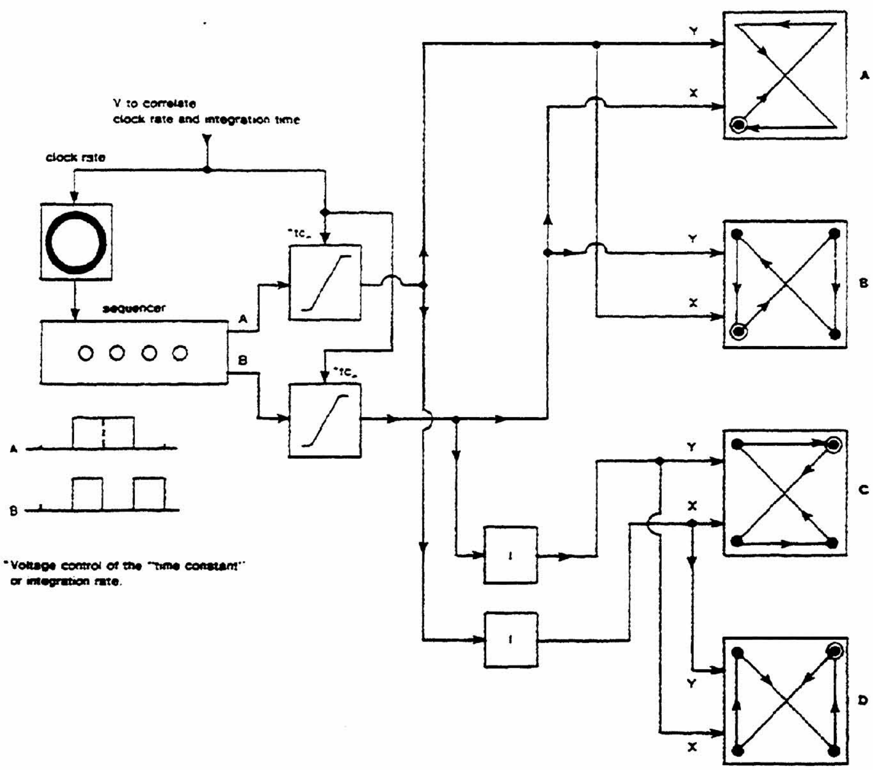

Figure 13.17. Panning control correlation in four source quad panning

An analysis of the patch in figure 13.17 is not as complicated as it might appear. A four increment sequencer is used to generate the X/Y controls for four different quad panners. It will be assumed that each panner has a different sound patched to its input. The clock rate and integration time are voltage controlled from the same source for the reasons explained above. If integraters are not available, just eliminate them for the present (although the voltages are illustrated as being integrated). The voltage values for bank A (X axis) are 0, 10, 0, 10, producing the function illustrated for A-X on the voltage graph. The voltage values for bank B (Y axis) are illustrated as A-Y on the graph. This particular combination of voltages will produce the "figure-eight" pattern illustrated in the panning chart A. Panning chart B uses the same voltages, but they have been reversed. What was the X axis control is now the Y axis control, and visa-versa (see the voltage graph for B). The panning pattern produced by the interchange of voltages is still a figure-eight, but a slightly different direction. Panning outputs C and D use inverted forms of the same sequencer functions. Note that with this inversion C is a mirror of A and D is a mirror of B. The Serge QMX has built-in inverting inputs, therefore external inverting modules are not needed.

The point of this patch is to illustrate how several patterns can be generated from one set of controls and to hint at some degree of "thematic" unity between the sound motion. One could fill several pages with other types of processing such as attenuation, sampling, or quantization. In my opinion it is much more exciting to discover these things for yourself.

Simulation of Other Location Cues

The techniques discussed up to this point have only been concerned with moving sound on a single plane laterally in front of or around the perceiver. A sound which appears to be approaching from a distance involves a more complex technique. The controls of local and global reverberation and Doppler shift are not as really complex as they are expensive or inaccessable. We have the technology to produce a true sound location module. The amplitude control techniques dealt with so far could be combined with digital reverb and Doppler in a single module to provide very precise cues for virtually any manner of sound movement. At the present time we are waiting patiently for digital costs to come down enough in price so that some clever designer will make such a black box for a popular price. For the time being a voltage controlled reverb can be used for the reverberant sound cues, and a digital delay or frequency shifter can be used to simulate the Doppler shift. These are rather complex equations for calculation of precise reverb and Doppler information. At this point analog control does not justify use of such subtle specifications and it can usually be done faster by ear.

At the beginning of this chapter it was explained that reverberation and Doppler shifts are the prime

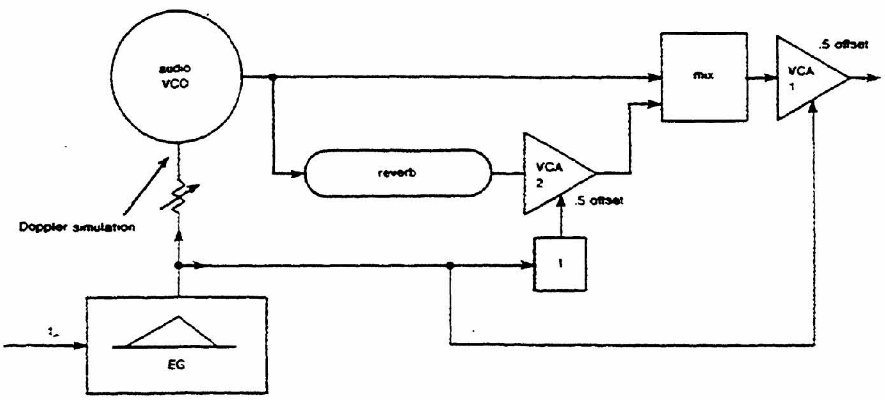

Figure 13.18. Global planning with reverb cues and doppler simulation

cues for radial location. The farther a sound is from a perceiver, the more reverberation it will display. As the sound moves closer, the local reverberation becomes less as the intensity grows. At the same time, depending on the speed of approach, there will be a slight rise in pitch due to the Doppler effect. Figure 13.19 illustrates one possible configuration for controlling the radial effects of sound. Since the amount of reverberation is inverse to the gain, the relation of the control voltage to the reverberation unit must be inverted. The control signal for the Doppler simulation must also be greatly attenuated, since the amount of voltage used to control the VCA could result in more of a frequency change than is needed to simulate the Doppler effect. If the reverberation unit is not voltage-controllable the audio signal is split and one leg is subjected to reverberation. Before the signals are mixed back together, the gain of the reverberated signal is inversely controlled by the same control voltage used to determine the final gain. If the mixer were voltage-controllable, the first VCA could be eliminated. A second reverberation unit could be added after the mix to simulate global reverberation. Another processing device which could be used is the high-pass filter. As the sound moves closer to the perceiver, the lower frequencies become more and more pronounced. As with the Doppler simulation, the control signal would have to be considerably attenuated, since this shift in frequency response is very slight.

By using the techniques set forth in this chapter in various combinations, it is possible to place and pan sound in an unlimited number of patterns. The composer should experiment with all types of control envelopes and different patterns of speaker placement. Extreme care must be taken to be sure that speakers are properly phased. Since the panning effects are dependent on relative amplitude levels of a monophone signal, improper phasing could result in very critical cancellation. The more speakers and channels used, the more precise the panning will be, and in a real-time performance situation one is only limited by the availability of the equipment. If the music is to be subjected to tape storage, however, the number of available channels is the limiting factor. The composer, in most cases, will find that four channels are usually sufficient for most panning requirements, since several different panning formats may be stored on a single tape at one time. One tape may contain information which moves in a figure-eight pattern, another information moving in a 360° clockwise pattern, and a third information moving in radial patterns. All three tapes may then be dubbed-down to a single tape without affecting any of the panning patterns. The only limitation to the number of panning configurations that can be produced simultaneously is their composite effectiveness. Too many simultaneous patterns will not be perceived individually as pans, but rather the acoustical space will be perceived as being in an undefinable state of flux. Of course, if this is the composer's intent, it may be used to create some beautiful effects. If you have a number of panning patterns going at one time, try to keep each voice in a different register or within the same critical bandwidth (see page 146). Another precaution is just too much "business" in the panning. Dynamic location takes place in time and brings with it certain rhythmic implications. If the durational level of the rhythm is at one tempo and the panning "rhythm" is at a completely non-related level, the total effect in some cases can be distracting—unless you handle it well. The idea of "rhythmic dissonance" can be well illustrated by setting up a rhythmic ostinato with a VCO, VCA and the appropriate controls. Now pan the ostinato at a slightly different rhythm. Next, devise a way to lock the panning rate to the durational rate of the ostsinato and compare the different effect. Using alternate timing pulses or electronic switches try correlating panning motion at ½ or ¼ the speed of the rhythm.

Only recently have we begun to realize the potential of the spatial aspects of composition. Just as the use of dynamics has been an evolutionary process of a parameter realized in the seventeenth century, the technology of the twentieth century has revitalized an aspect of sound which will continue to develop with the composers' and performers' methods of control.

14 Miscellaneous Equipment

The majority of the modules and equipment discussed in this book have been classified and dealt with in terms of function. At the same time, most of these devices were either incorporated as a module of a total electronic music system or were an integral part of the recording/playback chain. Even though oscillators, specialized modulators, filters, etc., are now being manufactured specifically for use by the composer and performer in the electronic medium, they were originally intended for use as communications and electronic test equipment. As composers became more and more familiar with the technology, they found they were able to make use of this equipment as a unique method of processing sound. The technological age of the composer is just beginning, and as the field of communications and electronics continues to grow, the composer will continue to find uses for newly developed equipment. The purpose of this chapter is to familiarize the reader with some of the more common equipment found in an electronic music studio which is normally not part of present commercial systems.

Transducers

One of the major processes of electronic music is that of "transduction," the transfer of power from one medium to another. A transducer is a device which reacts to one type of wave (voltage, light, pressure, current, etc.) by transforming that wave into an analogous wave of another medium. Tranduction may take place between any two mediums, such as light to voltage, voltage to frequenecy, pressure to frequency, voltage to pressure, etc. The ideal transducer is one that transfers the maximum possible power from one medium to another. Unfortunately, the ideal transducer is a hypothetical device; there is always a minute percentage of non-linearity or power loss.

Microphones

The most commonly known transducer is the microphone. In terms of function, the microphone is an electro-acoustic transducer which reacts to pressure waves and produces analogous electrical impulses. The accuracy of this conversion is measured by the microphone's sensitivity and frequency response. The sensitivity of a microphone is a technical specification indicating how much of the acoustical energy arriving at a microphone's input can be converted to usable electrical impulses. The frequency response refers to the range of frequencies to which the microphone is sensitive, and the deviation in sensitivity throughout that range. The ideal microphone will exhibit a flat response, meaning no deviation, over the entire audio spectrum. But this ideal transducer is of course hypothetical; microphones exhibit various combinations of frequency ranges and areas of varying sensitivity within those ranges. To say a microphone has a frequency response of from 100 Hz to 10k Hz means only that it best responds to frequencies between those extremes. The response at 100 Hz may be "X," the response at 600 Hz may be "2X," and the response at 5k may be "1/2X." For most purposes the flatness of a microphone's response is more important than its frequency range. If the microphone is used as a transducer for flutes and violins, a smooth response at the higher end of the spectrum is more important than an extended lower range. Conversely, a microphone used for the lower instruments requires a smoother low-frequency response.

Since the quality of an amplified signal can be a very subjective matter, the composer should become familiar with the characteristics of all of the microphones in the studio. It will be found that similar microphones, even those of the same specifications manufactured by the same manufacturer, may actually exexhibit quite different characteristics. The composer must also remember that when used in a composing or performing situation, the microphone is the first device to come in contact with the sound and that it will define the quality of the rest of the system.

The least expensive type of air microphone is the *carbon mike*. (The input transducer on the normal home telephone is essentially a carbon mike.) Its operation is a result of varying sound pressures causing variations in resistance between encapsulated carbon granules. The carbon mike has a very limited frequency response, usually about 80 Hz to 7.5k Hz. Of course, if a carbon mike with the desired frequency range is available, it may be used as a processing filter. *Do It* by composer Robert Erickson specifies the use of a carbon mike precisely because of the desired effect of limited frequency response.

The *crystal microphone* operates on a basis of mechanical strain. Sound pressure waves move the microphone diaphragm, which in turn places a mechanical strain on a piezoelectric crystal such as quartz or Rochelle salt. In reaction, the crystal produces electrical charges. Crystal microphones are also quite limited in their frequency response. (Contact microphones, which transduce pressure waves transmitted through solid mediums, also operate with piezoelectric elements. The piezoelectric element is connected directly to the output leads and is usually sealed in a rather fragile casing. The composer or performer will find that contact mikes have a longer life if the case is opened and reinforced with epoxy cement. This will make the unit more stable and will prevent the output wires from breaking contact with the crystal.)

Operating on a principle similar to the crystal microphone, the *ceramic microphone* exhibits a wider and smoother response than either the crystal or carbon mike. The disadvantage of a ceramic mike is its high impedance. High-impedance transducers are hard to work with because they are so susceptible to noise and hum. This is especially critical when using cables longer than 15 or 20 feet. Special transformers are available to convert high-impedance lines to balanced low-impedance lines and are well worth their moderate cost.

Dynamic microphones use a small coil which is moved by the pressure of sound waves on a diaphragm. The coil moves back and forth in the field of a permanent magnet which, in turn, generates a current in the coil. The ribbon microphone operates by means of an aluminum alloy foil ribbon suspended in a magnetic field; the ribbon's movement results in an induced AC current. Both the dynamic and ribbon microphones are in the medium price range and are adequate when working with somewhat limited ranges and with the human voice. The ribbon microphone contains a powerful horseshoe magnet and is therefore relatively heavy. For this reason, plus the fact that ribbon mikes are very sensitive to wind and over-accented fricatives, the dynamic microphone is often preferred.

The professionally preferred microphone is the *condenser* or *electrostatic microphone*. This type of mike generates signals as a result of variations in capacitance between two charged plates, one of which is the diaphragm. The frequency response of these mikes is excellent, and if a professional sound is desired they are essential equipment for the electronic music studio. The only provision one must consider is that condenser mikes require special power supplies built into or immediately external to the casing to convert the signal to a level suitable for line transmission. Condenser microphones are also more expensive, but if one considers that the effectiveness of the transducers defines the effectiveness of the whole system, they are well worth their cost.

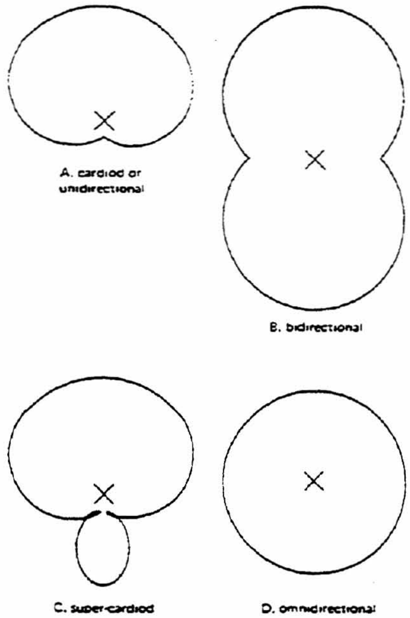

Figure 14.1. Microphone field patterns

When working with any microphone one should be aware of its particular field pattern. Often referred to as the directional characteristic or polar pattern, the field pattern defines the area or direction to which the microphone is most sensitive. A cardiod or unidirectional microphone is more sensitive on one side than on the other, as illustrated in figure 14.1. The null on the back side of the mike should not be taken as absolute, since it will be frequency-sensitive to a certain degree. This is especially true of low frequencies. The bidirectional microphone exhibits maximum pick-up in two opposing directions, with the null at a 90° plane between the two lobes (14.1B). With bidirectional mikes, the distance from the sound source will play a large role in the character of the sound. This is especially noticeable with very close miking. At distances less than about two feet, the bass frequencies are very strongly emphasized. Consequently, the sound source should not move within the field and the use of equalization circuits can be very advantageous. Ribbon mikes, which are bidirectional microphones, are very senstive to fricatives, therefore it is advisable to use wind shields and speak across the mike's face.

The rifle, gun, or super-directional microphone is a dynamic mike which incorporates a battery of tubes of various lengths. This type of mike is intensely directional except to frequencies exhibiting wavelengths much longer than the length of the tube. A field pattern falling between the bidirectional and cardiod pattern is the supercardiod, as illustrated in figure 14.1C.

The omnidirectional or nondirectional microphone (figure 14.1D) ideally is sensitive to all frequencies coming from all directions, but in practical use omnidirectionality is only true for frequencies below 5k Hz.

It is impossible to make any truly objective statements concerning actual microphone placement for the composer or performer. In commercial recording situations there are certain fidelity standards which guide the placement of microphones, and in those situations there are definite procedures for microphone location. But the composer is often concerned with using the microphone as a modification device as well as a pressure-to-signal transducer, and hi-fi guidelines do not apply in all cases. There are several points that the composed should keep in mind, however, which may save considerable time in experimentation:

1. Use low-impedance mikes. They are less susceptible to noise and permit the use of longer cables.
2. Consider the signal/noise ratio of the total environment as well as the different locations within the environment.
3. Remember that higher frequencies are more directional than lower frequencies.
4. Consider the inverse-square law: When the sound source's distance from the mike is multiplied by X, the intensity is divided by X^2.
5. When using multiple microphone systems, make sure they are in phase. This may involve turning bidirectional mikes 180° to match the phase of the unidirectional mikes.
6. Close miking cuts down transduction of the room reverberation.
7. Securely tape down all microphone cables. Run the cables away from areas of audience interference.
8. Experiment!

Mike choice and placement is a matter of individual preference and will usually involve a lot of experimentation, even for the professional. Two books referenced earlier, Robert Runstein's *Modern Recording Techniques*, and John Woram's *The Recording Studio Handbook* provide excellent information on such matters. The current definative reference on microphones is Lou Burroughs' *Microphones: Design and Application*[1] and is recommended to anyone having access to professional recording equipment.

Patchchords and Patching

The basic law of electronic music, as stated in the epigraph to this book, is even more applicable to jacks and plugs than it is to the length of patchcords. Unless a composer is limiting himself to working with the modules found on one particular system, he will inevitably be in constant need of adaptors to allow him to make a patch from a particular device with one connection format to another device with a different connection format. The simple task of patching the system output to a tape recorder or an amplifier may call for special adaptors. Even commercially-manufactured electronic music systems cannot decide on a standard connection format and, in addition to the necessity of voltage interfaces, their compatibility depends on the availability of adaptors. This lack of standardization among the audio equipment manufacturers in the United States forces the composer working with a variety of equipment to spend much of his studio time searching for patchcords and adaptors. The composer must also consider that each time an adaptor is added to a signal path it contributes a certain amount of insertion loss and noise.

The most common types of connectors are illustrated in figure 14.2. The RCA, phono, or pin plug is the type most commonly found on home stereo/hi-fi equipment (fig. 14.2A). Although it is one of the more common plugs, some manufacturers avoid using it because the outer ground terminal has a tendency to expand with continued use and must occasionally be re-shaped to make a tight fit. The phone plug (figure 14.2B/C) is available in either a two- or three-connector format. The guitarist is familiar with this type of plug since it is commonly used with commercial guitar amplifiers. Various low-impedance microphones also use the two-connection or tip-sleeve format. A microphone requiring a balanced line may use a phone plug with the ring-tip-sleeve format. This type of connector may also be used for transmitting stereo signals with a single patchcord by sharing the same ground. Many people prefer the use of phone plugs because of their sturdiness. By the same token, many people avoid their use in smaller studio situations because they require thicker cable and are bulkier to handle. The XLR or cannon plug (figure 14.2D) is a three-terminal connector usually used with balanced-line transmission such as with balanced-line microphones. The XLR or cannon plug is preferred over the ring-tip-sleeve phone plug because of its special locklatch which insures a tight connection and cannot be accidentally pulled out. The mini-phone (figure 14.2E), as its name implies, is a midget version of the two-connection phone plug. The miniphone format is used by some manufacturers because of the fact that they take up very little room on a patching panel. These plugs are less sturdy than some of the others and must be handled with more care. The banana plug (figure 14.2F) has a single-terminal format and is usually used for the patching of DC and trigger voltages. Like the phono plug, the banana may begin to lose its shape after prolonged use and will occasionally have to be reshaped to make a tight connection. The cinch

1. Published by Sagamore Publishing Co., 1120 Old Country R., Plainview, N.Y., 11803.

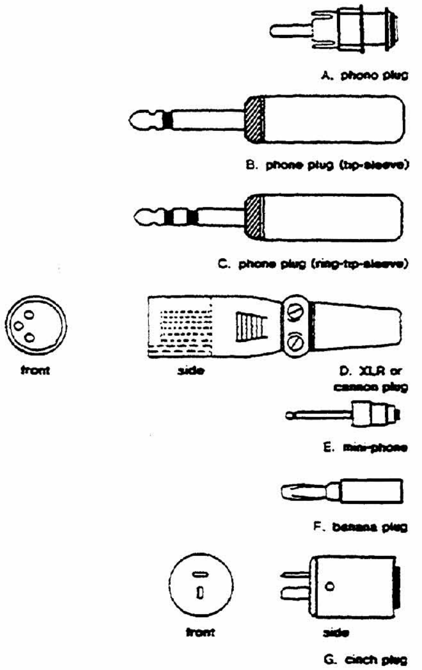

Figure 14.2. Common connectors

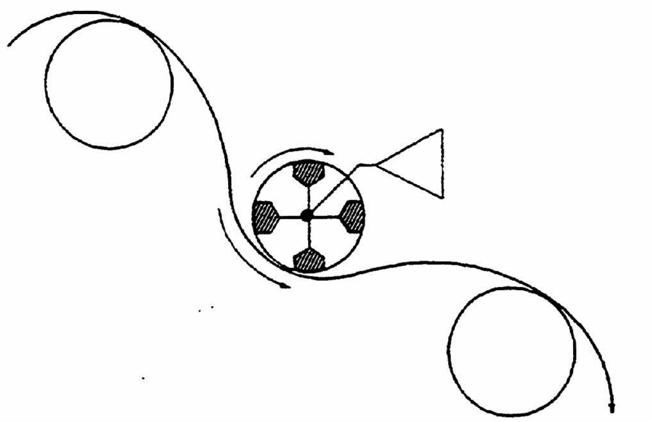

Figure 14.3. Head cylinder for an information changer

plug (fig. 14.2G) is a connector which is not so frequently encountered, but it is used on the modular Moog instrument for transmission of "S-triggers."

Some manufacturers of electronic music systems are attempting to solve the patchcord problem by using internal patching manipulated by switches or through matrix boards. Internal patching with switches for routing signals to the various modules does solve the patchcord problem, but this also presents a few problems of its own. If the designer is not extremely careful to allow for every conceivable patching configuration, he may limit the composer in his approach to that particular system. At the same time, a switching function often does not provide the number of multiple inputs and outputs required by many configurations. While many composers pay very little attention to how a particular module is intended to be used, such a lack of knowledge is often the source of their creative approach. Consequently, the designer is usually at a loss in trying to anticipate composers' needs.

Certain micro-processor based instruments provide for computer controlled patching. A complete patch can be stored and called up as needed. Such instrumentation will also usually store module offset and control voltage and audio attenuation levels so complete instrument configurations may be called up from a touch of a button (such as a keyboard, an externally generated timing pulse or a sequencer).

Information Changers

The Zeitdehner

The often overused technique of varying the playback speed of prerecorded sound is given new possibilities with the "zeitdehner" (time-stretcher), also referred to as information rate changer or pitch and tempo regulator. This device is the analog precurser to techniques now available through digital delays (see chapter 13, page 200). The zeitdehner is a special playback arrangement which allows for speed variations without affecting the frequency of the recorded material. Conversely, the frequency of the recorded material may be changed without changing the playback speed. This is accomplished by means of several playback heads mounted on a rotating cylinder. The individual heads are arranged so that only one head at a time comes in contact with the tape. Heads are so spaced that at the exact moment one head leaves the tape surface another head has rotated around to take its place. If the cylinder is rotating in the same direction that the tape is moving, the monitored signal will be at a lower frequency than the recorded signal. If the heads are moving in a direction opposite to the tape motion, the effect will be a rise in the monitored pitch. This frequency change is due to the Doppler effect described in chapter 13 and has no effect on the rate of information. If the speed of the tape is varied in certain relationships to the rotation of the head cylinder, however, the rate of information can be changed without affecting the frequency. Both frequency and rate can be continuously varied from half the original format to almost double. Besides being very useful for adjusting fine tuning and for sync purposes, the zeitdehner can also be very effective in producing timbre modifications. Since it is possible by its use to prolong various transient states without changing the frequency, the zeitdehner is able to capture sounds that would otherwise be impossible to obtain. Due to the physical arrangement of the cylindrical mounting, there is a certain amount of distortion as the heads rotate in and out of position on the tape, but the amount of distortion is quite low and can usually be masked if that particular sequence appears with other tracks of sound.

The Vocoder

The zeitdehner and digital instruments can be used for pitch and rate change, while the "Vocoder" is primarily a spectal transfer device. Any sound (human speech, instrumental or electronic sounds, etc.) patched to the "voice" or "speech" input has its transient harmonic information transferred to any signal appearing at the "carrier" or "excitation" input. The carrier may be any properly pre-amplified signal or may consist of internal audio oscillators as in the EMS Vocoder.

The vocoding process can be illustrated by imagining the transfer of a human voice to a sawtooth wave. Earlier chapters have suggested many envelope following techniques. The overall amplitude characteristics of the voice are detected and used to control a VCA which is determining the gain of an oscillator. In this case the timbral content of the voice is disregarded, except in terms of how it contributes to the overall amplitude. The word "hey!" is presented only as a generalized envelope. The spectral information of the word, the evolution of the sound "hay-ee(uh)" has no effect on the spectral information of the oscillator.

The vocoder must be able to determine the energy content of various parts of the spectrum and transfer that energy to various parts of another spectrum. The *analysis section* of the vocoder "decodes" the spectral information of the voice signal in the following manner. The voice input signal is taken to a number of analyzing filters.[2] The spectrum of the excitation signal is then split into a proportional number of frequency bands by this filter bank. The varying amount of energy or amplitude of each pass band can then be extracted by an envelope follower. At this point the instrument has a different control voltage for each detected portion of the "voiced" spectrum. As the various spectral bands evolve in relative amplitude the detected controls likewise vary.

The excitation signal is patched to a similar set of filters in the *synthesis section* of the instrument. These filters exhibit the same pass-band characteristics as the analyzing section. Each pass-band is then patched to a separate VCA and the outputs are remixed to form a composite output. If a single control were applied in parallel to each VCA, the vocoder would serve as nothing more than a redundantly designed amplitude transfer circuit. The configuration in figure 14.4, however, illustrates the basic vocoder patch. The control voltage representing each spectral band of the voiced signal is used to control the gain of the respective band of the excitation signal. The energy of the spectral bands of the excitation is directly controlled by the corresponding voice bands.

This basic vocoder patch assumes the voice and excitation signal have a certain amount of spectral information in common. For example, consider a situation

2. The EMS-Vocoder uses 22 filters and the Bode 7702 Vocoder uses 16.

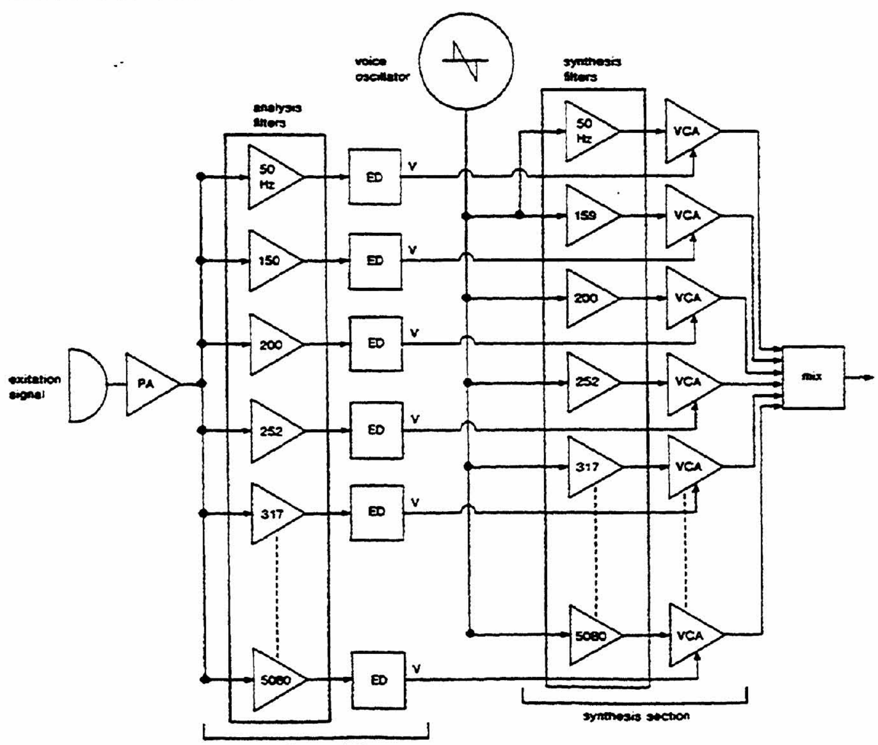

Figure 14.4. Basic vocoder diagram

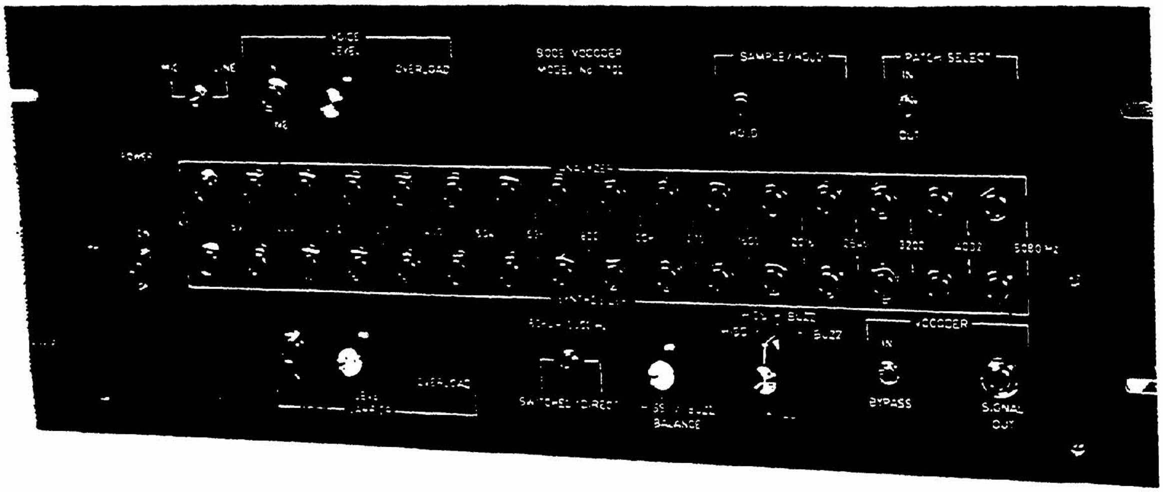

Figure 14.5. Bode 7702 Vocoder (Courtesy Harald Bode. Bode Sound Co. Used by permission.)

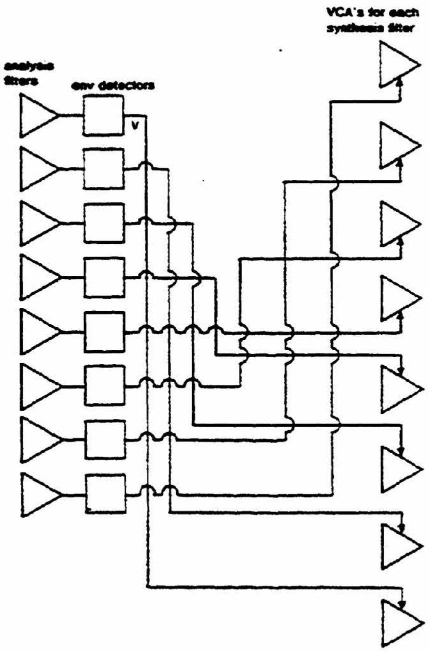

Figure 14.6. Spectral "inversion" with a vocoder

in which the voice was a saxophone and the excitation signal was a sinewave! The rich sax spectrum would be decoded into a number of control voltages which would be redundant in trying to control the non-existent spectrum of the sinewave. A sax imposed on a square wave or the sound of a pounding surf would be a much more rewarding situation.

More creative games can be played with the instument by repatching the spectral controls. As with the Bode 7702 illustrated in figure 14.5, most vocoders provide some patching format for coupling the analysis section to the synthesis section. An obvious example would be to invert the respective sections as suggested in figure 14.6. With this patch the low spectral content of the voice input would determine the energy of the excitation signal. Other patching could be used for other spectral transfers. One might even experiment with processing portions of the analyzer output (reverb, AM, delay) before the signals are patched to the synthesizer input.

Vocoders are also equipped with "hiss" and/or "buzz" circuits, which are noise genertors used to replicate the fricatives in human speech. A sample/hold or "freeze" enables the musician to sustain a given voice spectrum. The circuit samples the transient-control voltages and holds them in a steady state condition while being applied to the synthesizer VCAs. The EMS-Vocoder has an internal pitch-to-voltage converter so the instrument is also able to transfer pitch information to the internal excitation VCOs or to any other voltage-controllable parameter.

Dynamic Processors

Compressors, limiters and expanders are specialized VCA circuits providing control over the dynamic range of a signal. If a particular sequence has a hypothetical dynamic range of from 60 to 70 db, it will require a fairly high gain level to make that amount of variation in gain available. If a system begins to introduce noise at that high a gain setting, then a *compressor* may be used to compress the 60-70 db range to a more workable range of perhaps 40-45 db. Compression differs from overall manual gain reduction in that while gain reduction results in equal amounts of suppression to the total envelope, compression is a result of applying most of the gain reduction to the higher amplitude peaks (figure 14.7C). A *limiter* is a type of processing device which only affects the peaks of a particular signal. Up to a specific level the output signal is linear with the input signal. The instant the input signal reaches a preset amplitude threshold, it is maintained at that level and not allowed to go any

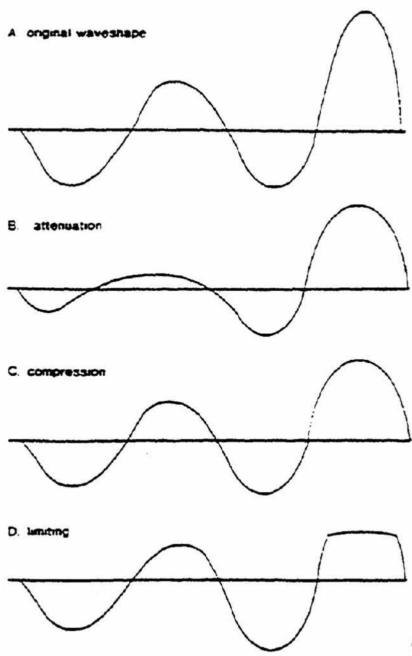

Figure 14.7.
Compression and limiting

higher. Limiting differs from compression in that it only reduces amplitude peaks; signals below the predetermined level are not affected (figure 14.7D). A compressor/limiter applies the combined functions in several different manners. The usual application is to apply compression to the lower portion of the dynamic range and use the limiting function as a safeguard against sudden amplitude surges which may exceed the top level for which the compressor is set to function. Along with the function of noise reduction, the compressor and limiter are used in AM broadcasting and other situations where excessive gain levels could result in overmodulation of the signal. In cases where only one step of signal processing requires a compressed or limited signal, the original gain level may be retrieved with the use of an expander. The *expander* provides a complementary function to the compressor, since it provides automatic gain increases to a proportionally lower level signal. A combination compressor/expander unit is referred to as a "compander" and is usually used to improve the signal-to-noise ratio in communications and reproduction systems. By understanding that these instruments are basically VCA circuits the user is encouraged to experiment with different control configurations. Various attack and decay times or substituting different control signals can replicate many of the effects explained in chapter 6.

Noise Reduction

One of the most serious problems facing the electronic music composer is the control of noise in the record and playback systems. Every system has a dynamic range which is defined by the residual noise of the system being the low-level limit and the power handling capacity determining the high-level limit. A noisy system is defined as having a noise level that is insufficiently below the highest signal level, to the degree that it interferes with the intelligibility of the lowest levels of the information signal. The most effective way to deal with noise is to keep the systems in top-quality condition and to exercise great care during the recording process. Due to the unavoidable inherent noise level in some systems, however, several other methods have been devised to deal with this problem.

The two most current and popular noise reduction devices are Dolby and DBX. The Dolby Type A is a specialized design of a compander unit which provides a very effective type of noise reduction. The unit divides the input signal into four separate spectrum of frequencies below 80 Hz, 80 to 3k Hz, 3k Hz and above, and 9k Hz and above. Frequency components above a certain amplitude level are passed straight through the system without any further processing. Signals existing below a specific level are boosted by 10 to 15 db, depending on their frequency. The composite recorded signal then contains no low-level components except for the noise introduced by the recording process. During playback the boosed signals are compressed back to their original low level and the same amount of compression is applied to the noise contributed by the recording process. The overall result is a very specialized form of equalization which reduces noise by 10 to 15 db. Print-through, cross-talk, and hum are also subjected to about 10 db suppression. Of course any signal processed through a Dolby System must be reproduced through a Dolby System, and any further re-dubbing may replace the negative recording effects which were originally suppressed. It is possible to make dubs of the Dolbyized master on regular recording machines and then reproduce the dub through the Dolby System. In building up several generations of tapes, the individual source tapes should not be processed by the Dolby. The final composite dub-down is the generation to be processed, or there is a danger of producing varying noise levels. Also, if other treatment—such as modulation, filtering, etc.—are to be done, these processes should not be manipulated while the signal is in the Dolbyized state. Attempts to alter the processed signal can result in low-level amplitude modulation and distortion to the reproduced signal. It is perfectly safe, however, to edit the processed tape without danger of distorting the processed signal. Although the Dolby System is used primarily as a noise reduction system, the processed tapes are often used as a means for detecting low-level distortion and noise. The composer might also consider the possibility of using the processed signal reproduced on a normal deck as a final modification means in itself.

The Dolby B unit is a simplified version of the Dolby A. Dolby B is standard equipment on most new cassette decks and it is also available as an auxiliary device with several quadraphonic tape recorders. For moderate cost studios with quad recording I have found Dolby B to be well worth the investment. (For a more detailed description of the function and operation of the Dolby System see R. M. Dolby, "An Audio Noise Reduction System," *Journal of the Acoustical Engineering Society*, Vol. 15, no. 4, Oct., 1967.)

The dbx Noise Reduction System is a compressor/expander combined with high frequency pre/post-emphasis network. The high frequencies are boosted well above the imposed tape noise level so on playback the noise is reduced up to 30 db. This amount of high frequency boost would normally distort the tape, and therefore the compressor/expander circuit is incorporated to prevent this from happening.

There are many such noise reduction systems on the market, and each engineer and/or musician has his own preferences. A summary and criticism of Dolby, dbx and other systems is given in Woram's *The Recording Studio Handbook* (pages 331-338).

Stereo Synthesizers

The true stereophonic effect is due to many different factors, including amplitude and phase; and the directional stereo array is created by reproducing the exact intensity and phase characteristics as they were in the real acoustical environment. Taking advantage of the phase phenomenon, commercial systems are now available which can create a pseudo-stereophonic field from a monophonic recording. This is usually accomplished by phase-shifting various components of the composite signal on different tracks so that one signal reaches the listeners' ears before the other. While they are actually much more complicated than the last statement would imply, pseudo-stereo systems or "stereo-synthesizers" work very well in creating stereophonic arrays. (A detailed explanation of one approach to pseudo-stereo is Robert Orban, *"A Rational Technique for Synthesizing Pseudo-Stereo from Monophonic Sources," Journal of the Audio Engineering Society*, vol. 18, no. 2, April, 1970.) In addition to the obvious application of creating stereo images from monophonic sources, these systems can also provide other functions. Since the effects of directionality are largely cued by phase differences, a monophonic mix of the pseudo-stereo channels will not result in the "center build-up" caused by other dub-downs of stereo channels. Another application is the use of only a single output from the system. Since the spread and location of the images in the stereo field are a result of phase variation, the use of one output channel can result in various phasing effects. Units are also available which provide for the voltage control of the stereo image which is very similar to voltage-controlled panning. In this case the actual controlled parameter is the phase.

Stereophonic playback systems require that special care be given to speaker phasing and location. The ambience, or characteristic acoustics, of the environment will aslo have a great influence on the directionality of the individual signals and the separation between the channels. The composer will also find that minute intensity changes are more noticeable in a stereophonic field than with biaural reproduction.

Tape Looping

Although a now classic technique associated with musique concrete, the continuous tape loop still holds its own among the more automated methods of voltage control.

The most important consideration in working with tape loops is the splice. When subjected to several repetitions, a noisy splice becomes even more noticeable and can ruin whatever function the loop is to serve. If the event on the tape is made up of several attacks and decays, the ideal spot to make the cut is at the very beginning of an attack. As explained in chapter 10, attack transients can be used to mask any noise caused by the splice. If the loop consists of a single continuous event with no attack or decay, very special care will have to be taken with the splice, but if the tips given in chapter 10 are followed, an effective splice is possible.

The second consideration when using loops is the tape tension. If a tape is not kept flush against the playback head at a constant tension, there will be constant fluctuations in the output gain, and speed variations caused by the changes in tension. If the tape decks use only pressure pads and a capstan drive, there is usually no problem and the size of the loop is of no consequnce; the interaction between the pressure pads and the capstan keep the tape flush against the head at a constant tension. A tape deck with tension arms, however, is designed to work in conjunction with the torque supplied by the feed and take-up reels. Unless the tape loop is the exact size to supply the necessary torque, the tension will not be regulated and the playback will be very erratic. One solution to this problem is a variable-length tape guide, as illustrated in figure 14.8. The guide is adjusted to the exact size of the loop so that the tape is under constant tension at all times.

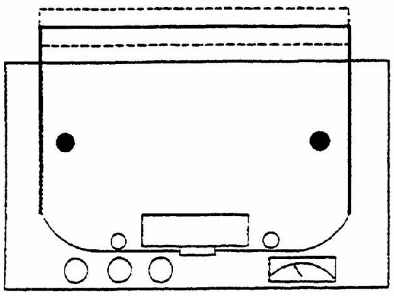

Figure 14.8. Variable-length loop guide

An approach to providing tape tension which allows more applications is a loop board. Illustrated in figure 14.9, the loop board is an aluminum plate with provisions for placing tape guides or additional playback heads at almost any point on its surface. If the board is to be used only to provide tension for a tape loop, then the placement of two or three tape guides forming a triangle will suffice. The composed also has the option of inserting playback heads in the board, making it possible to monitor the tape at multiple points along its path, these to be mixed with the other playback points or taken to an individual channel. One advantage of the board is that the tape is not necessarily spliced end to end in a loop. Reel-to-reel formats are applicable to loop boards.

Some studios oriented to the more classical methods of electronic music production have a bank of several playback decks especially intended for use with loops. These machines differ from the normal tape deck in several ways. They are usually full-track formats, since most loop material is monophonic. Since their only function is to reproduce recorded material, they only contain a single playback head. The playback circuits are usually external to the actual deck chassis and it is a very simple matter to have variable-speed playback provisions. This is especially useful when the loops are to be used for precise rhythmic effects, since they can be finely adjusted to exact playback tempi.

Another feature often found on a loop deck is a provision for reversing the motors in order to play the tapes backward without turning them over. This is also possible on capstan drive machines which have three separate motors for forward play and record, rewind, and fast forward. Threading the tape on the back side of the capstan roller will feed it backwards past the playback head. In order to keep the tape in constant contact with the head, it is sometimes necessary to bypass the left-hand tension arm and thread the tape directly to the left-hand reel. This is rather a make-shift technique and most machines are not intended for it. It should only be used when there is

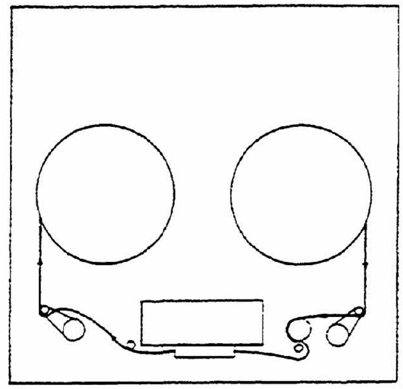

Figure 14.9. Tape path for reversing tape play direction

no chance of damage to the machine and time does not permit reversing the tape, such as in a live performance situation. With a bank of loop machines, each head should have its own separate preamplifier with all of the output jacks located at a single patch panel. This panel would be even more practical if it also contained at least two mixers for combining the loop outputs into various channels (fig. 14.9).

By using tape delay and loop boards, an effect of time distortion can be produced. The recorded sound is monitored at various points on a loop board and is also monitored at the same moment that one or more of the heads is picking up sound at another place on the loop. Each of the playback heads is usually equipped with some manner of gain control (in the individual pre-amps) which permits the composer to mix the various playback points as he wishes. By subjecting each playback head to individual gating, an effect of "temporal shifting" can be produced.* As an example, suppose that the sentence, "Yes, I bet you can," is recorded and the tape is made into a loop and placed on a board with five different playback heads, each with its own pulse-controlled gate (figure 14.10). If gate 1 is pulsed at various intervals, the monitored output would be the elimination of various words in the sentence, depending on the length of the loop, the temporal spacing of the words on the loop, and the pulse speed and length. In much the same manner as the pulsed-mixing technique, if gate 5 is opened when gate 1 is closed, the alternation of the outputs of the two heads may be something like, "Yes you you I I can can," etc. An alternation between heads 3 and 5 could produce the following ssequence, "bet you Yes I you can." A gating sequence of heads 2, 1, and 5 may result in "bet I you can bet Yes I can bet," etc. Gating

*Composer Steve Reich makes extensive use of a similar technique in *Come Out* (Odyssey Records No. 32160160) and *It's Gonna Rain* (Columbia Records No. MS7265).

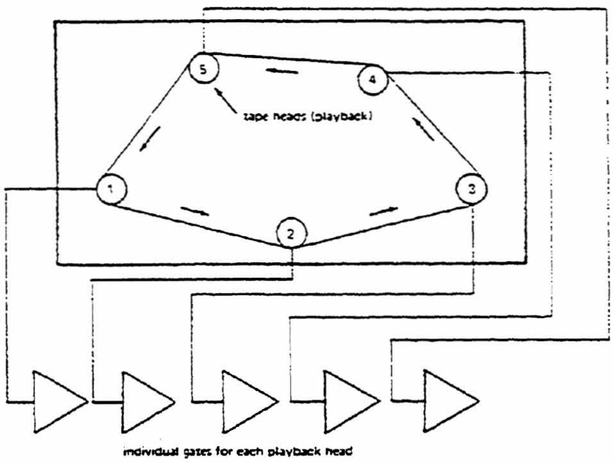

Figure 14.10. Time distortion using a tape loop and pulsed gates

each of the five heads in sequence could produce a sequence of "Yes Yes Yes Yes Yes." The results of this technique are completely dependent on the length of the loop, the spacing of the information on the tape, the number of playback heads, and their location on the board, along with the manner of gating.

Loops may provide ostinato rhythmic patterns or may be used to indefinitely sustain various recorded timbres. In *Rice, Wax and Narrative*, composer Daniel Lentz calls for a large tape loop to enclose two on-stage performers, thus taking advantage of its visual as well as sonic possibilities.

15 Performance Electronics

For many years the audiences of electronic music objected to the lack of visual activity during concerts. Up to the middle of this century musical performance involved the participation of a live performer. Because of this apparent tradition, and partly due to the visual-aural reinforcement involved, contemporary audiences have often expressed dissatisfaction with having to rely on speaker baffles for visual stimulation. It is true that in some cases there may be a definite need for visual reinforcement of sonic events, but in other circumstances the ideal environment for listening to music is on a soft rug in a completely darkened room. If a work is composed purely as an audio event, the composer should carefully examine the aesthetic precepts of his composition before being persuaded to add visual accompaniment. The popularity of intermedia and mixed theatre, however, has made it possible for many composers to expand their creativities to incorporate both sonic and visual activities into a very successful single art form which would not be as effective as it is without the contributions of both disciplines. The light shows and color organs of the discotheques of the late 1960s have now been developed to the state that interfaces are available for producing very complex light patterns using audio and control signals from commercially available electronic music systems. Many composers are also using ordinary oscilloscopic patterns incorporated as visual counterparts to the sound patterns controlling the scopes, and studios are now being designed with interfaces to provide visual patterns for every audio event produced.

Some of the more successful expeditions into the realm of oscilloscopic art have been carried out by composers Lowell Cross and Jerry Hunt since the mid 1960s. Using a television set in a manner similar to an oscilloscope, he creates and manipulates Lissajous figures as a result of his composed audio tracks. Due to the interaction of the audio and video parameters. Cross composes in consideration of both the emotive and visual results of the sounds being produced.

Video artists such as Nam June Paik, Erik Siegel and Steven Beck have designed specialized video synthesizers for exploration of this media. The interest in video art has grown to a point that a certain amount of commercial equipment is now available. Electronic Music Studios (London) Limited, manufactures the *Sprectron* which is a full video synthesized with control formats compatible with their own electronic music instruments. Many of the software packages being developed for micro-processor based electronic instruments contain video synthesis and computer graphics programs.

Audio-visual art, while it does present an audience with visually stimulating events, may or may not involve a live performer. In observing a performing musician, the audience is of course affected by the sonic events being produced, but at the same time it is also influenced by the theatrical consequences of an artist displaying his craft. Although live electronic music was not specifically created to satisfy the demands of this particular tradition, it is certainly a result of that tradition. There is a great amount of existing literature for various ensambles to perform with pre-recorded tape which requires a performer to manipulate the playback deck on cue from a conductor or a score. In this case the electronic processing of the sounds has taken place at a time and place external to the performance. In the true sense of the term, "live" electronic music requires sound manipulation as part of the actual performance. This may call for one or more performers to produce signals via acoustical or electronic instruments and for performers to control the real-time processing of those signals. A live electronic situation may be as simple as the normal methods of amplifying an acoustic instrument or as complex as attempting to patch together a vocoder from separate filters, envelope detectors, and VCAs. Some situations call for purely acoustical sound sources, while other compositions require the addition of electronic sound sources. Still other compostions, such as *Sine Screen* by David Behrman call for the exclusive use of electronically-generated signals in a live performance. In addition to its aesthetic consequences and technical implications, live electronic music has also placed the audio engineer in the role of a performing musician.

As Gordon Mumma points out in his article "Live-Electronic Music,"[1] "The history of electronic music

1. In *The Development and Practice of Electronic Music,* Jon Appleton and Ron Perea, eds., Prentice-Hall, Inc., Englewood Cliffs, N.J. (1975) p. 287.

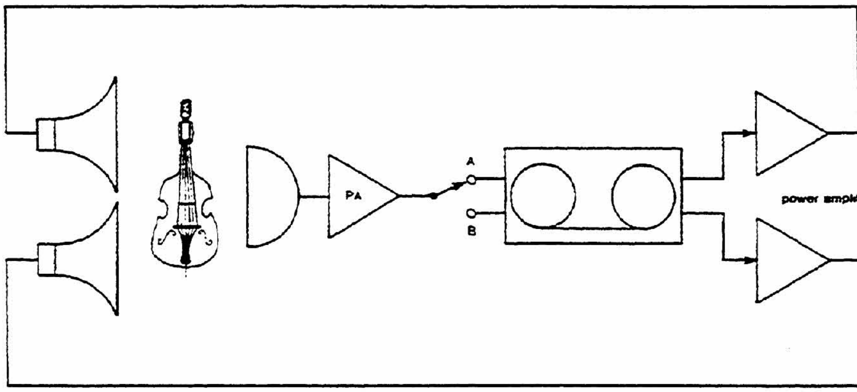

Figure 15.1. Patch diagram for *Bert Bows, Bells and Balls His Bass* by Frank McCarty

begins with live-electronic music." It should also be considered that live-electronic music did not begin with the synthesizer (at least in the commercial sense of the term). Dedicated commercial instruments grew out of a demand from the literature. In light of this fact it is curious to note how many commercial electronic instruments seriously restrict the type of literature they may accommodate. Perhaps a more positive evaluation would be to point out that certain instruments may be geared to a specific musical interest. At this point the question, "what is the best synthesizer" can only be answered in terms of the musicians' personal needs. A night-club show band may find that a $400 pre-patched keyboard instrument is more than adequate for their musical requirements, while other muscians will require a completely open modular system in which a keyboard may be redundant. In other situations a musician may find most commercial instruments unsuited to his needs and prefer to develop home-made circuits for specific musical needs.

The serious student of electronic media, whether a composer performer or historian should dedicate a certain amount of study to the practices of non-synthesizer electronic music performance. The "black-box media" of the late 1950s and 1960s generated a fascinating collection of literature performable with just microphones and sound systems. Specialized processing equipment was "borrowed" from the communication media or constructed by the performer. Two recommended references are the previously mentioned *The Development and Practice of Electronic Music* edited by Appleton and Perera and David Ernst's *The Evolution of Electronic Music.*[2]

A distinctive example of live electronic music literature is *Bert Bows, Bells and Balls His Bass* by Frank McCarty. This composition, written for bassist Bertram Turetzky, together with requiring the bassist to perform very virtuosic passages, a running monologue, and some very comic theatrics, utilizes a tape recorder as an additional performing instrument. This piece is put together as part of the live performance. The completed composition is a mixture of two pre-recorded tracks along with live performance utilizing various degrees of tape echo and feedback. The electronic patching diagram for it is shown in figure 15.1. The bass is transduced by an air microphone, with the gain controlled by a foot-pedal attenuator. The output of the attenuator is dependent on the amount of depression applied to the pedal by the performer. The output is then patched to a switching unit which will allow it to be switched to microphone input A or B of a three-head, two-channel stereophonic tape recorder. Output channels A and B are then taken to a stereophonic amplifier whose output is patched to monitor speakers behind the performer.

A brief description of the performance is as follows: As the performance begins the microphone is patched to channel A of the tape recorder which is running in the record mode with the monitor output gain level set at zero. The performer is involved with a monologue about the history and development of, and contemporary interest in the string bass. At various intervals the performer interrupts his monologue to perform single events on the bass and at the same time raises the output gain of the foot-pedal attenuator so that only those events are recorded on channel A of the tape. After each event the performer must raise the pedal so that no sounds are recorded other than those indicated on the score. This sequence of monologue and isolated events is continued for about five minutes. What now appears recorded on channel A of the tape is a series of single events separated by varying periods of silence. Continuing with the monologue, the performer rewinds the tape, raises the output gain of channel A and switches it to "tape monitor," and switches the microphone to channel B input. Channel B is set in the "record" mode, with the output gain level at zero, and channel A is set in the playback mode. The performer and audience will now hear the first recorded sequence of events from the

2. Published by Schirmer Books, New York, 1977.

channel A monitor speaker while channel B re-records the playback of that sequence along with the live sounds being produced by the performer. At this point the performer must remember to depress the foot pedeal so that the composite signal of the playback and the live performance reaches channel B input. The performer continues his monologue until he hears the playback of the first event recorded on channel A. From this point on, each event monitored from channel A serves as an audio cue to perform an extended event notated in "Part: The Second" of the score.

After this second sequence is recorded, the tape is again rewound and channel B, containing a mixture of the channel A sequence and the previous live sequence, is played back over the monitor speaker for that particular channel. At the same time, channel A is again set to record, with the monitor switch left in the "tape monitor" position, and the output gain is slightly raised. The performer then plays a series of semi-improvised events, along with the two previously recorded sequences, which are also used as cues. At various times during this final sequence, the foot pedal is used to raise the input level to channel A to produce tape echo and acoustical feedback. This is possible because the air microphone will pick up the delayed playback of each performed event, resulting in a sustained repetition (as described in chapter 12). During the performance the performer is also occupied with attaching objects such as bells, string clamps, and ping pong balls to his bow and bass and to his own body. As well as serving to distort both the visual and sonic parameters of the performance, these theatrics also qualify the composition as being for "prepared bass." The overall result is the construction of audio-visual events and situations which, with the aid of a tape recorder, is witnessed from beginning to end as part of the total performance.

The use of electronics in *Bert Bows, Bells and Balls His Bass* seems quite simple when reading the score or observing a performance, but there are many things which had to be considerd in its planning and in the organization of a performance. Perhaps the most critical point of the entire piece is the control of volume levels and location of the speakers. The playback level of the first recorded sequence must match as closely as possible the level of the live performer. Consequently, the piece is easier to perform if a second person is used to ride gain on the levels. The theatrics of the piece are more effective, however, if a single performer can manage all of the manipulation himself. Thus, the first consideration is to experiment with many different tape-recorder and amplifier levels. If possible, this should be done in the same environment in which the performance will take place. One level setting may work quite well for one situation and will be completely wrong for another. The performer must also have considerable practice with the foot pedal, so that the input gain to the tape recorder is neither too high nor too low. For the first two recorded sequences, the microphone input gain should be set so that complete depression of the pedal results in the desired recording level. This precaution frees the former from concern with precise pedal positions at this point. The third sequence, however, requires different pedal settings. The recorder input and output levels must be set so that various amounts of gain to the recorder result in various amounts of echo and sustained feedback as a result of interaction between the microphone and speaker fields. Then the number and intensity of the repetitions and amount of feedback is completely controlled by the performer. Since the tape echo is used only in conjunction with channel A, only that monitor speaker should be within the immediate microphone field. If the speaker for channel B is too close to the microphone, the playback from channel B could interfere with feedback effects. The placement of monitor speaker A is also critical for the acoustical mixing of the first two sequences, and obtaining the desired results will usually require a bit of experimentation. This brings up one of the basic considerations of live electronic music performance: Always plan to have as much time as possible before the concert to acquaint yourseslf with the performance environment. With this particular composition, remote control provisions are unnecessary because the performer should also have immediate access to the deck and amplifier to control the gain levels. If it is impossible to have a switching unit to redirect the microphone input, this may be done manually by the performer. A final consideration is to provide the performer with exactly five minutes of recording tape with a great deal of leader at each end. By using a timed reel of tape, it will be easier for the performer to keep track of the timing—and the extended leader will serve as insurance that the tape doesn't accidentally run off one of the reels during the record, rewind, or playback process.

Another example of live electronic performance which requires a more complex set-up is *Vanity Faire*, composed by the present writer of this manual (Allen Strange, *Vanity Faire*, Champaign, Ill.: Media Press, 1969). The sound sources for this composition are three music boxes resonated and transduced through tympani shells, a female narrator, and a pre-recorded tape. The score for the patching of *Vanity Faire* is reproduced in figure 15.2. The audio portion of the performance is produced in the following manner: A small contact microphone is attached to the head or shell of each tympani, on top of which is placed a music box. The performers then use the tympani as resonant filters by varying the tension of the head. The

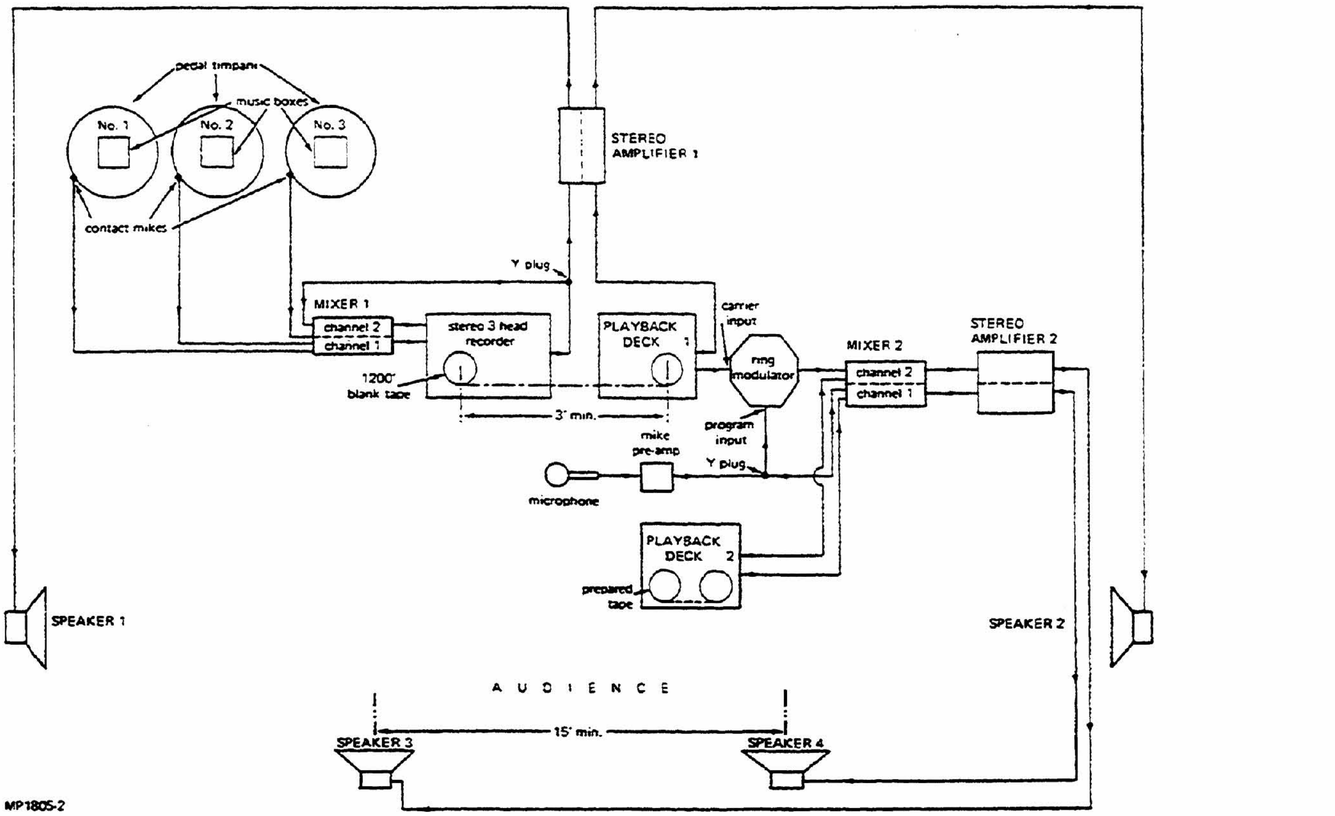

Figure 15.2. ***Vanity Faire*** **audio preparation diagram (*Vanity Faire* by Allen Strange, Media Press, 1969. Used by permission of the publisher.)**

three signals from the music boxes are mixed to a composite signal and patched to channel A microphone input of a stereo tape recorder. The monitored output is split and one leg is monitored through one channel of a stereophonic amplifier. The other leg is routed back to the line input of channel B, resulting in a delay between the two channels. The take-up reel for the recorded tape is on a playback machine located at least three feet from the recording deck. This will result in about a 4- to 5-second delay between the two monitored decks.

The output of playback channel A is taken to the other channel of the stereo amplifier and channel B is patched to the carrier input of a ring modulator. The narrator is transduced with an air microphone provided with its own separate pre-amplification. The mike pre-amp output is split, with one leg patched to the program input of the ring modulator, the other leg to channel B of a stereo mixer. The output of the ring modulator is patched to channel A of the same stereo mixer. The prepared tape is played on a third deck, with its respective outputs also patched to channels A and B of the stereo mixer. Channel A of the mixer then contains the ring-modulated product of the narrator's voice and the delayed music box playback, along with track A of the pre-recorded tape. Channel B contains the unmodulated amplified voice and track B of the pre-recorded tape. Both output channels of this mixer are then amplified and taken to two separate speakers. This system then provides four separate but interrelated audio outputs. From speaker 1 is heard the amplified music boxes; from speaker 2, a delayed repetition of what was heard on speaker 1, giving the impression of twice the number of music boxes; from speaker 3, the modulated voice and track A of the tape; and from speaker 4, the unmodified voice and track B of the tape. During the course of the performance, along with various rituals executed by the music box performers, the normal amplified voice of the narrator is slowly faded out while the level of the modulated voice is slowly raised. The effect is a smooth transition from intelligibility to total distortion, along with a simultaneous change in the monitored location of the voice.

In this composition the prime performer is the engineer, whose responsibility it is to keep the levels at a constant relationship and to guard against acoustical howl which is likely to occur when working with high microphone levels. With this composition the performers must be aware of the "precedence effect." That is, in most locations in the hall the amplified voice will take precedence over the unamplified voice. This is because location is largely determined by what sounds reach the ear first. Since signals travel along wire faster than through air, the speaker will usually appear to be the direct source of the sound. In this case the precedence effect is desired and adds to the transitory passage between the normal and modulated voice.

The Concert Set-Up

Working with this equipment in a real-time situation puts the performer in a very vulnerable position. In the past the performer had to rely only on his own technical ability to assure successful performance, but with live electronic music performance he must also depend on the reliability of the equipment. If any part of an electronic network should suddenly not work up to the standard expected by the performer, the success of the entire performance is in jeopardy. Because of fear of suddenly being "unplugged," many composers and performers have avoided the electronic medium as a means of expression. Murphy's Law, "If anything can go wrong, it will," is especially applicable in electronic performance situations. For just this reason, performers must have a thorough knowledge of the equipment, an almost over-organized approach to the concert ritual, and must anticipate problems which could interfere with the performance.

The first consideration of any performance situation is the performance space itself. The performer should sit silently in the audience area and listen, in order to acquaint himself with ambient sound levels. Just as recording tape has a certain signal/noise ratio, so does any environment. This consideration is very important when setting amplification levels and getting correct balances. The performer should next check the liveness and reverberation of the area. Any excessively reverberant area should be avoided when placing speakers, since a very live hall will often destroy the effects of amplified sounds, especially when spatial parameters are important. Very reverberant environments may be dealt with by placing the speakers as close to the audience as possible. In placing the speakers, one should also refer to any special instructions in the scores. If the score calls for monophonic amplification, should more than one speaker be used? Should the audience be totally surrounded by speakers? If the amplification is stereophonic, or multichannel, how should the speakers be located? Should there be more than one speaker per channel? All of these questions involve speaker-to-space coupling and depend on the particular environment and the intentions of the composer. In consideration of this, the guiding principle is that all of the sound should be distributed equally throughout the environment so that it is properly perceived by all of the audience. This

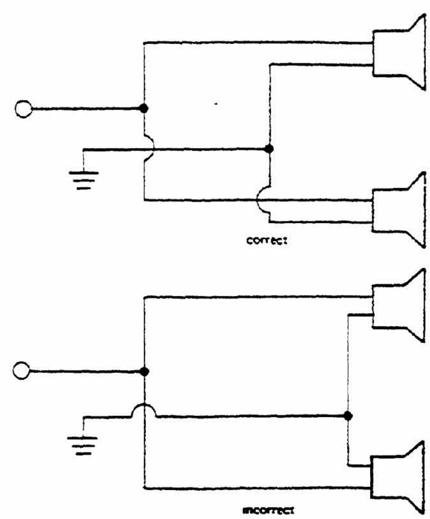

Figure 15.3. Phasing for stereo speaker systems

may involve a certain amount of experimentation before the correct combination of speakers and their location is found. As a general rule, the best listening area for true stereophonic amplification begins at a distance in front of the speakers which is equal to the distance of their separation. This ideal listening field extends to a distance twice the distance between the speakers. If the audience area extends back 24 feet, the two speakers should be placed about 12 feet apart and 12 feet from the first row of the audience. The addition of a third middle speaker which produces a mix of both outside channels will allow for a wider separation of the speakers and produce a wider sound field. With many of the contemporary audience/performer relationships, the seating area is not always predictable, and again the performer is required to rely on his judgment of the environment and the intended results of the performance for correct speaker formats. There are two basic rules which should be followed in any type of speaker configuration, however. First: *Be sure all speakers are in phase.* This means that the amplifier output terminals must all be in the same relationship to all of the speaker terminals. Amplifier terminals are usually labeled "ground" and 4, 8, or 16 ohms. It doesn't matter what side of the speaker the ground is connected to as long as it is consistent with each speaker in the system. Figure 15.3 illustrates correct and incorrect phasing for a single stereo system. Phasing is very critical, since its neglect could result in phase distortion or cancellation of the signal. This is especially important when working with monophonic sources. Many times a very long speaker cable is required and it is difficult to keep track of which side of the twin-conductor wire is to be connected to which side of the speaker. Most speaker cable, the preferred being #18 zip cord, has a small ridge running the entire length of one of the

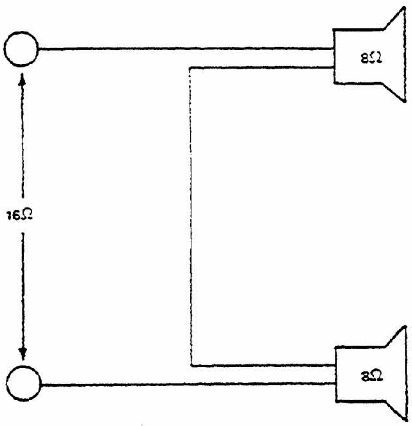

Figure 15.4. Series speaker connections

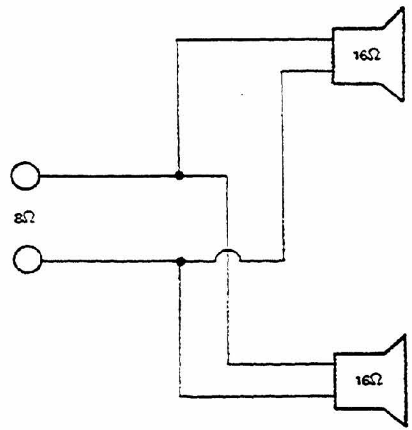

Figure 15.5. Parallel speaker connections

wires. In trying to remember which side of the wire goes to what side of the speaker and amplifier, the neumonic device "ridge right" will serve as a reminder that the side with the ridge always connects to the right amplifier terminal and the right speaker terminal.

The second basic rule in consideration of speaker connections is multiple speakers. Two or more speakers may be connected to reproduce the same signal in one of three manners: series, parallel, and series-parallel. Series connection can be thought of as sort of a loop between the amplifier outputs and the speakers. As shown in figure 15.4, the speakers are connected with the terminal for one speaker providing the input to the next successive speaker. With series connection, the speaker resistance is additive. If both speakers in the above example had 8-ohm ratings, they should be connected in series to a 16-ohm amplifier output. Parallel connection, as shown in figure 15.5, produces a resistance equal to the speaker impedances divided by the number of speakers. If both speakers in figure 15.5 were 16 ohms, they should be connected in parallel to an 8-ohm amplifier output. In some instances a multiple-speaker configuration is desired, which will maintain the original rating of a single speaker. In this case a series-parallel connection is used as illustrated in figure 15.6. If all the speakers in the configuration were rated at 8 ohms, the leads would be connected to an 8-ohm amplifier output. When working with transformerless transistor amplifiers, series or parallel speaker connections are not quite as critical, but the performer might consider the economics involved—series connections usually require less wire.

A final consideration in relation to speakers is how much power they can be expected to handle. Since much electronic music utilizes extremes of loudness, amplifers for it must be able to supply a minimum of 40 watts per channel (rms), and the speaker system must be able to handle this load with minimum distortion at both ends of the audio spectrum. When loudness begins to distort the speaker response and cause

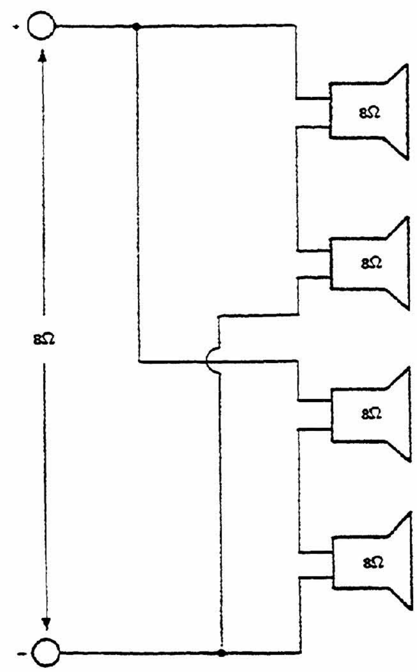

Figure 15.6. Series/parallel speaker connection

phase variations, the gain should be reduced to a more efficient level, or more efficient speakers must be used. Loudness is only effective if it also involves faithful signal reproduction. Many times higher gain levels may be simulated by using multiple-speaker systems. In this event speaker placement plays an important role in achieving the desired effects.

The location of the speakers should also be made with consideration for *all* of the works to be presented in a particular concert. Attempting to re-patch speaker connections often results in tremendous confusion and adds one more thing for the performer to be concerned with during the course of a performance. If it is absolutely necessary to re-wire speaker connections during a concert, try to plan the concert so this may be done during intermission. If this is not possible, make use of a speaker selector switch. Nothing can destroy the mood of a concert faster than someone running about between pieces armed with a screwdriver.

After all of the speakers are properly located begins the actual setting up of the various components used for each composition. Experience has revealed one very important rule for live presentations: *Have one, and only one, person responsible for the set-up of each composition.* Just as too many cooks spoil the broth, too many audio technicians unplug the connections. With one person in charge, organization will be his own and things will run much more smoothly than if two people are trying to plug into the same jack. The person responsible should know thoroughly the workings of the composition and have previously drawn a patching diagram of it from which to work. If at all possible, each composition should have its own set of components which are separate from the other components used in the other pieces on the same concert. If it is absolutely necessary to interchange components from piece to piece, the concert coordinator should make an exact plan for what is needed for each separate piece, how and when and from where the exchange is to be manipulated, and to plan the concert so that most of the re-patching is done during an intermission.

When the actual set-up begins, the first thing to do is *Connect the speakers to the amplifier outputs.* This safeguards against damage to the amplifiers. If the amplifiers are switched on without having a load on the output, there is great danger of burning out the output transformers. When laying the cable for the speakers, do not spare the masking tape. Tape all speaker and AC cable to the floor and to the legs of the table holding the equipment. If there is even the remote possibility of someone tripping over a wire, it will certainly happen. When laying speaker cable and AC cable, consider audience interference. Avoid running wire through any area where people may congregate. Also take care that an AC line does not cross over or run parallel to or come in direct contact with a speaker cable. This is often the cause of a very annoying 60 Hz hum in the speakers. Once all of the components are in place, it is a wise practice to tape them to the table so they won't be moved or accidentally unplugged.

Do not plug in the AC cords until all components are connected. This will ensure that no components are switched on without a load. This also applies to devices which contain their own DC batteries. If some mixers are turned on without a load, there is danger of causing resultant noise in the transistors. Some performers prefer to set up concerts with all the components switched on so that it is possible to check the continuity of all the connections during the patching process, their reasoning being that it is thus easier to locate a bad connection or broken patchcord if each component is checked as it is being patched into the network. It is this writer's opinion that the time saved by this approach is usually less than the additional time required in turning the amplifier gain up and down and switching components on and off while connecting the various patchcords. If the performer has provided himself with a diagram of the network, there will usually be very few problems encountered in tracing down bad connections. As for component failure, it is good practice to use fresh batteries for every concert and to check all patchcords before they are used. This can be done with a continuity tester or a VOM.

After all of the components are patched together, the performer should again refer to his check list and double-check all connections. No matter how experienced he is, there is always the possibility he has forgotten something. Even after he has set up a particular performance situation so many times that it is done almost automatically, the wise performer will still refer to a check list.

After all components have been checked and double-checked, plug in the AC, turn on the power switches and turn up the gain to check for noise. The five principal causes of noise in a network are—

1. Faulty patchcord: or loose connections. First make sure all plugs are securely set in their sockets. If noise persists use the VOM or continuity tester and re-check all patchcords and speaker connections.
2. Impedance mismatch. Double-check to see that all input transducers are correctly pre-amplified and are terminated in the correct power amplifier input. Check that speakers are terminated correctly.
3. Grounding. If nothing else helps, use jumper cables to interconnect the ground potentials of the various components. Also try reversing the polarity of the AC supply (reverse the plug).
4. AC cables over speaker cables.
5. Audio being powered from the same circuit as the lights or other video circuits. Neon lights are one of the most common causes of a noisy network as well as adding considerable ambient noise to the room.

Once the performer is satisfied with the audio portion of the set-up, he should be concerned with the visual aspects. Go out into the audience area and quietly concentrate on how the set appears. Is it visually coherent with the composition? Many times a sloppy nest of wires and stack of components can be so distracting to the audience that it interferes with the presentation of the performance. On the other hand, a visually complex network can add a certain degree of mystery to the situation. In any case, the network should be neat, if not for the sake of the audience, then for the sake of a smoother performance. Many live electronic music compositions are conceived with various degrees of theatrical involvement and consideration of the theatrics of the set-up should certainly not be ignored.

Just as important as the approach one takes in setting up the concert is a disciplined wrap-up. The fastest way to misplace equipment is to have an unorganized approach to breaking down the set-up. The first thing to be done is to turn down all gain levels, switch off all power supplies, and then unplug the AC cables. It is good practice either to remove the batteries from the DC-powered components or to use masking tape to tape all switches in the off position. When unplugging patchcords, all adaptors should immediately be put in a small box and placed in a tool kit or some other permanent storage place. Adaptors are expensive and are usually the first things to be lost. Performers who are involved with a great many live electronic performances usually carry their own tool kit containing all of the things listed in sections 2 and 3 of the check list on this page. To avoid placing tools, cords, and adaptors in the wrong tool kit, many performers color code all personal property with strips of colored plastic tape. During the wrap-up, this will also expedite finding out which cords and adaptors belong to whom. All speaker cable and extension cords should be carefully wound and neatly stored. Many needless hours have been spent before concerts untangling nests of wires and cords.

The traveling performer must be even more conscientious about the wrap-up. All components must be carefully stored in a trunk so they can't be damaged while being moved. Large pieces of poly-form material and blankets are useful for this. Some performers even have special bags and boxes for individual components to protect them from scratches caused by the treatment they receive during shipment. One very important word to the traveling performer is to expect nothing in the way of equipment from your concert host. Call ahead to confirm what equipment is available, but even then plan to use your own amplifiers and other components, since you are more familiar with them. The only thing you should really expect to find is an adequate speaker system. If one isn't available, have the host rent one for you. A concert pianist is not expected to perform on a studio upright, and by the same token, the electronic music performer has the right to adequate facilities.

The following checklist was developed by Pauline Oliveros for students in the electronic music performance classes at the University of California at San Diego. This approach has served to simplify many concerts and is well worth referring to every time any type of electronic music network is being set up.

Checklist for Performance Electronics

1. POWER SOURCE
   a. Number of circuits needed? Separate audio from video. Beware of halls with stage or room light dimmers. The SCR circuits cause hum with low level signals such as mikes and guitars. Always insist on an isolated circuit for the audio power.
   b. Load? Allow 1 amp for 100 watts.
   c. Number of AC receptacles needed?
   d. Number and length extensions cords needed? Do not use home extension cords, especially with projection equipment. They often cannot handle the load and can burn out. Even if everything checks out initially, continually loading down the line will cause it to overheat and may burn out during the performance.
   e. Number of 2- to 3-prong AC adaptors or vice versa needed?
   f. Spare fuses
   g. Fresh batteries
2. TOOLS AND SUPPLIES
   a. Set of screwdrivers—ordinary and phillips head, small to large
   b. Soldering iron and solder
   c. Long-nose pliers
   d. Regular pliers
   e. Awl
   f. Scout knife
   g. Wire strippers and cutters
   h. Flashlight
   i. Scissors
   j. Electrical tape
   k. Masking tape
   l. Continuity tester or VOM
3. CABLES, CONNECTORS, AND ADAPTORS
   a. Set of alligator clip heads
   b. Assorted length phono to phono cables
   c. Complete set of adaptors
   d. Zip cord #16 or #18
4. BASIC SOUND SYSTEM COMPONENTS

Transducer → Pre-amp → Power amp → Speaker

   a. TRANSDUCER (i.e., microphone, tapehead, phonograph, cartridge, etc.)
      (1) High-level or low-level? Impedance? Is transformer necessary?
      (2) Output power? Does it match input of pre-amp?
      (3) What kind of connector does it have? Is an adaptor necessary?
      (4) Power supply?

b. PRE-AMP
   (1) Impedance at output?
   (2) Output? Does it match input of power amp?
   (3) Input and output connectors?
   (4) Power supply
   (5) Gain controls?
   (6) Equalization controls?

c. HIGH-LEVEL SOURCES (tape decks, synthesizers)
   (1) Final mixer—correct input impedances?
   (2) Input and output connectors?
   (3) Output impedance? Certain instruments have "high" and "low" level outputs. If you patch directly to a power amp, use the "high" level output. If your monitor amp is an integrated amplifier (like a guitar amp), use the "low level" output. When using a commercial integrated amp such as the kind used for typical home stereo systems, patch from a "high" level output to the "spare" or "auxiliary" input.
   (4) Visual considerations? Remember, you are performing in the theatrical sense of the word. Is your set-up and staging effective both in terms of convenience and effective stage design?

d. POWER AMP
   (1) Impedance?
   (2) Output power? Will it drive speakers efficiently?
   (3) Tube or transistor? What cautions to be observed in loading the amp?
   (4) Cables and connectors needed?
   (5) Power supply?

e. SPEAKERS
   (1) Impedance?
   (2) Efficiency?
   (3) Frequency response?

f. BASIC SAFEGUARDS AGAINST MURPHY'S LAW

   The most amazing and unexplained things can can happen before and during a concert. Even with the most careful set-up mysterious hums, and buzzes will crop up! When this happens (and it will) double check *all* connections. A common cause of hum is a ground loop somewhere in the patching. If you cannot locate the source of the hum and no other remedy works, try reversing the AC plugs to the power source. If the instrument uses a 3-prong plug disconnect the ground plug with a 3 to 2 adaptor. Double check that speaker and mike lines do not cross or touch power lines.

   SCR light dimmers and florescent lights can cause problems. Make sure you have isolated circuits for the audio. Touch-sensitive keyboards are susceptable to SCR environments. If the keyboard is sending out unexplained information, try grounding *yourself* to your instrument. A patchcord under your sock to any system ground works fine!

The rituals involved with electronic performance are still quite new, the instrumentation is still somewhat limited, and the techniques are still very primitive compared to what contemporary technology suggests will come in the futre. The composers and performers are forced to work in unfamiliar areas, often with unfamiliar equipment and with new approaches to the concert ritual. Consequently, they should approach the performance with as much technical knowledge, organization, and professionalism as possible. Performers can no longer shun electronic music because they feel it is attempting to eliminate the performer. Live electronic performance is a logical and unavoidable development in the art of manipulating sound, and performers must learn to work with it on a professional level. The tape recorder and oscillator are real-time performance instruments in the same tradition as the piano and flute and must be treated with just as much artistry and understanding. The contemporary music instrument repairman must know as much about circuit design and troubleshooting as he does about replacing saxophone pads or re-hairing a violin bow. To paraphrase some statements of Marshall McLuhan: The true artist, no matter what his field or area of interest, is the person who can realize and utilize the implications of his art and its relationship to the new knowledge of his own time and environment.

16 Scores for Analysis and Performance

The purpose of this text has been to provide the musician with enough understanding of electronic music instruments that she/he can ultimately take part in some music making. Performances, whether on tape or in live concerts, call for a myriad of skills and insights that come from practice and experience. It seems practical therefore to present some scores for the reader to consider. These scores have been selected because they represent a variety of approaches to aesthetics, notational practices, and each is designed around a different instrument.

The scores are present here just as they have been notated by the different composers. It will not be possible to realize every configuration, as notated, on a single instrument. It is therefore advisable for the reader to thoroughly analyze each patch and then renotate the configuration for his/her own resources. In many instances a multi-function module may have to be patched together from several single function modules. In other cases a single module on one instrument may take care of several functions another instrument design requires two or three modules to handle. Even if realization on your instrument is impossible, the score/patch analysis will present some performance and/or compositional insights which will undoubtedly be of use in your creative development.

Entropical Paradise (with Bird Call) by Douglas Leedy

This composition is a self-playing dream machine; the offsets and control processing are open to a wide range of variation. Although the work was realized on a Buchla 100 Series instrument the score is notated in such a way that it may easily be transferred to practically any modular instrument. The composer notates the patching of the various modules with simple, written instructions, first indicating the patches which carry the audio information and then the patches for the control voltages. The pot settings are graphically indicated by providing a diagram for their individual positions. Since the performance instructions allow the control setting to be varied at will, precise notations for the pot settings are not required. The indications on the score may be used just as a point of departure. As an aid in tracing the interrelated functions of all of the modules, figure 16.1 is provided as a flow-chart or graphic representation of the score. The only deviation from the original score is the voltage-controlled mixers (1-5 and 6-10). They are actually not used as mixers but rather provide a gating function. Therefore the flow-chart does indicate them as gates (voltage-controlled amplifiers).

Here are the numerical approximations of the control settings indicated in the score:

Channel A output mixer	Channel B output mixer
input 1—30 percent gain	input 1—50 percent gain
input 2—60 percent gain	input 2—60 percent gain

Reverberation A and B—50 per cent

Voltage-controlled mixer (indicated as VCAs)

VCA C—100 percent gain	VCA D—100 percent gain

Voltage-controlled amplifiers*

VCA A—100 percent gain	VCA B—100 percent gain

Envelope detector
- Sensitivity—60 percent
- Decay Time—1 second

Sine-sawtooth oscillators (externally voltage-controlled)
- VCO 1 waveshape—0 percent harmonic distortion
- VCO 2 waveshape—30 percent harmonic distortion
- VCD 3 waveshape—30 percent harmonic distortion

Control voltage processor—Setting "1" indicates the proportion of combined external and internal voltages. Setting "2" indicates the internal voltage setting. Setting "3" indicates the mixing proportion of the two external voltages.

*Refer to page 25 for information regarding the Buchla 100 Series VCAs.

CVP 1A

(1) 9/10
(2) 7.5 volts DC
(3) 1/1

CVP 1B

(1) 4/5
(2) 5 volts DC
(3) 3/2

CVP 2A

(1) 1/2
(2) 7 volts DC
(3) 3/2

Attack generators I and II
Attack time—0.05 seconds, decay time—2.0 seconds, sustain time—0.01 second

Timing pulse generators I and II
repeat mode pulse length—50 percent
firing rate—external control

Sequencer I:
Bank A—3/5/7/7/3/2/9/5
Bank B—15/5/.05/.05/3/7/15/5
Bank C—05/7/15/.05/3/7/.05/8

Sequencer II: DC voltage setting for each increment—indicated in DC voltage
Bank A—9/9/10/10/9/8/8/8/7/8/9/7/8/8.5/8/8.5

Output channel A consists of information supplied by VCO 1 and 2. The frequency of VCO 1 is determined by the DC envelope supplied by the envelope detector. The particular envelope shapes will be quite random, since they are the result of detecting "pink" sound (low-frequency component white sound). This is the part of the system which contributes the "bird call" effects. The amount of frequency activity can be varied by manipulating the sensitivity and decay-time controls on the envelope detector. If a pink sound source is not available, it would be possible to use a white sound generator in conjunction with a low-pass filter. The amplitude of VCO 1 is continually varied by processing the output signal through VCA C. The control voltages for this gate are derived from the third increment bank of sequencer 1. The firing speed of this sequencer is controlled by the trigger output of timing pulse generator 1 (TPG 1). In turn, the firing speed of the trigger pulses is randomly varied by the DC output of random voltage source B (RVS B). Since the random voltage source will not produce an output voltage unless cued by a trigger pulse, another timing pulse generator (TPG 2) is used to provide the needed triggers. The firing rate of TPG 2 is externally determined by another voltage which originates with TPG 1. TPG 1 provides alternate trigger pulses for random voltage source A, which produces random envelopes of DC voltage. These envelopes are then inverted and mixed with the internal voltage of control voltage processor (CVP 1B) and then patched to the external "period" input of TPG 2, thereby determining its firing speed.

The frequency of VCO 2 is controlled by a mixture of DC voltages. A continuous sequence of voltages are provided by bank A of sequencer 1. The second voltage is a series of random envelopes produced by the same random voltage source being used to control the firing speed of TPG 1. These two voltages are then mixed with the internal voltage of a voltage control processor (CVP 1A) and used to control the frequency of VCO 2. The amplitude of the frequencies produced by VCO 2 is regulated into a series of attacks and decays by an attack generator (ATG A) which has an attack time of approximately .05 second, decay of approximately 2 seconds, and a duration of .01 second. Of course these settings may be varied at any time by the performer. The trigger cues for this attack generator are the same triggers used to fire the random voltage source providing voltage for the VCO under discussion. Before the output of VCO 2 reaches the final mixing stage, it is subjected to various amounts of artificial reverberation.

Output channel B consists of information supplied by VCO 1 and VCO 3. VCO 1 also supplies a signal for output channel A. In this case, the amplitude is controlled with a separate voltage-controlled amplifier (VCA D) which is programmed by bank C of sequencer 1. VCO 3 is controlled by a mixture of several DC voltages in much the same manner as was VCO 2, the difference being the point of origin of the two external voltages. One source is sequencer 2, which has twice the number of increments as sequencer 1. This sequencer is triggered by pulses from timing pulse generator 2, which also provided triggers for random voltage source B and attack generator A. The second voltage source is the envelope output of the controlled voltage processor 1B, which also determines the firing speed of timing pulse generator 2. The amplitude of the signal produced by VCO 3 is controlled by voltage-controlled amplifier B. The program voltage for this VCA is provided by attack generator B, whose attack and duration times are about the same as ATG A, but whose decay time is about 2.5 seconds. The triggers used to fire attack generator B are supplied by timing pulse generator 1, which is also the trigger source for sequencer 1. The output of VCA B is then subjected to varying amounts of reverberation as was the output of VCA A. The final signal is mixed with the output of VCA D to comprise output channel B.

Entropical Paradise with Bird Call is an excellent example of how the various modules in a system can be interrelated to perform a variety of functions. It also demonstrates how output voltages can be fed back to control the functions of the initial voltage-producing modules. When all of the required patches are made, ENTROPICAL PARADISE with bird call

for Buchla Synthesizer

position of control knob

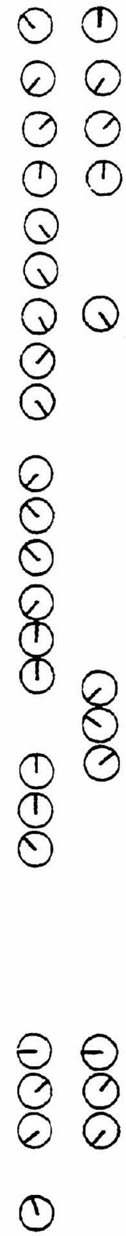

AUDIO PATCHES

Mix — Output to amplifier 1-3 left channel (A)
4-6 right channel (B)
Inputs to left channel (A)—1 from Voltage Controlled Mixer 1-5 out (Gate C)
2 from Reverb A out
Inputs to right channel (B)—1 from Reverb B out
2 from Voltage Controlled Mixer 6-10 out (Gate D)

Reverb — Inputs A from Voltage Controlled Gate A out
B from Voltage Controlled Gate B out

Voltage Controlled Mixer (Gates C and D) — Inputs 1 (C) from Sine-Sawtooth Generator 1 out
Inputs 6 (D) from Sine-Sawtooth Generator 1 out

Voltage Controlled Gates — Inputs A from Sine-Sawtooth Generator II out
B from Sine-Sawtooth Generator III out

Envelope Detector — Input A from Pink Noise Generator out

Optional: White Noise Generator to Sine-Sawtooth Generator f-m input; Pink Noise Generator to Sine-Sawtooth Generator III f-m input. Vary percent modulation

CONTROL VOLTAGE PATCHES

Sine-Sawtooth Generator I — Input from Envelope Detector output—*ext*

Sine-Sawtooth Generator II — Input from Control Voltage Processor IA output—*ext*

Sine-Sawtooth III — Input from Control Voltage Processor IIA output—*ext*

Control Voltage Processor IA — Input L from Random Voltage Source B out
Input R from Sequential Voltage Source IA out

Control Voltage Processor IB — Input R (inverting) from Random Voltage Source A out

Control Voltage Processor IIA — Input L from Control Voltage Processor IB out
Input R from Sequential Voltage Source IIA out

Random Voltage Source — Input A from Timing Pulse Generator I *alternate* out
Input B from Timing Pulse Generator II *all* out

Voltage Controlled Gates — Input A from Attack Generator output A
Input B from Attack Generator output B

Attack Generator — Trigger A from Timing Pulse Generator II *all* out
Trigger B from Timing Pulse Generator I *all* out

Timing Pulse Generator I — Period in from Random Voltage Source B out

Timing Pulse Generator II — Period in from Control Voltage Processor IB out

rep
int
ext

Sequential Voltage Source I — Pulse input from Timing Pulse Generator I *all* out

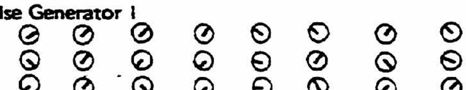

Sequential Voltage Source II — Pulse input from Timing Pulse Generator II *all* out

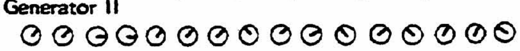

Voltage Controlled Mixer (Gate C & D) — Input 1 (C) from Sequential Voltage Source 1C out
Input 6 (D) from Sequential Voltage Source 1B out

Note: Any control setting may be varied at will. The Control Voltage Processor and Sequential Voltage Source settings given here will result in a randomly self-programming program which, once initiated, seems to require no further attention.

Douglas Leedy
Santa Monica
March 1969

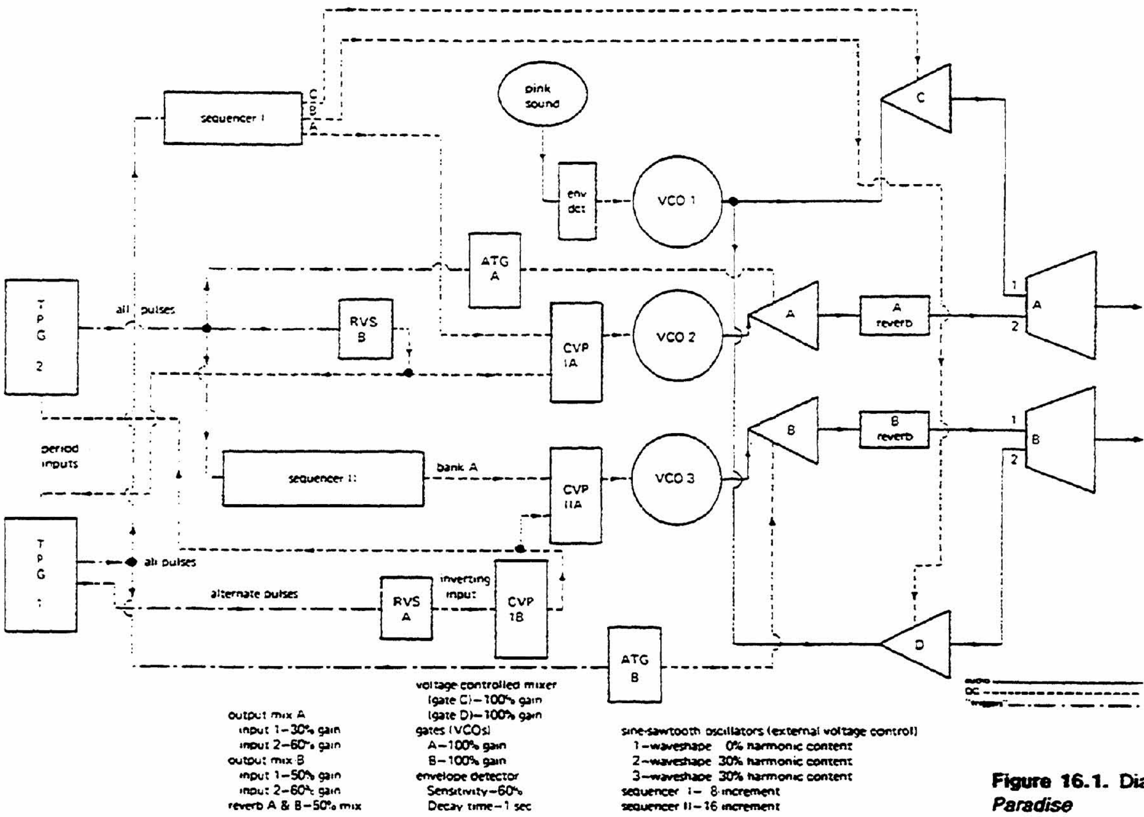

Figure 16.1. Diagram for *Entropical Paradise*

this system will be self-generating and require no further human control. Other real-time compositions may utilize a performer to execute patching changes or provide necessary pot setting changes. Real-time electronic music compositions need not be limited to the modules found in a particular system. Very often tape recorders are used as part of the processing network, as described in chapter 10. Any other external device may also be used in a real-time performance, the only requirement being portability to the performance area and compatibility with the other equipment. Although one advantage of real-time networks is the elimination of several source tapes and the dub-down process, the actual importance of a real-time system is that it makes the electronic music system function as a true performance instrument.

Stochastic Arp by Frank McCarty

This is another automated dream machine which requires little or no player input, other than making the patch. Designed for an ARP 2500, the instrument produces a finely correlated but highly random series of events. The general patch is illustrated in figure 16.2. Although three VCOs are used, the only "voice" is VCO 1. It derives its pitch control from an inverted random voltage source and from the output of Sample/Hold 1. Both Sample/Holds are receiving their sample commands from VCO 2, set for a variable pulse wave, and its frequency is being controlled by Sample/Hold 2. In other words, VCO 2 is telling Sample/Hold 2 to pick out a random voltage which, in turn, determines the pulse rate of VCO 2—thus determining the sample rate of Sample/Hold 2. Note that both Sample/Holds are essentially triggered random voltage sources. In adapting this configuration for another instrument, a triggered RVS could be substituted.

The spectrum of the voice (VCO 1) is being determined by two band-pass filtered patched in series/parallel, the signal being processed by Filter 1, then patched to Filter 2, and the same signal patched, unprocessed, to Filter 2. Both Filters are being controlled by the Slow Random Voltage Source; but note that Filter 2 gets an inverted form of the control. Filter 1 is then also controlled by Sample/Hold 1 and Filter 2 by Sample/Hold 2. The most complex control is being received by the final VCA. Here McCarty uses the ARP 1006 Filtamp. This module is a voltage controlled low-pass filter and VCA in series, packaged into the same module. Since the control specifications (see figure 16.3) indicate that the filter offset is at maximum with no filter controls attached, one can assume that a straight VCA can be used in its place. The VCA is being controlled by a sum of three different voltages: (1) the slow random voltage, (2) Envelope

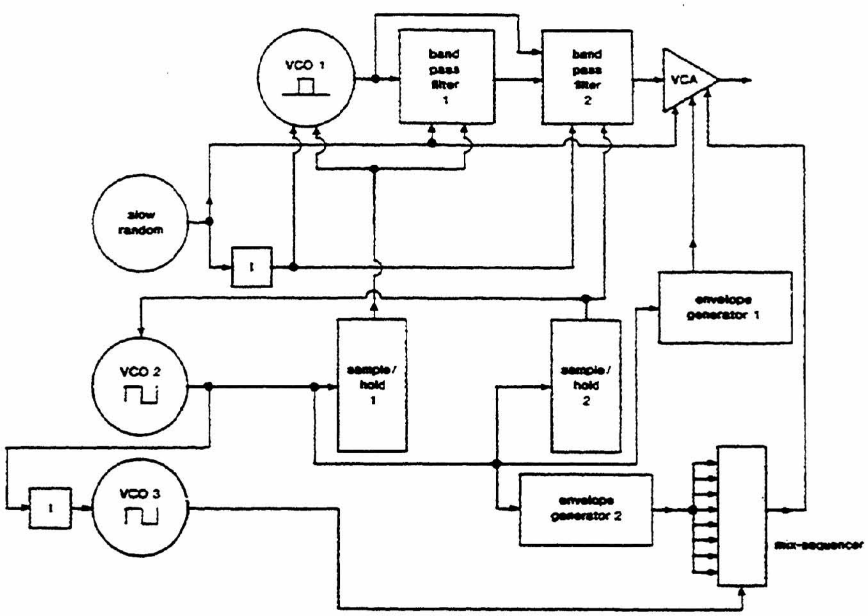

Figure 16.2. *Stochastic Arp* by Frank McCarty

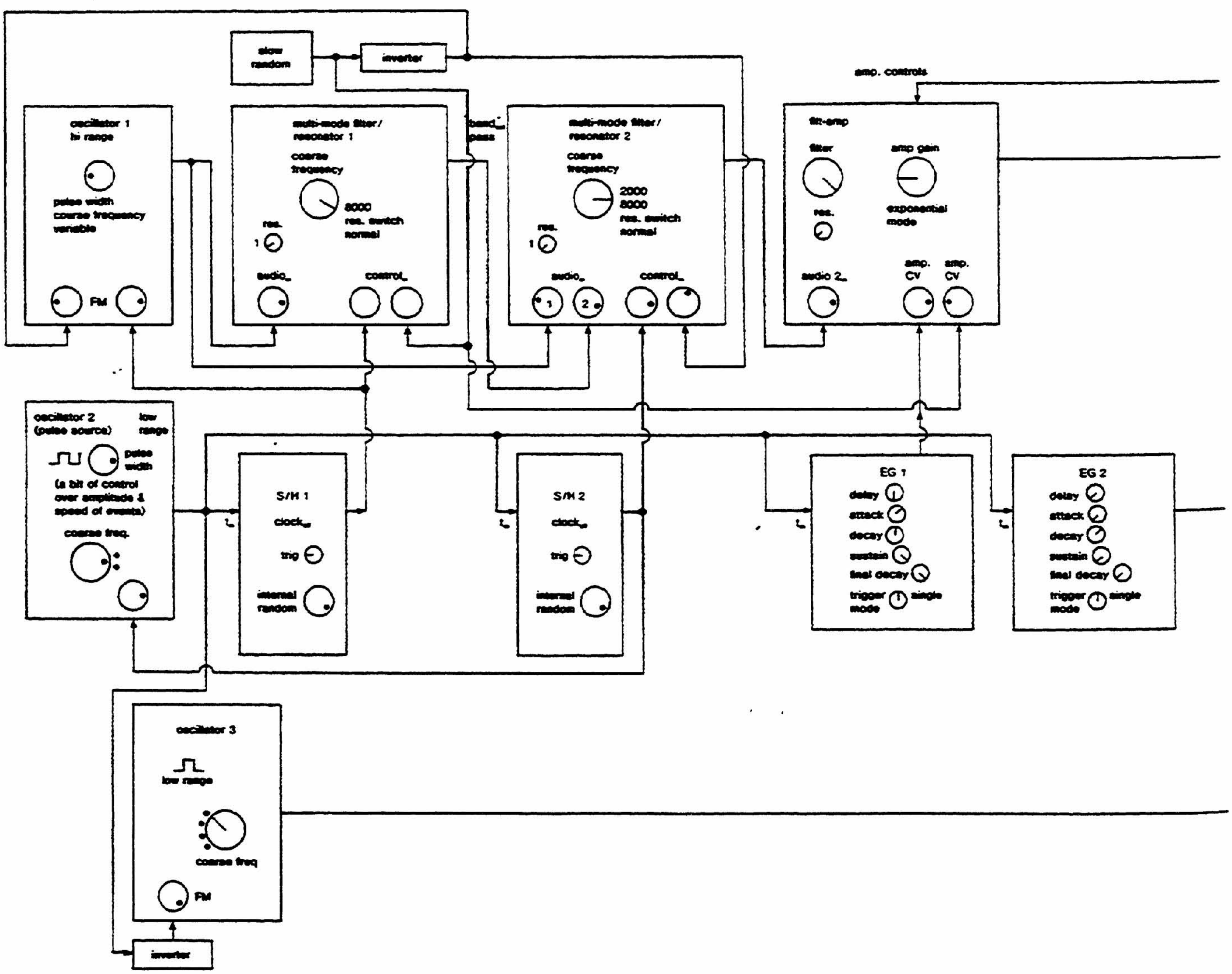

Generator 1 (triggered by VCO 2, and 3) the output of the "Mix-Sequencer." The ARP 1050 Mix-Sequencer is designed to accept a mix of either AC or DC signals and, according to a pulse advance command (in this case coming from VCO 3), it will sequence through the eight inputs, outputting each in sequential order,—sort of a sequential Track and Hold (see chapter 6, figure 6.68). The patch for *Stochastic Arp* indicates that the output of Envelope Generator 2 is connected to all eight inputs of the Mix-Sequencer, and the sesquenced output is used to control the VCA. This might seem redundant as it does no more than attach the inputs to the output! Look, however, at the Mix Sequencer attenuators in figure 16.3. Each input attenuator receiving the same envelope is progressively attenuated a bit more than the previous one. This means that as the sequencer cycles through the inputs, 2 will be attenuated more than 1, 3 will be attenuated more than 2, etc. This sort of amplitude scrambling is illustrated in figure 16.4. Although the Mix-Sequencer is a rather unique module, the process it is carrying out in this patch can be replicated quite easily with a multiplier; think about how it can be done and give it a try.

If you can logically work your way through *Entropical Paradise* and *Stochastic Arp* you are ready for just about anything! The following scores are presented without comment, other than some notational clarification. Put them through a detailed analysis and see how close you can come to what is required. You probably will not have access to each instrument required for each score, therefore try to get a copy of the instrument's instruction manual for reference and further clarification. GOOD LUCK!

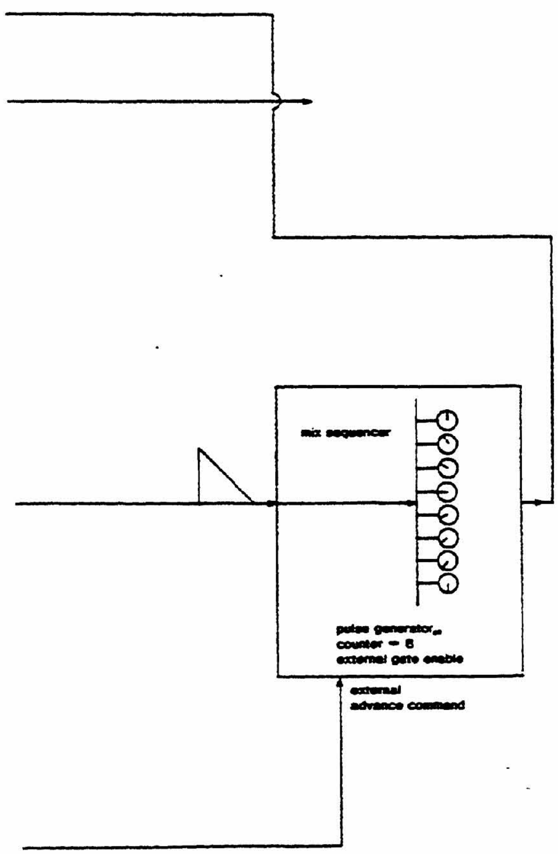

Figure 16.3. Control logic for *Stochastic Arp* by Frank McCarty

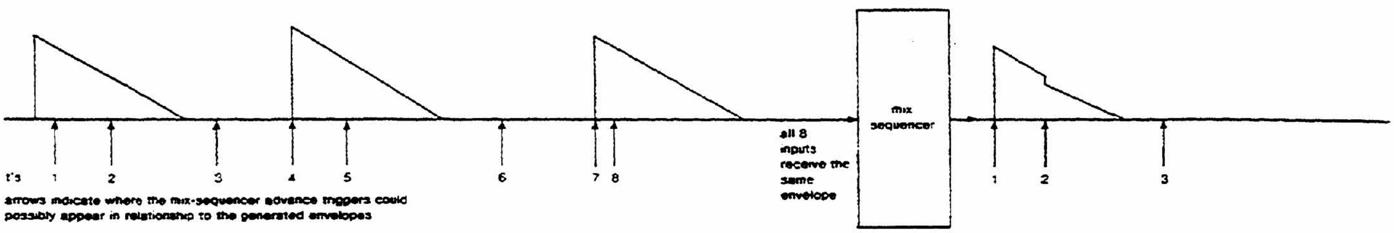

Orion Rising by Mark Styles

This beautifully scored work was realized on an Aries 300 Music System. The score and comments are reproduced here exactly as supplied by Mr. Styles.

```
   THE COMPLEMENT OF MODULES USED TO RECORD THIS PIECE
WERE:

   1 AR - 332 DUAL VCO
   2 AR - 317 VCO FOUR WAVEFORM
   1 AR - 327 MULTIMODE FILTER
   1 AR - 314 VCF
   1 AR - 318 SAMPLE & HOLD
   2 AR - 316 VCA
   3 AR - 312 ADSR
   1 AR - 331 PREAMP AND ENV. FOLLOWER
   1 AR - 315 BALANCED MODULATOR
   1 AR - 311 KEYBOARD
   2 AR - 324 DUAL LFO
   1 AR - 323 DUAL MIXER
   1 AR - 328 REVERB AND POWER
   1 AR - 321 HEX ATTENUATOR
   1 AR - 329 PHASE&FLANGE
   1 AR - 334 SEQUENCER
   1 AR - 335 SWITCHES
   1 AR - 345 DUAL VC ADSR
   1 AR - 346 DUAL TRIGGER DELAY

   THE PIECE WAS RECORDED ON A SIXTEEN TRACK MCI. TAPE
DECK AND AN A BOARD. NO STUDIO EFFECTS WERE USED (ECHO,
E.Q. REVERB, ETC.) EXCEPT FOR SOME HI FREQUENCY EMPHASIS
ON THE FINAL TAPE MASTER FOR TRANSFER PURPOSES. THE
TECHNIQUE EMPLOYED WAS TO LAY DOWN ONE TRACK AT A TIME
USING THE ARIES FILTERS AND PHASER MODULES TO ACHIEVE THE
DESIRED EQUALIZATION FOR THAT TRACK. WHEN THE DESIRED
DENSITY WAS REACHED, THE PIECE WAS MIXED DOWN TO TWO
TRACKS.
   THE SOLO VOICE WHICH HAS AN ECHO LIKE EFFECT IS
ACTUALLY A TWO VOICED PATCH USING THE DUAL TRIGGER DELAY
AND REVERB. THIS PATCH ALSO USED THE ELECTRONIC SWITCH
MODULE AS A PRESET FOR FREQUENCY MODULATION OF THE VCO'S
(SEE DIAGRAM #1).
   THE USE OF THE SWITCH MODULE WITH THE SEQUENCER
DRAMATICALLY INCREASES THE EFFECTIVENESS OF THE
SEQUENCER. DESIGNED BY RIVERA MUSIC SERVICES TO
COMPLEMENT EACH OTHER, THE SEQUENCER IS 8 BY 2 ANALOG
WITH GATE OUTPUTS, RESET, AND STEP FUNCTIONS. THE SWITCH
MODULE CONTAINS FOUR SETS OF SWITCHES, TWO 2 WAY AND TWO
4 WAY. ONE OF THE 4 WAY'S IS THRESHOLD DEPENDENT, SO THE
VOLTAGE FED INTO THE STEP INPUT WILL DETERMINE WHICH
STAGE IS TURNED ON (SEE DIAGRAM #2).
   AN INTERESTING TECHNIQUE I DISCOVERED WHILE RECORDING
THIS PIECE WAS A WAY TO EFFECTIVELY DOUBLE THE LENGTH OF
A SEQUENCE. BY USING THE DUAL MIXER IN CONJUNCTION WITH
THE SEQUENCER AND 2 WAY SWITCH YOU CAN INVERT AND BIAS A
16 NOTE SEQUENCE INTO A 32 NOTE SEQUENCE (SEE DIAGRAM
#3).
   THE STRING PATCH INVOLVES THREE VCO'S GOING THROUGH
TWO FILTERS AND A PHASER, THEN MIXED TOGETHER AGAIN. THE
FILTERS ARE USED AS RESONATOR BANKS (NO VOLTAGE CONTROL)
AND THE PHASER IS USED FOR THAT E.L.O. STRING SOUND (SEE
DIAGRAM #4). I FIND IT MUCH MORE EFFECTIVE TO OVER-DUB A
SECOND STRING PART THAN TO PATCH THE 2ND VOICE UP. THE
CHORUS ACTION SET UP BY THE LFO'S INTO THEIR RESPECTIVE
VCO'S IS LOST WHEN THE VCO'S ARE NOT IN UNISON. THIS
PATCH REQUIRES A FAIR AMOUNT OF TWEAKING TO ACHIEVE THE
PROPER BALANCE BETWEEN THE VCO'S AND THE AMOUNT OF
MODULATION EACH OF THEM RECEIVES.
   THE PERCUSSION IS CREATED USING A SINE VCO, ADSR, VCA,
AND WHITE NOISE FOR THE SNARE SOUND. THIS IS A VERY
SIMPLE PATCH BUT VERY VERSATILE. THE ADSR AND VCA ARE
DRIVEN BY THE SEQUENCER GATE OUTPUTS (SEE DIAGRAM #5).
   WELL HOPE YOU ENJOY THIS DEMONSTRATION PIECE AND FIND
IT HELPFUL IN YOUR OWN WORK. GOOD LUCK WITH YOUR
SYNTHESIZING.


   READY.

   bye

   BX00000   LOG OFF     20.23.58.
   BX00000   SRU       1.000 UNTS.
```

Figure 16.5. *Orion Rising* by Mark Styles (Used by permission of the composer.)

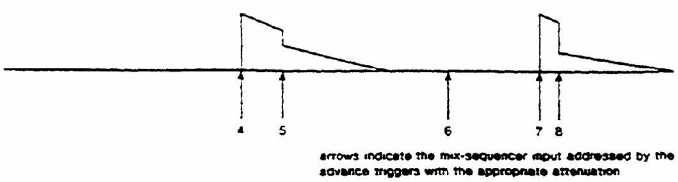

Figure 16.4. Amplitude scrambling

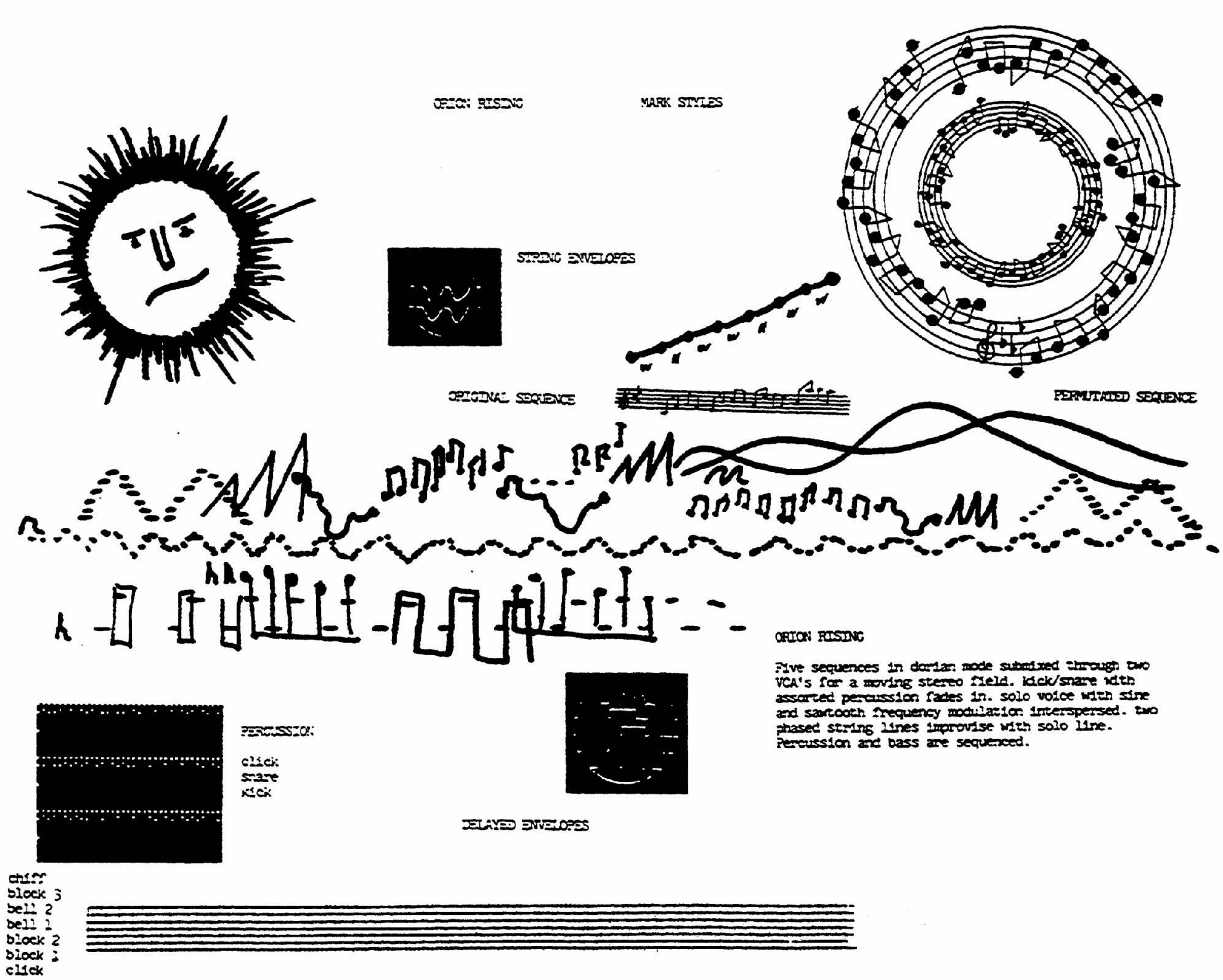

Diagram 1:

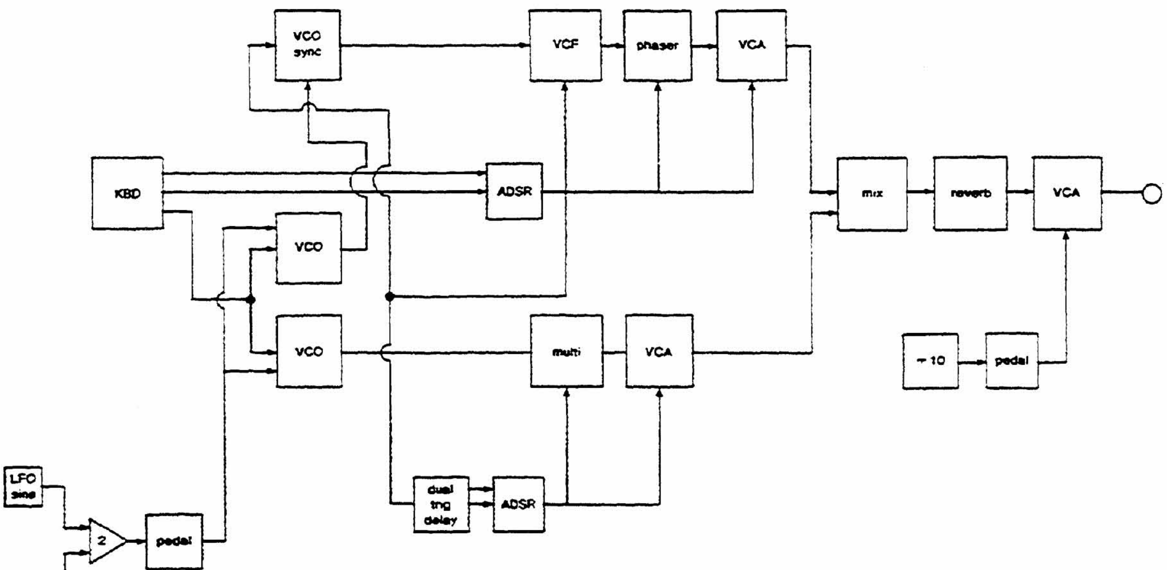

Solo voice: Note use of dual trigger delay and two foot pedals. Reverb patched before VCA gives a unique 'synthetic' sound. Two way switch is activated by the toggle.

Diagram 2:

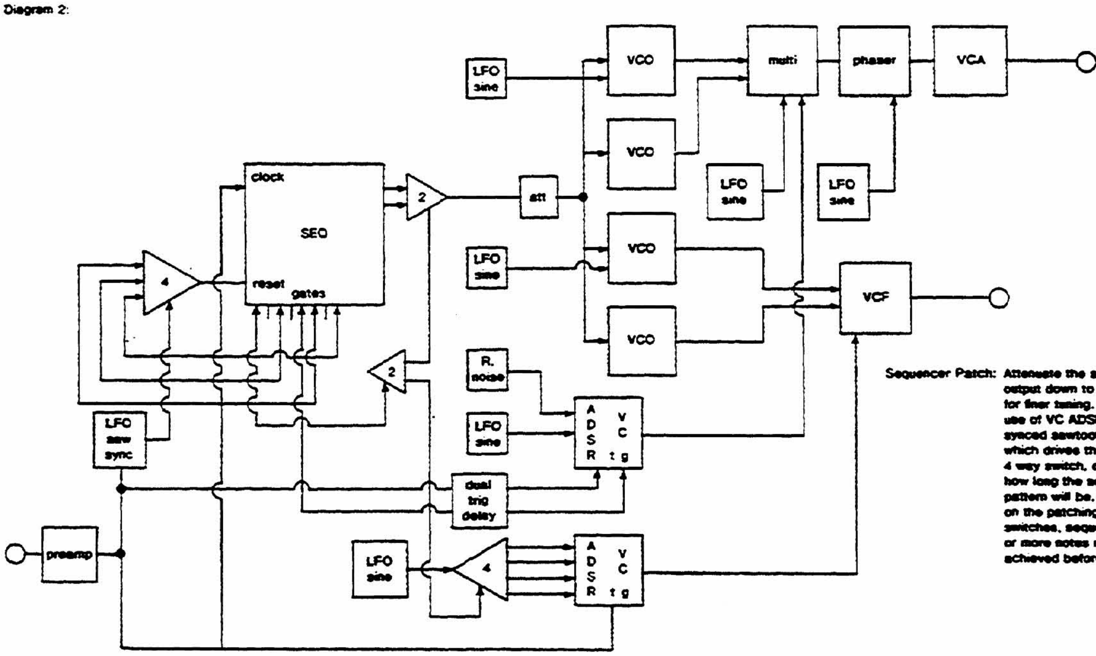

Sequencer Patch: Attenuate the sequencer output down to two octaves for finer tuning. Note the use of VC ADSR's. The synced sawtooth LFO which drives the threshold 4 way switch, determines how long the sequence pattern will be. Depending on the patching of the switches, sequences of 76 or more notes may be achieved before repeating.

Figure 16.6. Patch diagrams for *Orion Rising*

Diagram 3:

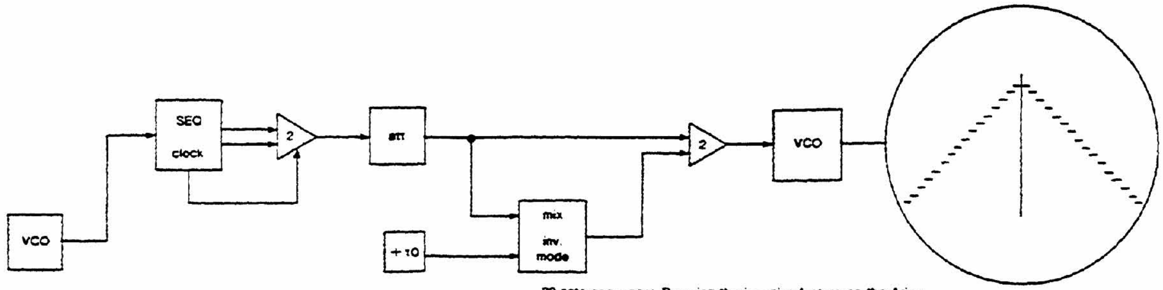

32 note sequence: By using the inverting feature on the Aries mixer a sequencer can be doubled in length. Add enough positive voltage to bring the inverted sequence up to the voltage level of the original sequence.

Diagram 4:

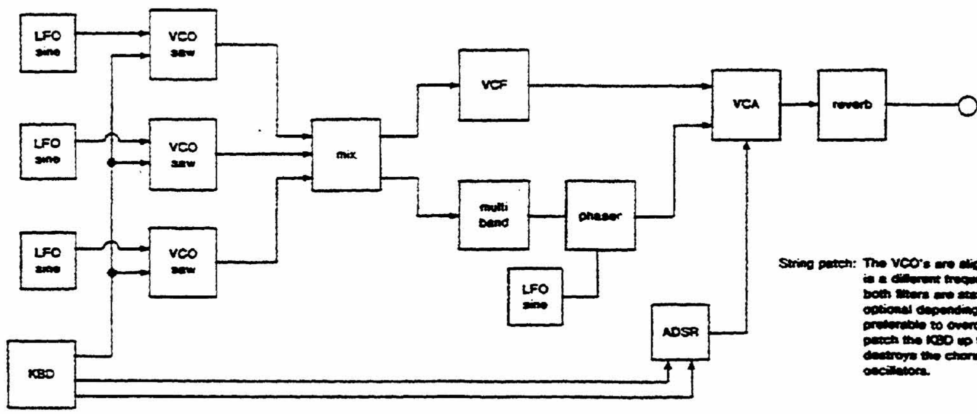

String patch: The VCO's are slightly detuned and each LFO is a different frequency and amplitude. Note both filters are stationary. The phaser is optional depending on your taste. It is preferable to overdub a second part rather than patch the KBD up for two voices which destroys the chorus interaction between the oscillators.

Diagram 5:

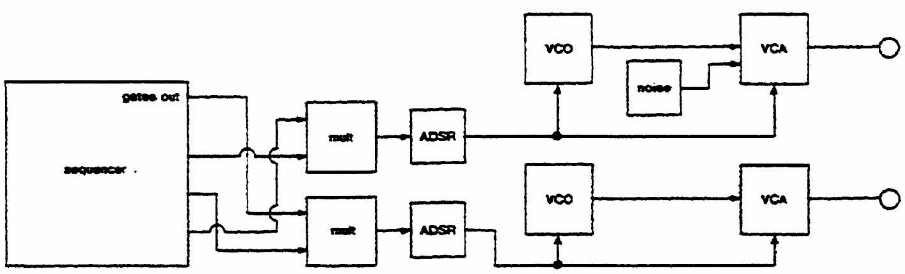

Percussion patch: The gate outputs are multed together and patched into both inputs of the ADSR. By adjusting init. frequency and amount of modulation to the VCO you can achieve different drum sounds. By mixing white noise with the proper pitched VCO you can achieve very realistic snare sounds.

Akarui Tsuki by John Strawn

This "score" is detailed instructions for the realization of a studio tape composition. The instruments were realized on a Synthi AKS using 3 different patches. Mr. Strawn has indicated the instrument patches using the Synthi AKS "Dopesheets" and also indicated the configuration in a more generalized notation. The score, again, is just as the composer has indicated.

akarui tsuki — John Strawn
in lieu of a score — October 1975

明
る
い
月

was conceived and recorded over a period of several months in the early part of 1975. I had been working all spring on developing several instruments for my own Synthi-AKS, and decided to fit some of these patches together for a concert in April. Every year, the Fulbright-Kommission in Bonn holds a conference for the Fulbright scholars in West Germany, in the course of which the Fulbright musicians traditonally present a concert; I was asked to contribute a tape.

The title which I use for catalogueing this tape was taken from a poem by Myooe (1173-1232 A.D.) which can be found in "Japan, the Beautiful, and Myself," 日本の美しい私, the Nobel Prize Essay of Yasumari Kawabata. The text might be transliterated as:

aka-aka-ya aka-aka-aka-ya aka-aka-ya
aka-ya aka-aka-aka-aka tsuki

In this chain of syllables, "aka" means "bright" ("aka" is a shortened form of 明るい = "akarui" = "bright"), や "ya" is a postposition meaning "&," 月 = "tsuki" is "moon." Note that the "ya" in its first occurrence joins the first two "aka," but that it subsequently binds the separate *groups* of "aka" together. Seidenstecker's translation reads:

the bright, bright, the bright, bright, bright, the bright, bright, the bright, the bright, bright, bright, bright moon

However, "aka" can also mean "red" (赤い = "akai"); according to Donald Keene (Japanese Literature; London: John Murray, 1953), the Japanese are fond of using such plays on words in their literature. For those of us who have seen a crimson Midwest harvest moon, "the red moon" also evokes a strong image, and thus I called the first version of this tape (see below) akai tsuki, and listed it as such on the program for the Fulbright concert. Furthermore, it would seem that this Japanese poet-mystic had used a principle similar to that common among the serialists:

$$2 + 3 + 2 + 1 + 4 + (\quad)$$

i.e. an expansion of

$$2 + 3 + 1 + 4.$$

Through his choice of words, Myooe was further able to set up a "pedal-point" on the vowel "a" (pronounced long, as in "father"), and punctuate it with "k" and "y," the rhythm preparing for and then spanning a big leap (4 "aka") to culminate in the totally new "tsuki."

However, this title has nothing to do with the composition, either as an outline of the "form," or as a "clue" as to what "associations" I might be wanting to "evoke" with this piece. 明るい月 and "akarui tsuki" are simply convenient ways for me to keep track of the tape.

The concert was held in the hall of the Amerika-Haus (a USIA institution) in West Berlin, which had just been outfitted with a new Sony system. I had at my disposal six speakers for two channels, the speakers being arranged in the ceiling of the hall in the following manner:

1	2	3	4
5	6	7	8
9	10	11	12

A quad system had also been installed in the hall, but was not yet hooked up.

Fortunately, I was able to produce some test tapes with the sound material I intended to use, and to try them out in the hall before recording the final tape. The hall itself is so reverberant that I avoided using reverberation on this tape altogether. Likewise, the speaker configuration produced an exciting effect: no matter where I stood in the hall, I had the impression that the sounds on the test tapes were coming from various distances and directions, not limited to the two speakers directly above wherever I happened to be standing. (After the concert, one person asked if the tape hadn't been played over the quad system). This I attributed to an aural deception which arose because several sounds, each having been recorded with its own characteristics timbre, amplitude, and envelope, were impinging upon the ear simultaneously; combined with the phase differences which resulted because the same sets of sounds were coming from several different speakers, this "deceived" the "ear" into hearing the sounds coming from several different locations. So I paid very little attention to motion across the stereo field (except at the beginning and end of the tape), and simply distributed the various signals evenly across the stereo field in the final mix.

The recording was done in the "classical" studio of the Institut für Musik—und Kommunikationswissenschaft at the Technische Universitat Berlin (perhaps this would be the appropriate point to thank Prof. Fritz Winckel, Dr. Manfred Krause, and Volkmar Hain, Tonmeister in the studio, for making the recording sessions possible). Source tracks were recorded Dolbyized (Dolby-A) on a 4-track Telefunken M-10 (1" tape) and 3¼" stereo Telefunken M-5's, using the BASF LGR-30 tape for which those machines are equalized. These source tapes were mixed down on the studio's 18-8 Telefunken mixer, de-Dolbyized after the mix, and a master tape was recorded non-Dolbyized on a fourth stereo M-5. (I found that this "cheating" with the Dolby had no audible detrimental results when A/B-compared with a mixdown of identical, non-Dolbyized material; however, for some still unexplained reason, the Dolbys "breathed" during the recording of some of the original tracks). All recording was done at 15 ips = 38 cm/s. A master tape was produced in this manner in several sections, these partial masters being spliced together to form the final master; there are three such splices.

The original tape was recorded 2-8 April 1975 and first performed on the evening of the 8th. Subsequently I re-recorded the first partial master to form the current version. Copies of the master tape were recorded in the same studio using DNL.

As has been explained, this tape was conceived for a reverberant hall with many speakers, and thus will not sound its best when heard over a home stereo system or headphones. If quad is available, patch:

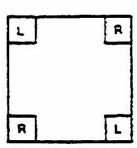

Attached are "Synthi Dopesheets" for each of the three instruments. Instrument 1 was used twice: once for the first partial master, and once for the last. Instrument 3 arose after it became apparent that 1) at least 2 different envelopes, one for timbre and one for amplitude, are needed to generate an interesting electronic sound of the sort I was looking for; 2) it was difficult to incorporate the envelope generator on the Synthi-AKS for either parameter into a convincing patch. Instrument 2 is a variant of Instrument 3.

Explanation of Dopesheet symbols:

x = change knob setting for each separate track

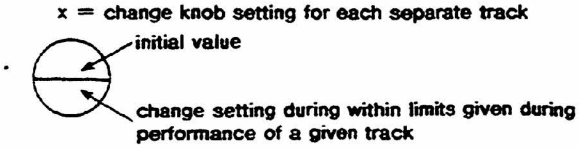

Note that on the Dopesheet, the knobs have been numbered 1-36, and are referred to in this text by number.

Instrument 1: (see figure 16.7). To tune: position Joystick in the lower right-hand corner (as indicated with a circle on the Dopesheet). Set 10 (Oscillator 3 Shape) at 10 or 0 (Oscillator 3 produces DC). Tune 1 and 5 so that Oscillator 1 produces a beat frequency against Oscillator 2 of 1 Hz or less. Return 10 to original setting; adjust 21, 35, and 36 for brightest and loudest sound. Set 9, 33, and Realtime Pitch Spread (on Keyboard) so that the top note of the Keyboard just barely drives Oscillator 3 into the audio range (ca. 20 Hz), and so that a suitable range of slower "trills" is available across the range of the Keyboard.

Performance (by "performance," I mean the manual changes during the recordings of a single track): play slow "glissandi" across the full range of the Keyboard while varying Joystick and other indicated settings. Eleven changes the "interval" of the "trill."

For each new track: change settings marked with "x," and retune.

Discussion (cf. attached flowchart): Oscillator 1 and Oscillator 2 beat slightly, producing a slight phasing effect which contributes a "live" edge to each individual track. The square wave from Oscillator 3 drives Oscillator 1 and Oscillator 2 in a trill-like pattern. Moving the Joystick changes timbre and amplitude; different notes on the Keyboard produce various "trill" speeds. Changing the Shape control of Oscillator 3 changes the relationship between the upper and lower portions of the square wave, and thus the temporal relationship between the higher and lower "notes" of the "trill." The output level of Oscillator 3 controls the frequencies of the upper and lower pitches, and thus the "interval" heard. The Shape control of Oscillator 2 can be changed during performance for further variation in timbre.

Instrument 3: Variant (see figure 16.8). For the sake of simplicity, the Variant to Instrument 3 will be presented before Instruments 2 and 3. Instrument 2 was used for the second partial master; Instrument 3 and its Variant were both used in the third.

To tune: with "Sequencer Length" set at 5, record 2, 3, or 4 pitches spaced by pauses, taking care that the Sequencer also records the trigger for the whole duration of the pitch, viz.:

Performance: as the recorded sequence plays over and over, change settings (slowly) as indicated.

For each new track: record different Sequencer notes, and change settings marked with "x."

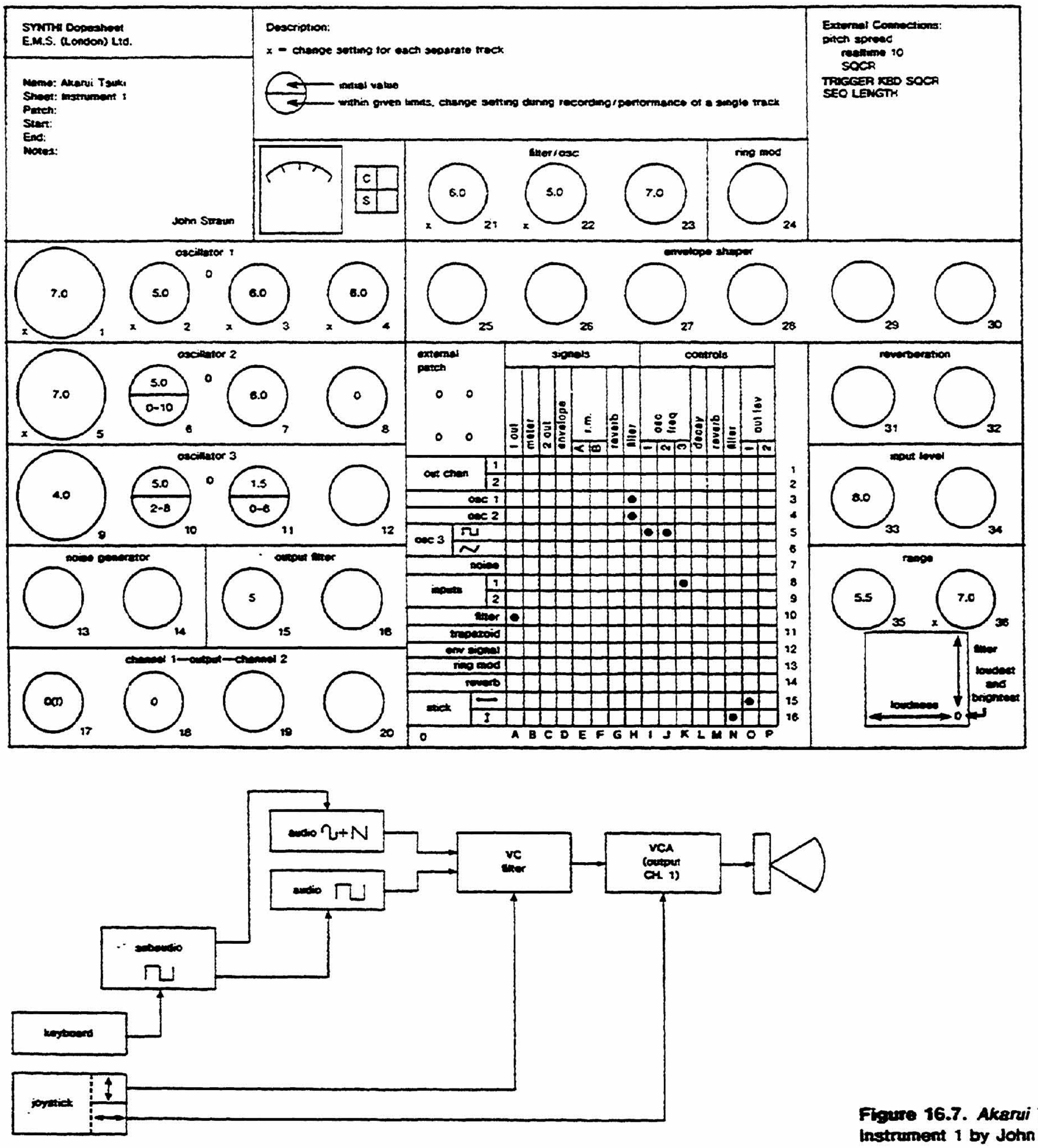

Figure 16.7. *Akarui Tsuki*—Instrument 1 by John Strawn

Discussion: (cf. flowchart): Oscillator 3, Oscillator 2, and the Filter form the framework of this instrument. Oscillator 2, initially producing a sub-audio frequency, is driven into the audio range when Oscillator 3 swings into the upper half of its square wave. At the same time, the triangle/sawtooth from Oscillator 3, in phase with the square wave from the same oscillator, opens and closes the filter. Changing the Shape control (for both the square and triangle) on Oscillator 3 effectively changes the attack and decay characteristics of the individual tones. The sequencer takes care of changes in pitch and rhythm; the envelope generator triggered by the sequencer in effect turns the whole instrument on and off.

The Variant to Instrument 3 is especially useful for sounds which at some tunings are reminiscent of brass instruments, but which can be modified in performance (change 6 and 10 slowly) into other sound qualities.

Instrument 3: (see figure 16.9). Tuning and Performance as above. For a given tuning of the patch, 2 or 3 notes on the Sequencer will usually be especially effective.

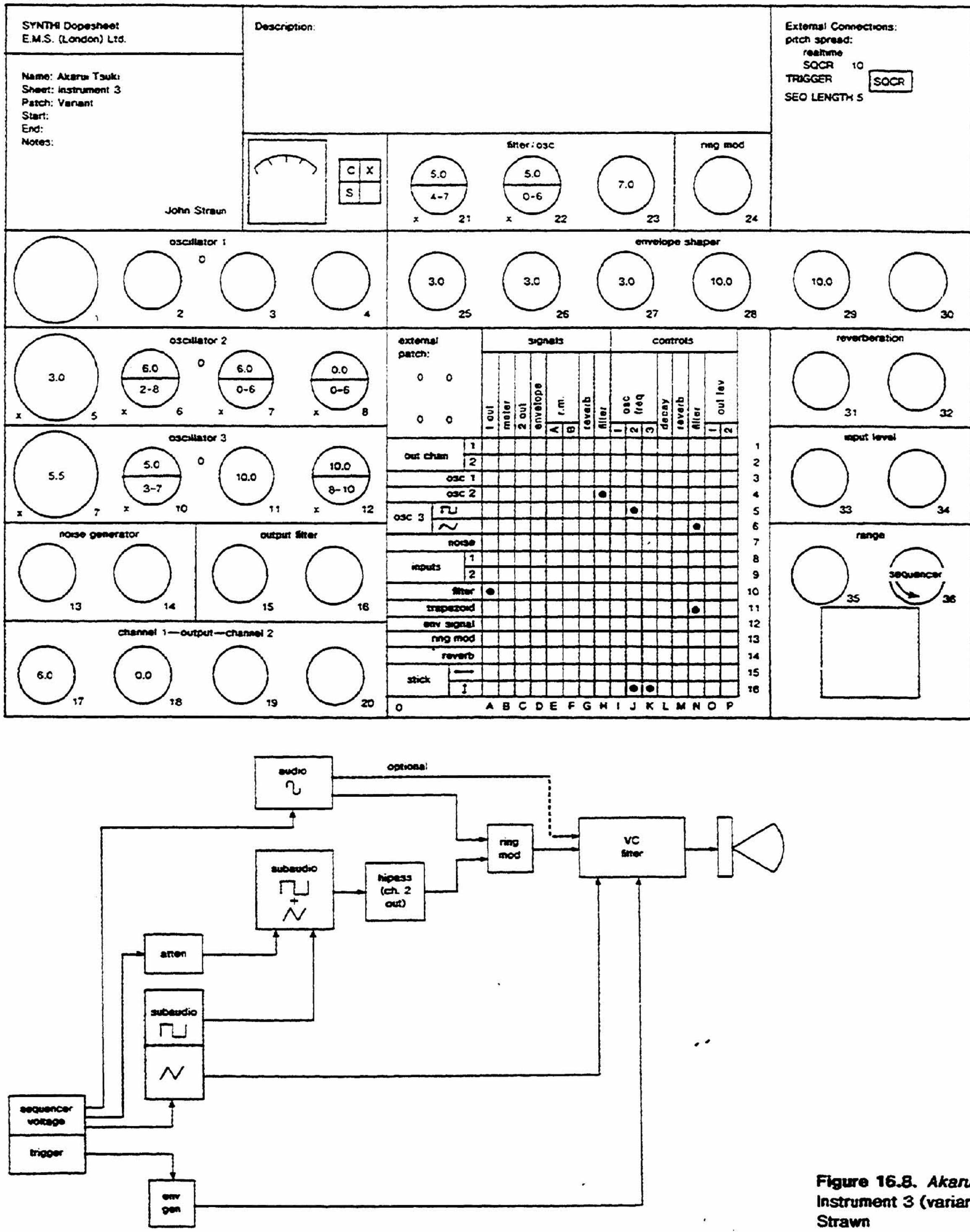

Figure 16.8. *Akarui Tsuki—* **Instrument 3 (variant) by John Strawn**

NB: the High-Pass Filter (knob No. 16, pins C4, F2) after Oscillator 2 is necessary to limit unwanted leakage when Oscillator 3 drives Oscillator 2 into the subaudio range.

Discussion: Here the signal from Oscillator 2, already discussed above, is ring modulated against the sine from Oscillator 1. Besides the obvious effect of producing more complicated audio spectra, ring modulation breaks the 1:1 relationship between the rhythm and pitch changes produced by the sequencer as seen above.

Instrument 2: (see figure 16.10). To tune: Touch and hold lowest note on Keyboard. Tune 9 for time between "strokes." The setting of 1 determines the pitch of the "sustained note." Tune Oscillator 1, Os-

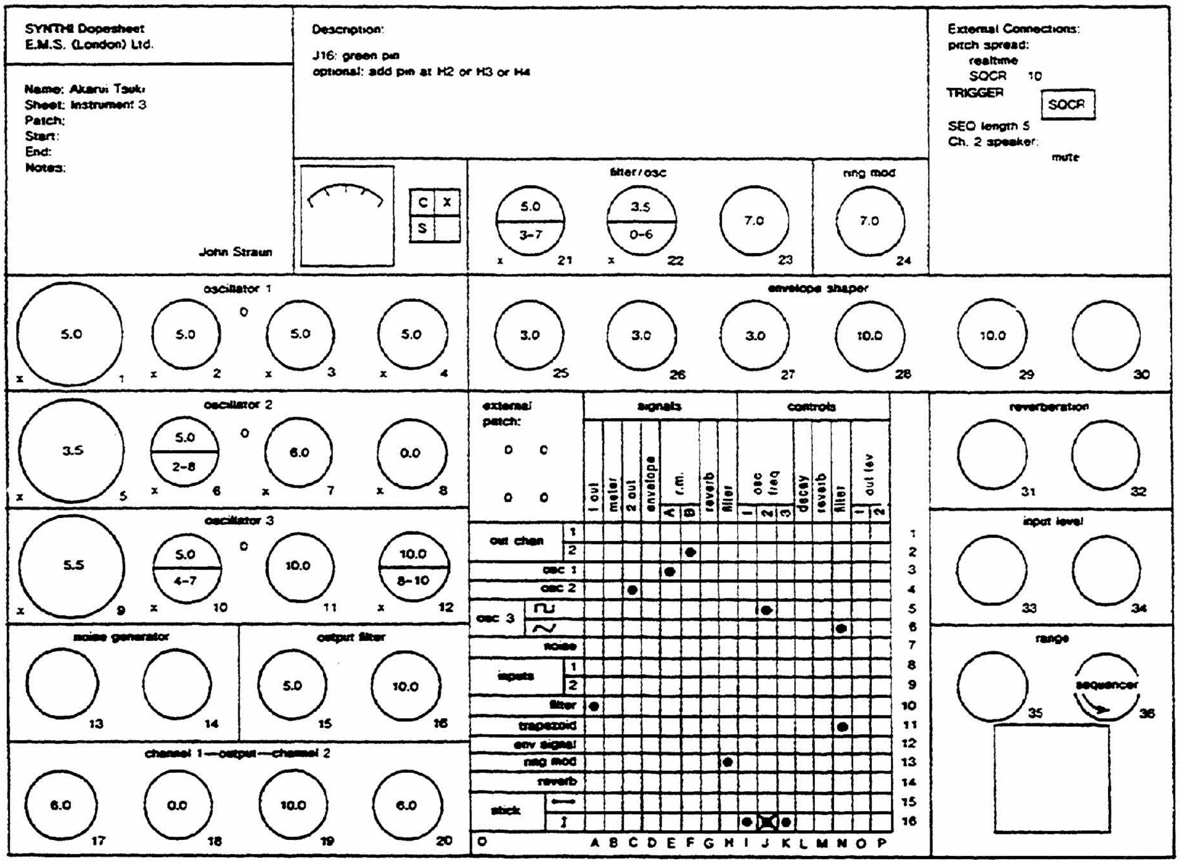

Figure 16.9 *Akarui Tsuki*—**Instrument 3 by John Strawn**

cillator 2, and Filter (including 12) = control voltage level from Oscillator 3) for desired timbre of "stroke."

Performance: hold open Envelope Shaper with manual trigger or Keyboard lowest note; with pin at B5 or B6, timing of "stroke" can be monitored visually. Change setting of 9 to vary rhythm of "stroke." Nine can also be varied after the "attack" to obtain an extremely long decay, for eaxmple.

For each new track: Change settings marked with an "x." For this recording, the frequency of Oscillator 1 was left unchanged.

Transition to Instrument 3 (used only on 1 track): add pin at K8; during performance, manually raise setting of 9 (Oscillator 3 frequency) to e.g. 6.0, then play (pre-determined) notes on Keyboard.

NB: J8 must be a green pin. The I8-J8 pair is necessary for the control voltage from J5 to leak through to Oscillator 1 slightly, and give the "lift" in "pitch" right at the beginning of the "stroke." Here is an example of a patch where one CV is needed at two different levels, and where the possibility of independently attenuating control voltages on the AKS would make for a cleaner patch.

Discussion: This is actually a variant of, and was developed from, Instrument 3; the same framework is used here, without sequencer. (The Envelope Generator/VCA combination is simply a convenient on/off switch for use in performance). However, the period of Oscillator 3 is quite slow (ca. 10 sec.), i.e., only one event occurs every 10 sec., and, depending on the tuning, the audible portion of each event lasts e.g., 6 seconds. In the first half of each event, the filter is slowly opened by the triangle from Oscillator 3, while the square wave of Oscillator 3 holds the square wave of Oscillator 2 in the subaudio range (e.g. ca. 1 Hz). However, the Ring Modulator of the Synthi-AKS reacts to changes in DC, so that each cycle of the square wave from Oscillator 2 produces two distinct beats; in other words, the sine from Oscillator 1 is gated through the Ring Modulator at each ½-cycle of Oscillator 2. (The purpose of the High-pass Filter in Instrument 3 is to suppress this pulse). A sustained tone of the same frequency as these beats is provided by also using the sine from Oscillator 1 as a direct input to the Filter. When Oscillator 3 swings into the upper half of its cycle, Oscillator 2 is driven into the audio range (cf. above, Instrument 3: Variant),

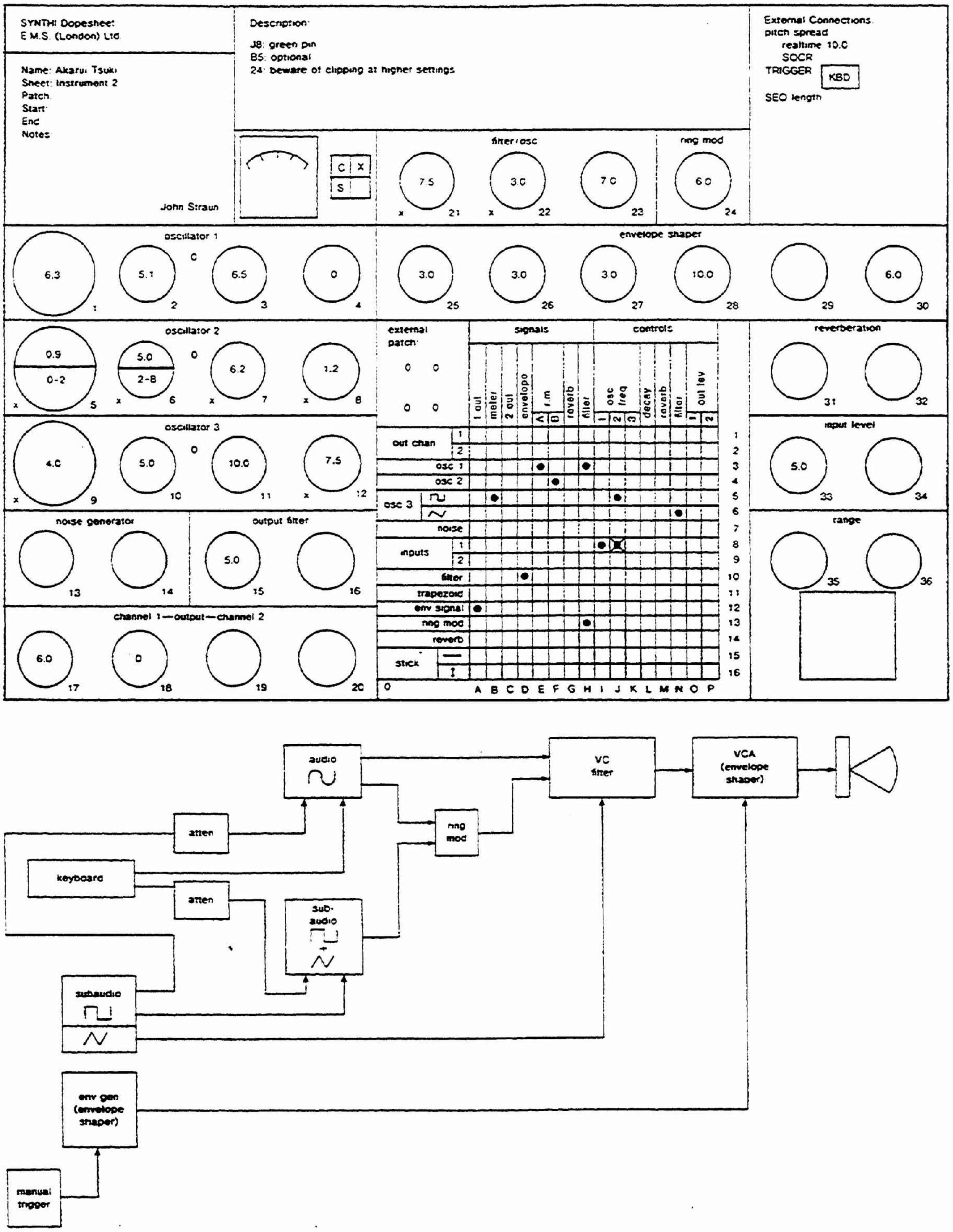

Figure 16.10. *Akarui Tsuki*—Instrument 2 by John Strawn

and the frequency of Oscillator 1 is "lifted" slightly. But the upper half of the square wave on the Synthi-AKS is by no means a straight line, and this non-linearity is magnified by the slow period and the high level setting. Thus, the frequencies of Oscillator 1 and Oscillator 2 sink slightly, just enough to change the spectrum of the Ring Modulator output while the Filter starts to close. This combination produces the quasi-bell timbres characteristic of Instrument 2. Once the filter has completely closed, the square wave from Oscillator 3 swings back to the lower half of its cycle, and the entire process repeats itself.

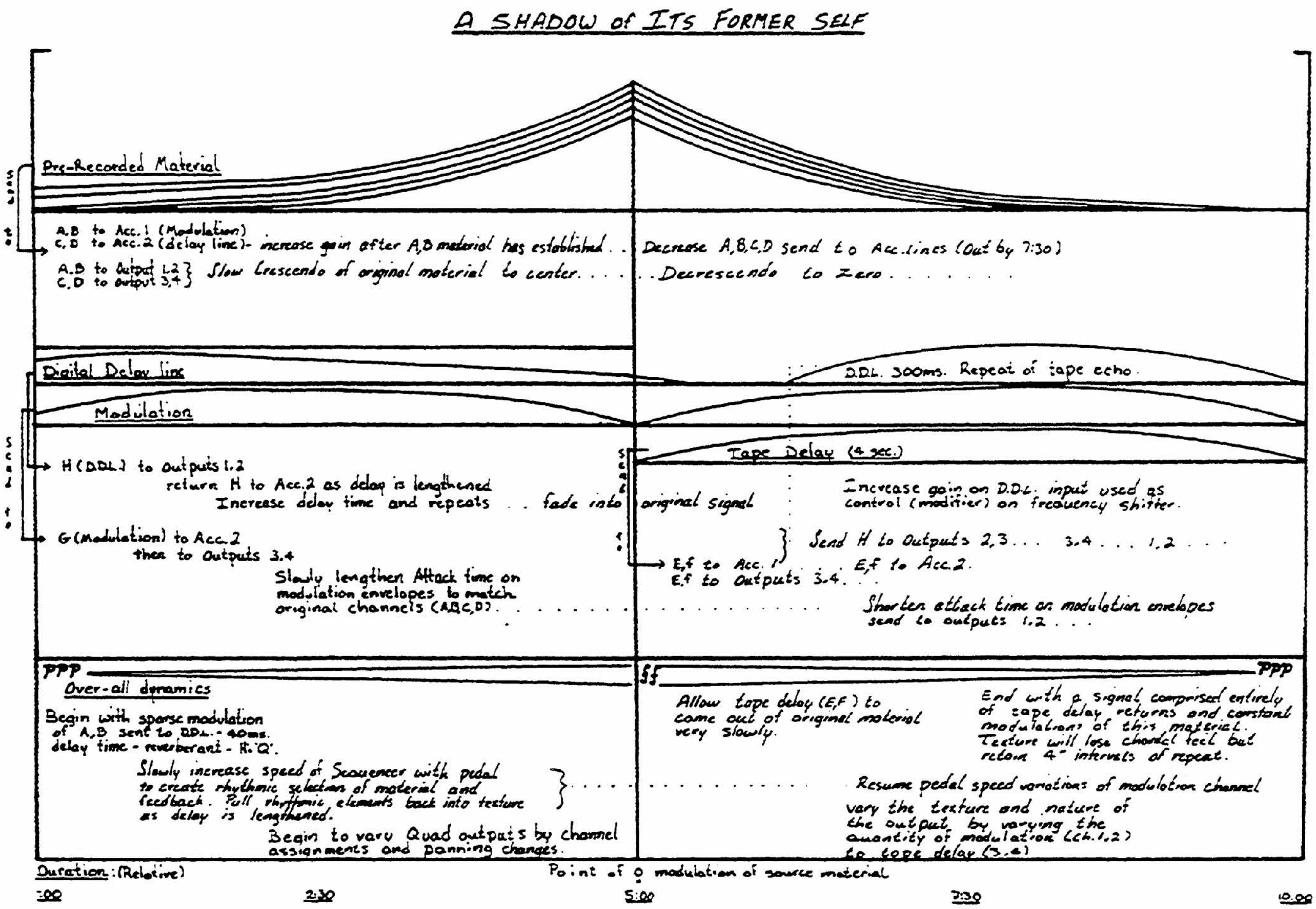

Instrumentation:

modular synthesizer equal to Moog System 55. Roland or Emu instruments with similar modules and equatable functions may be easily substituted.

- four-track tape recorder (only playback is required).
- two 2-track tape recorders with microphone inputs.
- two microphones (with stands and cables).
- extra recording tape
- one 8-input by 4-output mixing console with auxilliary effect send busses.
- one four-channel (quadraphonic) monitor/performance speaker system.
- one Moog frequency shifter (or voltage controlled equivalent).
- one digital delay device (Roland, Ibanez, Prime-time, or tape echo unit like Echoplex or Chorus-echo).
- two voltage pedals (0 to 9 volts).

ANY ONE OR ALL OF THE ABOVE SPECIFICATIONS CAN BE REDUCED IN NUMBER OR COMPLEXITY, WITH A NECESSARY CHANGE IN TEXTURAL MATERIALS.

PERFORMANCE AND STRUCTURAL INTENT

"a shadow of its former self" is designed to be a live improvisation for synthesist/mixer using prerecorded materials and modulators. Prerecorded materials are placed on four channels of a multitrack recorder, or on two stereo tapes, for later simultaneous playback. The synchronization of the two stereo pairs is not crucial. Prerecorded Material should be textural within a chordal framework.

PROCEDURES

Record Patch #1 onto two channels of a four track tape recorder. Use Notes #1 for tuning the 24 control voltages of the sequencer.

While the two final VCA's govern stereo placement, their associated control oscillator should be varied throughout the recording. Try to obtain an "arch" form, where the speed of stereo pan is greatest at the center of the tape.

Next, record Patch #1 onto the final two tracks of the four track recorder, allowing the completed four tracks to be asynchronous, with overall chordal separation. Notes #2 will be used for the sequential controller on this stereo pass.

For both "pre-recordings," set the envelope follower very, very carefully, so that it initially produces a trigger no more than once every 1 to 3 seconds.

IMPROVISATION IN PERFORMANCE

In performance, the mixer will use the prerecorded material, material recorded live from the audience microphones (delayed via record-playback diagram), and modulations of these elements to create a completed structure.

The mixer should strive to create constantly changing textures which begin in a complex form, move to one central moment of original material presentation, and back to a modulated form of the original material reproduced in canon. The last quarter of the improvisation should be based solely upon the delayed tape and its modulations. Each modified return of the material will be further removed from the original texture through frequency shifting and constantly changing control voltages.

The following score is an output designation. A detailed performance score can be obtained if desired, by writing to the composer through the Electronic Music Studio, California State University, San Jose California, 95192.

Figure 16.11. Specifications for *A Shadow of Its Former Self* by Dan Wyman

PATCH #3 OUTPUT MIXING SYSTEM

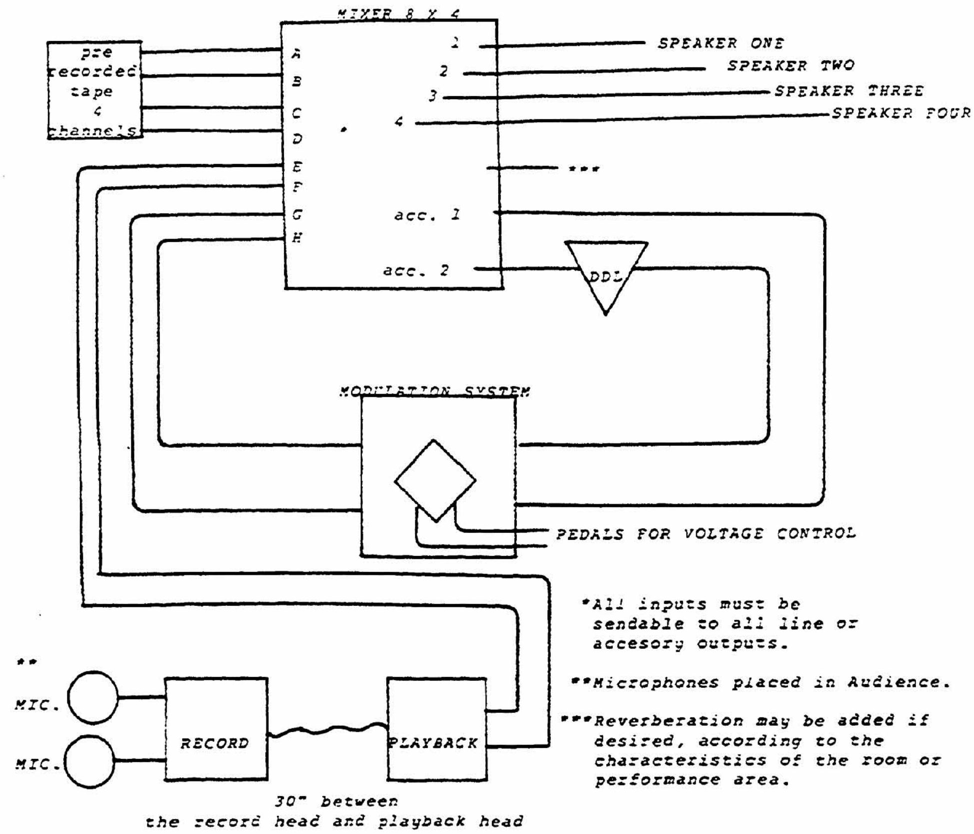

PATCH #1

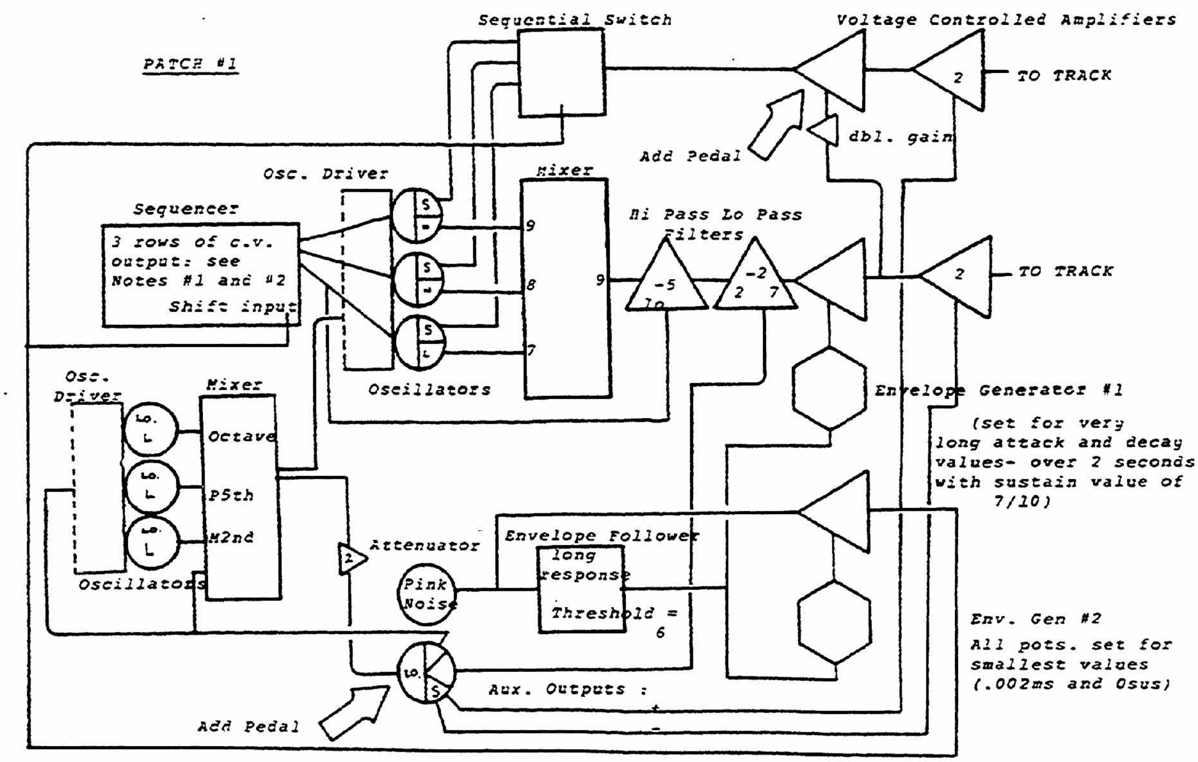

PATCH #2 (MODULATION SYSTEM)

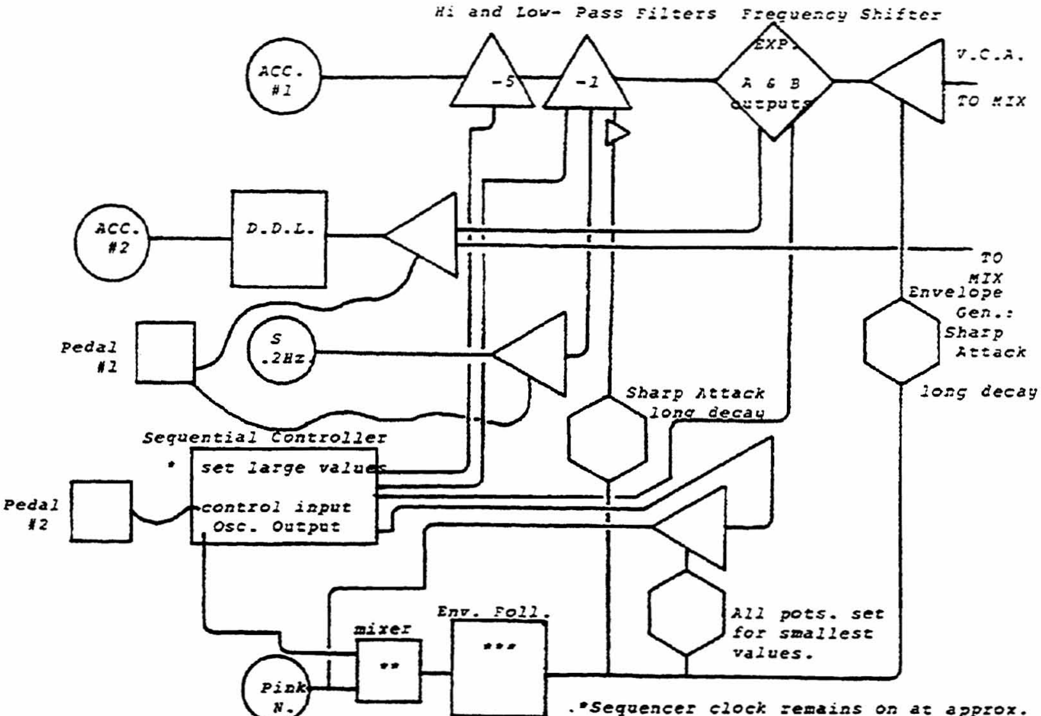

.*Sequencer clock remains on at approx. lowest frequency. Pedal voltage increases speed to ca. =180.
**Adjust mixer to provide for balance between Noise Source and Sequencer clock output.
***Envelope Follower responds to Noise Source until Sequencer clock overrides it.

CHANGE VALUES OF ENVELOPE GENERATORS AND FREQUENCY SHIFTER THROUGHOUT PERFORMANCE.

NOTES ON DIAGRAMS

1. All V.C.A.'s are to be set on Linear Mode.
2. Signals proceed right from Source.
3. Controls or inputs TO a module enter from left or bottom.

NOTES #1 NOTES #2
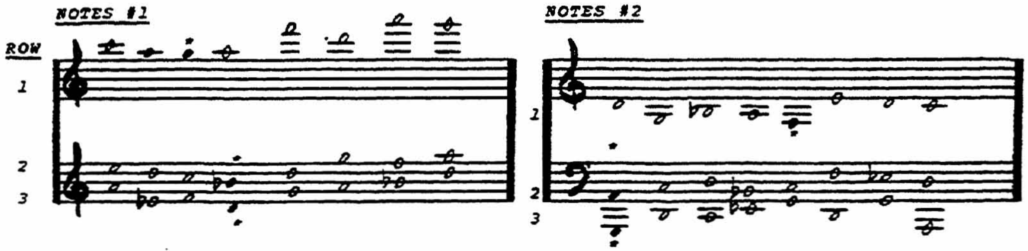
* = zero or nominal voltage setting on sequencer. Set all pots in row to "0" and tune associated oscillator to darkened note. All other notes are set above.

Figure 16.11—*Continued*

Afterword

Commercial electronic instruments are often criticized because they "sound like themselves." A musician may form a certain attitude about a system and comment that whatever event is executed, it still sounds like an XXX system. It is true that due to differences in design, each system or instrument has its own characteristics. Even entire studios have their own characteristics, and these can be audibly identified if one is familiar with the literature. But this is absolutely no different than the concert pianist who can recognize the sound of and has a preference for a certain make of piano. Some of the characteristics of electronic instruments have almost become commercial cliche's, and this is where the danger lies. A truly resourceful musician will learn to work around the obvious patch configurations and make the instrument work for him and not necessarily for itself. Once the theoretical operation of a system is understood, the composer must go beyond its usual sounds and make the modules produce events exactly as conceived. An analogy lies in the use of the Western tonal system. In this system a dominant chord has a tendency to be followed by a tonic chord, but a deceptive cadence at the right moment can be very refreshing. The craft of a composer working in the tonal medium is usually measured by how he makes the notes do what he wishes and not by how he bends his artistic endeavors to fit the natural tendencies of the tonal system. In like manner, the composer working with electronically produced and controlled sound must not stop with the "instruction book," but go on to extend the various module functions and manners of control. Consequently, a basic knowledge of the various module functions is only a point of departure. A thorough knowledge of the medium requires the composer to have enough understanding of electronic theory to allow him to take part in the design, construction, and modification of equipment. This understanding will also serve as an excellent guide to finding new methods of application.

Although this book has purposely tried to avoid aesthetic implications, perhaps a word about experimentation may be appropriate. No matter how experienced a composer is with the equipment in a studio, many events and sequences may still require hours of work and experimentation to realize. A single momentary sound may be the result of three or four hours of re-patching and re-recording. When the final tape is produced, the composer will naturally have a tendency to be more attentive to those events which were the most time-consuming to create. He must not confuse this with aesthetic content, however. The perceiver cannot hear the amount of time and planning spent on the production of an event. As listeners we don't judge the aesthetic content of a composition by the time spent on its creation, but rather by its sonic information.

The preface to this book contained the statement that an art so closely related to technology as electronic music is in part dependent on the development of that technology. This statement should be accompanied by a final word of advice to the composer just embarking on the field of electronic music. Beware the temptations of super-utilization. The fact that a studio or system makes available a multitude of signal sources and processing devices does not mean that each and every module must be utilized in the creation of a single composition. A duet can convey just as much aesthetic information as an ensemble of symphonic proportions. The art is not in the assemblage of sources and control, but is rather a result of their application.

Annotated Bibliography

This bibliography was compiled in consideration of three factors: *practical knowledge*—all listings supply information which is applicable to practical situations; *comprehension*—the more technical listings are so organized that they may be used by persons with minimal experience in physics and electronics; *cost*—most of the listings are available at a moderate cost. Although the technical publications are often more expensive, such listings are considered very useful, if not essential, as basic reference material.

Due to the bibliographic material available in many of the other writings on electronic music, this listing is not concerned with individual articles appearing in various periodicals. Certain periodical publication titles are, however, listed in the appropriate sections.

This bibliography is by no means comprehensive, and the omission of any publication is not an implication of negligible value or lack of applicability. The listings are a result of practical usage by the author and his colleagues in the field of electronic music.

History, Development and Aesthetics

In this section are listed reference books with substantial information on electronic music history, books dealing with fields related to electronic music, sources of scores, general references, and books of historical significance.

APPLETON, JON and PERERA, RON, eds. *The Development and Practice of Electronic Music*. New Jersey: Prentice-Hall, 1975.

A series of excellent writings about many aspects of electronic music including its origin, the tape studio, voltage control techniques and an outstanding overview of live electronic music by Gordon Mumma. Highly recommended.

ASHLEY, ROBERT. *Music with Roots in Aether*. New York: Performing Artservices, Inc., 463 West Street, 10014.

Highly acclaimed video tape series with interviews and performances by Robert Ashley, David Behrman, Philip Glass, Alvin Lucier, Gordon Mumma, Pauline Oliveros and Terry Riley. Available on rental. Highly recommended.

AUSTIN, WILLIAM. *Music In the 20th Century*. New York: W. W. Norton, 1966.

A general reference of contemporary music with a chronology of the history of electronic music beginning with the work of Thadius Cahill (1897) to 1963 and a chronology of pitch systems related to and used in various aspects of electronic music.

BEAUCHAMP, J. W., and VON FOERSTER, eds. *Music By Computers*. New York: John Wiley and Sons, Inc., 1969.

A collection of previously published articles on computer-generated and controlled sound.

BEAVER, PAUL, and KRAUSE, BERNARD. *The Nonesuch Guide to Electronic Music*. New York: Nonesuch Records HC 73018, 1968.

Booklet and recordings describing basic studio equipment, waveforms, voltage control, modulation, filtering, and notational concepts. An excellent nontechnical approach to standard system techniques with recorded examples.

BECK, A. H. W. *Words and Waves*. New York: McGraw-Hill World Universal Library, 1967.

An introduction to the history and concepts of electronic communication. This book also covers telegraphy, radio, telephony, and serves as a good introduction to communications theory.

BECKWITH, JOHN, and KASEMETS, UDO. *The Modern Composer and His World*. Toronto: University of Toronto Press, 1961.

Discussions with Varese, Ussachevsky, and others on various aspects of electronic music. Also serves as an excellent general reading on new music.

BMI: The Many Worlds of Music. New York: BMI Public Relations Department, 589 Fifth Ave., 10017, Summer Issue, 1970.

This special issue is devoted entirely to electronic music. It contains articles and an excellent discography of electronic music recordings.

BORNOFF, JACK, ed. *Music Theatre in a Changing Society*. New York: UNESCO, 1968.

A series of writings surveying the influence of technology and technical media on theatre, film, television, and music. Highly recommended.

CAGE, JOHN. *A Catalogue of Works*. New York: Henmar Press, Inc., 1962.

An annotated listing of all of Cage's work (electronic, theatre pieces, etc.) up to 1962. This catalogue also contains an excellent interview with Cage by Roger Reynolds.

Contemporary Keyboard. Cupertino, Ca.: GPI Publications, 20605 Lazaneo Dr.

Obviously for the keyboardist but columns on synthesis, occasional interviews and equipment reviews.

COPE, DAVID. *New Directions in Music—1950 to 1970*. 3rd edition. Dubuque, Iowa: Wm. C. Brown Company Publishers, 1981.

A survey of avant-garde music trends with chapters on electronic and technically oriented music. This book is very valuable as a reference to individual compositions and contains a very good chapter-by-chapter bibliography.

——. *New Music Composition*. New York: Schirmer Books, 1977.

A general text on contemporary composition but contains five chapters on electronic music and organizational techniques. Strongly recommended.

CROSS, LOWELL. *A Bibliography of Electronic Music*. Toronto Press, 1966.

An excellent bibliography of articles, periodicals, books, and special publications on all aspects of electronic music. Listening contains publications in all languages and is current up to 1966. Highly recommended.

DAVIES, HUGH, ed. *International Electronic Music Catalogue*. Cambridge, Mass.: M.I.T. Press, 1967.

Originally published as a double issue of *Electronic Music Review* this catalogue lists and annotates almost every piece of electronic music produced prior to 1967, including names and addresses of composers and studios. Highly recommended.

Die Reihe. Vienna, Universal Editions: English translations published by Theodore Presser Company, Bryn Mawr.

Seven of the eight issues have been translated and contain writings on and by composers active in the avant-garde. Issue No. 5 (1961) is primarily concerned with electronic music.

EIMERT, HERBERT. *Electronic Music*. Ottawa: National Research Council of Canada, Technical Translation TT-601, 1956.

ERNST, DAVID. *The Evolution of Electronic Music*. New York: Schirmer Books, 1977.

An excellent "literature" oriented overview of the history of electronic music.

Gravesano Blatter/Gravesano Review. Switzerland.

Published semi-periodically since 1956, the *Gravesano Review* contains articles by composers and physicists on electronic music, acoustics, timbre, and equipment. This journal serves as an historical documentation of early work in electronic music. Highly recommended.

HILLER, LEJAREN. *Music Composed with a Computer: An Historical Survey*. Illinois Technical Report No. 18. School of Music, University of Illinois, 1969.

HILLER, L. A., and ISAACSON, L. M. *Experimental Music-Composition with an Electronic Computer*. New York: McGraw-Hill, Inc., 1959.

An historically important book touching on the aesthetic and technical concepts of computer and mathematically-oriented music. The book contains a description of the processes involved with the composition of the *Illiac Suite* for string quartet (since then recorded on Heliodor Records No. H/HS 25053).

HENRY, OTTO. *A Preliminary Checklist: Books and Articles on Electronic Music*. New Orleans, La.: 2114 Milan, 70115, 1966.

KIRBY, E. T., ed. *Total Theatre—A Critical Anthology*. New York: E. P. Dutton and Company, Inc., 1969.

A collection of writings concerned with avant-garde theatre. Some writings deal with new musical and environmental concepts which are of interest to the composer.

KIRBY, MICHAEL. *The Art of Time—Essays On the Avant-Garde*. New York: E. P. Dutton and Company, 1969.

A collection of Kirby's writings dealing with environmental and kinetic theatre. This book will be of great interest to the open-minded composer.

KOSTELANETZ, RICHARD, ed. *John Cage*. New York: Praeger Publishers, 1970.

A collection of writings by and about Cage and his activities. It contains several excellent articles on his involvement with electronic music and technology. Highly recommended.

——. *Theatre of Mixed Means*. New York: Dial Press, 1968.

Interviews with artists and musicians active in the avant-garde. Of special interest to the composer are interviews with John Cage and LaMonte Young.

KRAUSE, BERNARD. *The New Nonesuch Guide to Electronic Music*. New York: Nonesuch Recrds, NB-78007, 1980.

A new edition of the original Beaver and Krause recording with newer applications and techniques.

LANG, PAUL H., and BRODER, N., eds. *Contemporary Music in Europe*. New York: G. Schirmer, 1965.

A collection of essays written for the Fifth Anniversary of *Music Quarterly*. Each article deals with the new music of a particular European country.

LEFKOFF, GERALD, ed. *Computer Applications in Music*. Morgantown, W. Va.: West Virginia University Press, 1967.

Papers from the West Virginia University Conference on Computer Applications in Music covering such subjects as analysis, bibliography, programming, and information processing.

LORENTZEN, BENGT. *An Introduction to Electronic Music*. Rockville Center, N. Y.: Belwin Mills Company, 1970.

Text, notation and recorded examples concerned with existing electronic music literature with brief aesthetic and methodological discussions geared at the secondary grade levels.

MACHLIS, JOSEPH. *Introduction to Contemporary Music*. New York: W. W. Norton and Company, 1961.

Contains a brief introduction to electronic music with biographical material on Stockhausen, Berio, Boulez, Maderna, Nono and Badings with very little material on American composers involved with electronic music.

The Music Educator's Journal. Washington, D. C.: NEA Publication Sales, 1201 Sixteenth St., N. W., November 1968.

This reprint of the special electronic music issue offering the educator's view of the state of the art is a bit slanted toward a single "school" but is still valuable reading and reference material.

ORAM, DAPHNE. *An Individual Note of Music, Sound and Electronics*. New York: Galaxy Music Corp. (Galliard Paperbacks), 1972.

This is one of the most bizaar books on the market! An overview of electronic music technique and technology written from a very personal viewpoint. Delightful reading.

PARTCH, HARRY. *Genesis of a Music*, 2nd edition. New York: Da Capo Press, 1974.

This book has absolutely nothing to do with electronic music as such but is strongly recommended. The Author's Preface is worth the price of the book. Contains a wealth of information on tuning systems and creative attitudes.

Perspectives of New Music. Princeton, N. J.: Princeton University Press.

Bi-annual publication of articles by American and European composers, theorists, performers, and critics concerned with issues in contemporary music.

RISSET, J. C. *An Introductory Catalog of Computer Synthesized Sounds*. Murray Hill, N. J.: Bell Telephone Laboratories, 1970.

ROBSON, ERNEST. *Phonetic Music* (with electronic music by Larry Wendt). Parker Ford, Penn.: 1981.

An interesting thesis on one approach to text sound composition and the use of the voice in sound poetry.

ROSENBOOM, DAVID, ed. *Bio-Feedback and the Arts*. Canada, A.R.C. Publications, P.O. Box 3044, Vancouver, 1976.

Early (mid-70's) writings on bio-feedback applications to the arts. A significant documentation of artistic approaches.

RUSSCOL, HERBERT. *The Liberation of Sound.* New Jersey: Prentice-Hall, 1972.

This bears the sub-title, "An Introduction to Electronic Music" but is actually a layman's history of experimental music up to 1960.

SALZMAN, ERIC. *Twentieth Century Music—An Introduction.* New York: Prentice-Hall, 1967.

An authoritative survey of contemporary musical life with excellent considerations of avant-garde activities and activities of American composers. Very well illustrated and documented.

SCHRADER, BARRY. *Introduction to Electro-Acoustic Music.* New Jersey: Prentice-Hall, 1982.

Chapters on basic tape manipulation. Classic and live electronic music and interesting interviews with composers. Highly recommended.

SCHWARTZ, ELLIOT. *Electronic Music: A Listener's Guide.* New York: Praeger Publishers, 1972.

An excellent book on the general why and who of electronic music. Contains notes and comments by various composers.

SCHWARTZ, ELLIOT, and CHILDS, BARNEY, eds. *Contemporary Composers On Contemporary Music.* New York: Holt, Rinehart and Winston, 1967.

A collection of writings by many major twentieth-century composers (mostly American) dealing with many aspects of music. Of special interest are articles by Varese, Ussachevsky, Brant, and Reich.

Source Magazine—Music of the Avant-Garde. Sacramento, Calif., 1201 22nd St.

A bi-annual publication of avant-garde scores (electronic, theatre, environmental) and writings by active composers. Issue No. 3, January 1968, is devoted to live electronic music. The series is now out-of-print but well worth hunting for in the library.

STUCKENSCHMIDT, H. H. *Twentieth Century Music.* New York: McGraw-Hill, World Universal Library, trans. Richard Deveson, 1969.

A very unique survey of musical trends in the twentieth century with chapters on "Technical Sound Material" and "Mathematics—For and Against." Highly recommended.

Synapse. Los Angeles: Synapse Publishing Co., 2829 Hyans St., 90026.

Articles, interviews and instrument and literature reviews dealing with a wide range of electronic music applications. Recommended.

TJEPKEMA, SANRA L. *A Bibliography of Computer Music.* Iowa: University of Iowa Press, 1981.

An extensive annotated bibliography of writings dealing with digital applications of sound synthesis and analysis. Recommended.

VINTON, JOHN, ed. *Dictionary of Contemporary Music.* New York: E. P. Dutton & Co., 1974.

Dictionary of terms, techniques and composers in the field of contemporary music. Contains many of the general terms of electronic music. Expensive but worth having in a music library.

ZIMMERMANN, WALTER, ed. *Desert Plants.* Canada: A.R.C. Publications, P.O. Box 3044, Vancouver, 1976.

A delightful series of interviews with American composers, some of who are very active in electronic music. Highly recommended.

Electronic Theory, Schematics, and Circuits

This listing is concerned with general electronic theory for layman, individual component theory, and sources of circuits, all of which the composer will find useful. Most books listed are directed toward the reader with minimal experience in the field of electronics.

ANDERTON, CRAIG. *Elctronic Projects for Musicians.* Saratoga, Ca.: Guitar Player Productions, P. O. Box 615, 95070.

Layman's introduction to electronic music circuitry with projects for simple construction projects.

Audio. Philadelphia, Pa.: 134 North 13th St. 19107.

A monthly publication of equipment reviews, general audio, and feature articles on various aspects of audio circuit design and applications.

BROWN, ROBERT and MARK OLSEN. *Experimenting with Electronic Music.* Blue Ridge, Pa.: Tab Books, 1974.

A very basic book on circuit design dealing with electronic music modules.

BROWN, RONALD. *Lasers.* New York: Doubleday Science Series, Doubleday and Company, Inc., 1968.

Due to the implementation of the laser in many aspects of contemporary art and mixed theatre, the author feels that a general reference in this area will be of value. This book will provide the reader with a basic understanding of coherent light, types of lasers, laser communication, holograph techniques, and other applications.

BUBAN and SCHMITT. *Understanding Electricity and Electronics.* New York: McGraw-Hill, 1969.

An introductory course in electrical and electronic theory with basic information about tools, materials and processes.

Circuit Design for Audio. Plainview, N.Y.: Sagamore Publishing Company, Inc., 1967.

Produced by Texas Instruments, this reference discusses audio design emphasizing practical time- and cost-saving procedures.

CROWHURST, NORMAN H. *Electronic Music Instruments.* Blue Ridge Summit, Pa.: TAB Books, 1971.

An excellent coverage of the subject from simple amplification to total electronic music considerations. This book deals with traditional amplified instruments to modern synthesizers. Also contains a handy section on troubleshooting.

Electronic Circuit Design Handbook. Blue Ridge Summit, Pa.: TAB Books, 1970.

Compiled by the editors of EEE Magazine, this is a collection of over 600 circuits dealing with amplification, filtering, oscillation, etc.

Field Effect Transistor Projects. Phoenix, Ariz.: Motorola Semiconductor Products, Inc., 1966.

An introduction to FET Theory, construction techniques, and simple, but useful, circuits.

FISKE, KENNETH A., and HARTER, J. H. *Direct Circuit Analysis Through Experimentation.* Seal Beach, Calif.: The Technical Education Press, 1968.

Step-by-step exploration of DC circuit principles and equipment usage. Contains excellent sections on soldering and use of an electronic parts catalogue. Very practically organized.

FONTAINE, GUY. *Transistors For Audiofrequency (Audiofrequency Amplification).* New York: Hayden Book Company, 1967.

Detailed guide of the application of transistors in audio amplifiers illustrating how transistor characteristics are related to the principles of design.

Geffe, Philip R. *Simplified Modern Filter Design*. New York: Hayden Book Company, 1963.

Basic principles of filter design with extensive tables of numerical data. Also contains chapters on attenuation, equalization, and measurement techniques.

Gottlieb, Irving. *Basic Oscillators*. New York: Hayden Book Company, 1963.

A descriptive analysis and definitions of oscillators, components, characteristics and the theory of oscillation. Highly recommended.

——. *Frequency Changers*. New York: Howard W. Sams, 1965.

General principles of frequency multipliers, translators, modulators and dividers. An excellent source of practical schematics.

——. *Understanding Amplitude Modulation*. New York: Howard W. Sams, 1965.

Principles of amplitude modulation and descriptions of various AM systems. Although intended for the radio broadcaster, it may be used by the electronic musician as a basic reference.

Graf, Rudolf. *Modern Dictionary of Electronics*. New York: Howard W. Sams, 1968.

Approximately 16,000 terms clearly defined for the layman. In the opinion of the author, this is the best dictionary of electronics for the layman. It also covers the areas of communications, micro-electronics, computers, and fiberoptics. Highly recommended.

Heath Digital Instrumentation. Benton Harbor, Mich.: Heath Company.

Description and application notes of specific Heath equipment, but the information is very general and introduces many concepts of digital control which may be applied to a variety of situations.

Herrington, Donald E. *How To Read Schematic Diagrams*. New York: Howard W. Sams, 1970.

A good reference covering schematics, block diagrams, chassis layout, component symbols, and wiring.

Hoberman, Stu. *Understanding and Using Unijunction Transistors*. New York: Howard W. Sams, 1969.

Basic UJT circuits in regards to oscillators, amplifiers, and power supplies. This book is also an excellent source of various oscillator circuits. Highly recommended.

Integrated Circuit Projects From Motorola. Phoenix, Ariz.: Motorola Semiconductor Products, Inc., 1966.

An introduction to IC theory with several interesting and practical audio circuits.

Lohberg, Rolf, and Lutz, Theo. *Electronic Brains*. New York: Bantam Books, 1968.

One of the most interesting and comprehendible books available on the basics of computer science, digital control, programming, logic systems, memory systems, and cybernetics. Highly recommended.

Malmstadt, H. V., and Enke, C. G. *Digital Electronics For Scientists*. New York: W. A. Benjamin, Inc., 1969.

A systematic introduction to digital systems, circuits, and components written for the person with no background in electronics. Highly recommended.

Markus, John. *Source Book Of Electronic Circuits*. New York: McGraw-Hill, 1968.

A collection of over 3,000 various circuits originally published in *Electronics* and *EEE*. A very valuable source and reference book.

Mileaf, Harry. *Electronics One-Seven*. New York: Hayden Book Company, 1967.

A series of seven volumes, available individually or bound as a set, each dealing with different area of of practical electronic theory: (1) Electronic Signals and Modification; (2) Basic Stages of Transmission; (3) Electronic Tubes; (4) Semi-conductors; (5) Power Supplies and Amplifiers; (6) Oscillators, Modulators and Mixers; (7) Auxilliary Circuits—Gates, Delays, Limiters, etc. Highly recommended.

Reference Data for Radio Engineers—5th Edition. New York: Howard W. Sams.

This book serves as a basic reference, in one volume, to all fields of audio, including tables, formulas, standards, circuit information, recording, technology, and associated areas. Highly recommended.

Shields, John Potter. *Practical Power Supply Circuits*. New York: Howard W. Sams, 1967.

Basic power supply circuits, solid state voltage regulation, batteries and SCR operation. A very handy book for those planning construction of a home system.

Solar Cell and Photocell Handbook. El Segundo, Calif., International Rectifier Corp., 1960.

Basic concepts of photocell control, performance specifications of various types of photocells, plus many interesting, useful, and simple circuits.

Solid State Projects From Motorola. Phoenix, Ariz.: Motorola Semiconductor Products, Inc., 1964.

Fundamentals of semiconductor operation. Construction hints and several useful and easy-to-construct circuits such as oscillators, amplifiers, and mixers.

SyntheSource. Curtis Electromusic Specialties. 110 Highland Ave., Los Gatos, Calif., 95030.

A technical periodical dealing with design and chip applications specific to synthesizers. Essential to those involved with instrument design.

Tremaine, Howard M. *Passive Audio Network Design*. New York: Howard W. Sams, 1964.

An excellent source of attenuator, equalizer, and filter circuits including sections of circuit design, theory, and applications. Highly recommended.

——. *Audio Cyclopedia—2nd Edition*. New York: Howard W. Sams, 1969.

This book is written in a question-answer format covering every phase of audio engineering. All information is presented in a very practical manner in terms the layman can understand and apply. Highly recommended.

——. *Passive Audio Network Design*. New York: Howard W. Sams, 1964.

A comprehensive guide to the design, construction, and testing of all types of attenuators, equalizers, and and filters requiring only minimal mathematical background. Highly recommended.

Turner, Rufus P. *ABC's Of Varactors*. New York: Howard W. Sams, 1966.

Basic varactor (specialized semiconductor) theory with very useful modulator and amplifier circuits with interesting supplementary applications.

Upton, Monroe. *Inside Electronics*. New York: New American Library, A Signet Science Library Book, 1964.

Basics of electronic theory and a well-written explanation of electronic components, amplifiers, speaker operation, and stereophony.

Ward, Brice. *Electronic Music Guidebook*. Blue Ridge Summit, Pa.: Tap Books. 1975.

A circuit guide for module design.

Recording and Tape Techniques

These are references dealing with tape recorders, tape care and editing techniques, recording science, and commercial studio techniques.

BURSTEIN, HERMAN, and POLLACK, H. C. *Elements of Tape Recorder Circuits*. Blue Ridge Summit, Pa.: TAB Books, 1957.

Covers frequency response, head and tape characteristics, and equalization. This book is a bit dated but still serves as a good introduction to the understanding of recorder operation.

BURSTEIN, HERMAN. *Getting The Most Out Of Your Tape Recorder*. New York: Hayden Book Company, 1960.

This book discusses types of machines, availability, pros and cons of each type and features that promote usefulness. Also discusses types of tape, microphones, and accessories.

DOLAN, ROBERT EMMETT. *Music in Modern Media*. New York: G. Schirmer, Inc., 1967.

An introduction to recording setups, control-room operations, recording, considerations in preparing and producing sound tracks, and a brief introduction to electronic music.

HAYNES, N. M. *Tape Editing and Splicing*. Flushing, N. Y.: Robin Industries, 1957.

This booklet is taken from Haynes' book, *Elements of Magnetic Tape Recording*. Englewood Cliffs, N. J.: Prentice-Hall, 1957. It serves as a basic explanation of splicing techniques, types of splices, editing procedures. This is a very practical guide for the novice editor.

JORGENSEN, FINN. *Handbook of Magnetic Recording*. Blue Ridge Summit, Pa.: TAB Books, 1970.

Covers all current tape recorder applications from audio to weather surveillance data recording. Contains basic design criteria on heads, the electronics and transports design. Highly recommended.

Modern Recording. New York: Recording Institute Publishing Co., Inc., 15 Columbus Circle, 10023.

MODUGNO, ANNE, and PALMER, CHARLES. *Tape Control in Electronic Music*. Talcottville, Conn.: Electronic Music Laboratories, P. O. Box H, 1970.

An introduction to recording techniques of special value to those involved in electronic music. A very valuable guide for elementary and secondary school programs.

NISBETT, ALEC. *The Technique of the Sound Studio*. New York: Hastings House Publishers, 1971 ed.

A handbook for microphone techniques, sound quality, editing, mixing, sound effects, echo and distortion techniques, and sound shaping. Highly recommended.

Recording Engineer/Producer. Hollywood, Calif., P.O. Box 2287, 90028.

A monthly publication of articles relating to recording science and techniques. Also articles on useful circuits and discussions of new equipment.

RUNSTEIN, ROBERT. *Modern Recording Techniques*. Indiana: Howard W. Sams & Co., Inc., 1974.

An excellent personably written book on all the aspects of the art of recording. Strongly recommended.

TUTHILL, C. A. *How To Service Tape Recorders*. New York: Hayden Book Company, 1966.

A detailed analysis of the operation of the mechanical and electronic systems of large number of tape recorders giving directions for maintenance and troubleshooting.

WESTCOTT, CHARLES G., and DUBBE, RICHARD F. *Tape Recorders—How They Work*. New York: Howard W. Sams, 1965.

Principles of magnetic recording, mechanisms and components, types of tape recorders, and test procedures.

Instrument Applications, Systems and Studio Design

This listing contains references to instrument manuals, patchbooks, and technical information concerning studio design. Even though a particular user's guide and/or patchbook is written for a specific instrument, the reader will, nevertheless, find it valuable as a source of patch variations and new ideas for instrument configuration. The availability of certain materials in this section depends on the distribution policy of the institutions and manufacturers involved.

ARP Instruments Patchbooks; 45 Hartwell Avenue, Lexington, Mass., 02173.

Axxe Patch Book
Odyssey Patch Book
2600 Patch Book

DEVARAHI. *The Complete Guide to Synthesizers*. New Jersey: Prentice-Hall, 1981.

Ignore the pretentious title. This is a first rate introduction to keyboard and small studio systems. Loads of nifty patches. Highly recommended.

DOUGLAS, ALAN. *Electronic Music Production*. Blue Ridge, Pa.: Tab Books, 1974.

Chapters on properties of acoustic instruments, scales and tunings and electronic music. The beginning designer may be interested in the schematics.

CHAMBERLIN, HAL. *Musical Applications of Micro-Processors*. New Jersey: Hayden Book Company, Inc., 1980.

An excellent generalized overview of analog synthesis techniques with suggested parallel systems and techniques with digital software and hardware. A good introduction into the digital world. Recommended.

CLIFFORD, MARTIN. *How To Use Your VOM, VTVM and Oscilloscope*. Blue Ridge Summit, Pa.: TAB Books, 1968.

Explanation of operation and servicing with the VOM, VTVM and oscilloscope. Covers meter movements, scales, applications, and measurements.

COOMBS, C. F., JR. *Printed Circuits Handbook*. New York: McGraw-Hill, 1967.

Knowledge of printed circuit techniques will save the builder a great deal of time in circuit construction. This manual covers all phases of the printed circuit processes.

CROWHURST, NORMAN H. *Audio Systems Handbook*. Blue Ridge Summit, Pa.: TAB Books, 1969.

General information covering amplifiers, equalizers, mixers, stereophony, noise, suppression, reverberation, and considerations for an integrated system. Highly recommended.

D.B.—The Sound Engineering Magazine. Plainview, N.Y.: Sagamore Publishing Company.

A monthly publication of articles on acoustics, recording techniques, circuits, and writing of general interest to the audio engineer. Highly recommended.

DEUTSCH, HERBERT A. *Synthesis—An Introduction, Theory and Practice of Electronic Music*. New York: Alfred Publishing Co., Inc., 1976.

This is a very useful book for the reader who wishes to get a basic and general overview of the history and technology of the media. Not greatly detailed but good general reading for a beginning, short-term electronic music class.

DEZETTLE, L. M. *ABC's Of Electrical Soldering*. New York: Howard W. Sams, 1971.

A survey of soldering theory, techniques, types of irons, and safety considerations.

ENKEL, FRITZ. *The Technical Facilities of the Electronic Music Studio (of Cologne Broadcasting Station)*. Ottawa: National Research Council of Canada, Technical Translation TT-603, 1956.

HORN, DENTON T. *Electronic Music Synthesis*. Blue Ridge Summit, Pa.: Tab Books, 1980.

A basic introduction to Moog, Ard. Oberheim. EML and RM1 instruments. Includes some basic circuits.

HOWE, HUBERT. *Buchla Manual*. Fullerton, Calif.: CBS Musical Instrument Research Department, 1300 East Valencia Street, 92631.

This CBS Buchla owner's manual is an excellent introduction to voltage-control concepts and a good description of the Buchla Function Modules.

——. *Composer's Manual*. New York: Queens College, Department of Music, Electronic Music Studio.

Description of the Queens College Electronic Music Studio including operation of the Moog and Buchla 100 Systems and information concerning the amplifiers, tape recorders, speakers, and miscellaneous equipment.

FRIEND, DAVID, ALAN R. PEARLMAN and THOMAS D. PIGGOT. *Learning Music with Synthesizers*. Massachusetts: Hall Leonard Publishing Corp., 1974.

A rather misleading title. This is actually a textbook for beginning electronic music classes with the Arp Odyssey. Recommended to beginning Odyssey owners.

HOWE, HUBERT S., JR. *Electronic Music Synthesis*. New York: W. W. Norton & Co., 1975.

Chapters on Acoustics and Psychoacoustics, Electronic Music Equipment and Computers and Electronic Music. Recommended.

JENKINS, JOHN and JON SMITH. *Electric Music—A Practical Manual*. Indiana: Indiana University Press, 1975.

A guide to electronic music concert performance. Deals with sound sources, amps and speakers, stage set-up, performance, recording and one chapter on patching. This is the American edition of a British book so it is very Synthi oriented.

Journal of the Audio Engineering Society. New York: 124 East 40th Street. 10016.

A monthly publication of articles on all aspects of audio, acoustics, electronic music and perception.

JUDD, E. C. *Electronic Music and Music Concrete*. London: Neville Spearman, Ltd., 1961.

A non-technical overview of classic studio techniques and basic tube circuits used in electronic music.

LEWIS, ROBERT. *Electronic Construction Practices*. Wilton, Conn.: Radio Publications, Inc., 1961.

Tips and techniques on uses of tools, equipment planning and layout, metal working, wiring and assembly. Recommended for all involved with circuit design.

MATHEWS, MAX V. *Technology of Computer Music*. Cambridge, Mass., MIT Press, 1969.

A very well written explanation of digital sound production techniques. Very complete and comprehendible by the layman. Highly recommended.

MCLACHLAN, N. W. *Loudspeakers*. New York: Dover Publications, 1960.

A semi-technical discussion of loudspeaker designs and problems.

PELLIGRINO, RONALD. *An Electronic Studio Manual*. Columbus, O.: Ohio State University, College of the Arts, Publication #2, 1969.

A general manual for the Moog System with accompanying taped examples. A catalogue of 'favorite patches' which the composer may find useful.

Polyphony. Oklahoma City, OK. P.O. Box 20305, 73156.

Initial issues were very PAIA oriented but later issues contain good information about composers, performers and patch applications.

RHEA, TOM. *Minimoog Sound Charts*. Illinois: Norlin, 7373 Cicero Ave., Lincolnwood, 60646

Rolandcorp U. S. *Roland System 100/102/102 Patch Book*. Los Angeles: 2401 Saybrook, California 90230.

SEAR, WALTER. *The New World of Electronic Music*. New York: Alfred Publishers, 1972.

Good beginning text for Moog users.

The Source-Book of Patching and Programming from Polyphony. Oklahoma: Polyphony Publishing Co., 1978

A collection of patches collected from Polyphony Magazine. The patches are based around the PAIA instruments but are generally notated for other applications. Contains some clever applications from *Polyphony subscribers*.

SPRINGER, PHILIP. *Switched On Synthesizer*. Hollywood: Alamo Press, 1977.

Arrangements of various pop tunes for keyboard synthesizers. Patches are given on Arp Odyssey and Minimoog patch sheets plus general patch notation for other instrument applications. Recommended for the beginner interested in popular music applications.

SUBOTNICK, MORTON. *The Use of the Buchla Synthesizer in Musical Composition*. New York: Audio Engineering Society Reprint 709, 1970.

A review of the Buchla System sound sources, modifying modules, control modules, and several interesting patches.

TRYTHALL, GILBERT. *Principles and Practice of Electronic Music*. New York: Grosset & Dunlap, 1973.

Clearly intended for Moog instrument users. Very clear and a good beginning text for Moog studios.

VILLCHUR, EDGAR. *Reproduction of Sound*. New York: Dover Publishers.

A thorough coverage for the layman on hi-fi systems, general reproduction systems, preamps, speakers and simple circuit theory.

WELLS, THOMAS, and ERIC S. VOGEL. *The Techniques of Electronic Music*. New York: Schirmer Books, 1981.

Very good technical reference with generally notated patches. A real studio handbook with a European approach to the art.

Acoustics and Physics

Information on the physical behavior of sound and psychoacoustic considerations of music. Although some of the books in this section may not be directly related to electronics, any practical musician, involved in electronics or not, will find that a basic understanding of acoustics and the physics of sound is essential to the workings of his art.

Acoustics Handbook—Application Note 100. Palo Alto, Cal.: Hewlett-Packard Company, 5101 Page Mill Rd.

Excellent reference on acoustics and psycho-acoustics. Recommended.

BACHUS, JOHN. *The Acoustic Foundations of Music*. New York: W. W. Norton and Company, 1969.

This is one of the best contemporary books on musical acoustics covering basic acoustic principles, hearing, intervals, tuning, environments and sound production. Highly recommended.

BENADE, ARTHUR H. *Fundamentals of Musical Acoustics*. London: Oxford University Press, 1976.

An excellent new study of musical acoustic systems. Contains a wealth of new information written in a nontechnical language. Highly recommended.

COKER, CECIL H.; DENES, P. B.; and PINSON, E. N. *Speech Synthesis*. Bell Telephone Laboratories, Inc., 1963.

A manual designed to accompany a speech synthesizer kit which demonstrates formant production in human speech. The manual covers speech synthesis, linguistic organization and the physics of sound.

CHOWNING, JOHN. *The Simulation of Moving Sound Sources*. New York: Audio Engineering Society Reprint No. 726, 1970.

A report on computerized methods of location modulation including a discussion of location cues in hearing and possible control envelopes. Highly recommended.

DOUGLAS, ALAN. *The Electrical Production of Music*. New York: The Philosophical Library, 1957.

Covers the physics of musical instruments, scales, intervals, harmonic analysis of transient phenomenon, oscillators, electrical tone production, and speakers.

ERICKSON, ROBT. *Sound Structure in Music*. Berkeley: University of California Press, 1975.

A highly documented writing dealing with the problems of unraveling the mysteries of music timbre. Highly recommended.

ERICKSON, ROBERT, ed. "Timbre Seminar Readings," in "Four Views of the Music Department at the University of California at San Diego," *Synthesis*, Vol. 1, Issue 2, 1971.

A bibliography of writings on general timbre, attacks, spectrum, formant, phase, loudness, modulation, noise, space, reverberation and timbral organization and structure. Highly recommended.

HELMHOLTZ, HERMANN. *On The Sensations of Tone*. New York: Dover Publications, trans. A. J. Ellis, 1954.

A classic reference on early acoustical studies of resonating systems, pitch, and tuning. Highly recommended.

JOSEPHS, J. J. *The Physics of Musical Sound*. Princeton, N. Y.: D. Van Nostrand Company, Inc., 1967.

Covers basic vibratory phenomenon, hearing and the ear, tuning systems, musical systems, synthesized sound, musical instruments and recording and reproduction considerations.

The Journal of the Acoustical Society of America. New York: American Institute of Physics, 335 East 45th Street, 10017.

Papers on architectual and physical engineering, underwater and musical acoustics, noise, physical acoustics and perception. Semi-technical.

LEVARIE, SIGMUND, and LEVY, E. *Tone—A Study in Musical Acoustics*. Ohio: Kent State University Press, 1968.

A very interesting and unique introduction to musical acoustical systems beginning with an in-depth semi-technical and philosophical discussion of intervals, wave properties and timbre. Also sections on all classifications of instruments and sound production. This book also contains a lot of historical information from a variety of sources. Highly recommended.

MOLES, A. A. *Information Theory and Aesthetic Perception*, trans. Joel E. Cohen. Urbana, Ill.: University of Illinois Press, 1966.

Although this book is primarily a theoretical approach to aesthetic applications of information theory (primarily in music), there is also a great deal of information concerned with musical perception and psycho-acoustics. Highly recommended.

OLSON, HARRY F. *Music, Physics and Engineering*. New York: Dover Publications, 1967.

Originally published in 1952 under the title of *Musical Engineering*, this edition deals with musical acoustics, chapters on scales, instruments and their characteristics, studio and room acoustics and an excellent chapter on electronic music methods and apparatus.

PIERCE, J. R., and DAVID E. E., JR. *Man's World of Sound*. New York: Doubleday and Company, Inc., 1958.

A variety of material concerning speech, hearing, waves, resonators, and the acoustics of speech. This book may also serve as a layman's introduction to communication science.

RETTINGER, MICHAEL. *Acoustics-Room Design and Noise Control*. New York: Sagamore Publications, 1968.

Covers the problems and hazards of noise, physics of sound, room acoustics and noise reduction.

ROEDERER, JUAN G. *Introduction to the Physics and Psychophysics of Music*. New York, Heidelberg, Berlin: Springer-Verlag, 1973.

For the musician this is probably the best book on psycho-acoustics of music available. Very readable and highly recommended.

SCHANZ, G. W. *Stereo Handbook*. New York: Drake Publishers, Ltd., 1970.

Covers the fundamentals of stereo sound perception, stereophony, transmission and reception of stereophonic information and testing techniques. An excellent introduction to stereophony. Highly recommended.

TAYLOR, C. A. *The Physics of Musical Sounds*. New York: American Elsevier Publishing Company, Inc., 1965.

An analysis of musical sound production, harmonic and Fourier analysis, amplification and sound perception. Highly recommended.

WINCKEL, FRITZ. *Music, Sound and Sensation*, trans. T. Binkley. New York: Dover Publications, 1967.

An excellent book on the theory of sound, acoustics and psychoacoustics. A wealth of information on the psychoacoustics. A wealth of information on the physical properties of sound behavior which is essential information to the composer. Highly recommended.

WOOD, ALEXANDER. *The Physics of Music*. London: University Paperbacks, 1962.

This book covers the area between physics and music, vibration systems, musical quality, temperament, room acoustics, recording and reproduction. A bit dated but interesting reading.

Industrial References

This is a listing of companies and manufacturers producing equipment and components used in the field of electronics and electronic music. Although the individual reader may not be in a position to take practical advantage of the equipment, the catalogues and specification sheets which are usually supplied by the companies give many insights into new applications and circuit designs. The reader will find that being placed on the mailing lists is an excellent method of keeping informed of new equipment and circuit designs.

Ampex—Professional Audio Products Division, 401 Broadway, Redwood City, Cal. 94063
Acoustic Research, 24 Thorndike Street, Cambridge, Mass. 02141
Agfa-Gevaert AG, 509 Leverkusen, Vertrieb Magneton, West Germany
Allied/Radio Shack, Department RE-1, 2725 West 7th Street, Fort Worth, Texas 76107
Altec-Lansing, 1515 South Manchester Avenue, Anaheim, Calif. 92803
Automated Processes, Inc., 35 Central Drive, Farmingdale, New York 11735
Countryman Associates, 424 University Avenue, Palo Alto, Calif. 94302
dbx, Inc., 296 Newton St., Waltham, Mass. 02154
Dolby Laboratories, 345 Clapham Road, London SW9, England
Dynaco Inc., 3060 Jefferson Street, Philadelphia, Pa. 19121
Edital Tape Splicing Equipment, Elpha Marketing Industries, Inc., New Hyde Park, New York
Edmund Scientific Company, 300 Edscorp Bldg., Barrington, New Jersey 08007
EICO, 283 Malta Street, Brooklyn, New York 11207
Electro-Voice, Department 811 BU, 645 Cecil Street, Buchana, Mich. 49107
Fairchild Sound Equipment Corporation, 10-40 45th Avenue, Long Island City, New York 11101
Gately Electronics, 57 West Hillcrest Avenue, Harvertown, Pa. 19083
Gotham Audio Corporation, 2 West 46th Street, New York 10036
Heathkit, Benton Harbor, Mich. 49002
Hybrid Systems Corporation, 95 Terrace Hall Avenue, Burlington, Mass. 01803
KLH Research and Development Corporation, 30 Cross Street, Cambridge, Mass. 02139
Langevin-MCA Tech, 13035 Statcoy Street, Hollywood Calif. 91605
McIntosh Amplifiers Laboratory, Inc., 2 Chambers Street, Binghamton, New York 13903
Olson Electronics, Department LR-260, South Forge Street, Akron, Ohio
Parasound, 680 Beach Street, San Francisco, Calif. 94109
Revox Corporation, 155 Michael Drive, Syosset, New York 11791
3M Company, St. Paul, Minn. 55101
Scully Recording Instruments Company, 480 Bunnell Street, Bridgeport, Conn. 06607
Senheiser, 500 Fifth Avenue, New York 10036
Shure Brothers, Inc., 222 Hartrey Avenue, Evanston, Ill. 60204
Sony Corporation of America, 47-47 Van Dam Street, Long Island City, New York 11101
Southwest Technical Products Corporation, 219 West Rhapsody, San Antonio, Texas 78216
Spectrum Instruments, Inc., 102 Columbus Avenue, Box 474, Tuchahoe, New York 10717
Switchcraft, Inc., 5555 North Elston Avenue, Chicago, Ill. 60630
Teac Corp. of America, 7733 Telegraph Rd., Montebello, Calif. 90640

Electronic Music Instrument and Equipment Manufacturers

This listing was developed from a periodical list appearing in *Synapse*, 2829 Hyans Street, L.A. California, 90026. *Synapse* is no longer in print and the reader may wish to double check for any address changes.

Advanced Tools for the Arts, P.O. Box 825. Tempe, Ariz. 85281
Analog/Digital Associates, 2316 Fourth St., Berkeley, Cal. 94710
Aries Music Inc., P.O. Box 3065. Salem, Mass. 01970
ARP Instruments, Inc. This company is no longer in business but ARP owners may inquire at Chicago Music Dealers Service, 4700 W. Fullerton Ave., Chicago, Ill. 60639 regarding repair work.
Audio Arts, Inc., 5615 Melrose Ave., Hollywood, Cal. 90038
Blacet Music Research, 18405 Old Monte Rio Rd., Guerneville, CA 95446
Bode Sound Company, 1344 Abington Place, North Tanawanda, N.Y. 14120
Buchla, Box 5051, Berkeley, Calif. 94705
CFR Associates, Box F, Newton, N.H. 03858
Computone Inc./Lyricon, P.O. Box 433, Norwell, Mass. 02061
Concert Company, 3318 Platt Avenue, Lynwood, Calif. 90262
Dataton AB, Box 257, 2-581 02 Linkoping, Sweden
DBL Electronics, 83 Morgan Circle, Amherst, Mass. 01002
Dennis (Electronic Music Components) 2130 Metcalf, Honolulu, Hawaii 96822
Electrax, P.O. Box 149, Tarzana, California 91356
Electron Farm/Harvest, Gregory Kramer, 135 W. Broadway, New York, N.Y. 10013
Electronic Music Laboratories, P.O. Box H, Vernon Conn. 06066
Electronic Music Studios, The Priority, Great Milton, Oxford, England
Eu Instruments, 417 Broadway, Santa Cruz, Calif., 95060
Eventide Clockworks, Inc., 265 W. 54th Street, New York, N.Y. 10019
Farfisa, 1330 Mark St., Elkgrove Village, Ill. 60007
Galaxy Systems, P.O. Box 2475, Woodland Hills, Cal. 91364
Gentle Electric, 140 Oxford Way, Santa Cruz, Cal. 95060
Heuristics, Inc., 900 N. San Antonio Rd., Los Altos, Cal. 94022
Inner Space Electronics, Box 308, Berkeley, Cal. 94701
Ionic Industries, 128 James St., Morristown, N.J. 07960
Korg/Unicord, 75 Frost Street, Westbury, N.Y. 11590
Logistics, Box 9970, Marina Del Rey, Cal. 90291
MCI, Inc., 7400 Imperial Dr., Box 8053, Waco, TX 76710 (817) 772-4450
Media Mix, 4060 Stanford, Dallas, Texas 75225
Micor, P.O. Box 20885, Phoenix, AZ 85036 (602) 273-4111
MM Electronics, French's Mill, French's Rd., Cambridge, England CB4 3NP
Moog/Norlin, 7373 North Cicero Ave., Lincolnwood, Ill. 60646. Customer Service: 2500 Walden Ave., Buffalo, N.Y. 14225

Musicomputer, P.O. Box 1070. Canyon Country, CA 91351

Music Technology/Crumar, 105 Fifth Ave., Garden City Park, N.Y. 11040

Musitronics Corporation, Sound Lab 10, Rosemount, N.J. 08556

MXR Innovations, 277 N. Goodman Street, Rochester, New York, 14607

New England Digital Corp., P.O. Box 305, Norwich Vermont 05055

Oberheim Electronics, 1549 Ninth St., Santa Monica, Calif. 90401

Octave Electronics Inc., 35-73 Steinway St. Long Island City, N.Y. 11103

Octron, 1346 Bayport Avenue, San Carlos, Calif. 94070

Omniphon, Box 166, Churchill Rd., Mason, N.H. 03048

Oznie Process Electronics, Box 7, Centerville, Penn. 16404

PAIA, Box 14359, Oklahoma City, Okla. 73114

Pollard Industries, Ind., 9014 Lindblade St. Culver City, Cal. 90230

Polyfusion Inc., 160 Sugg Road, Buffalo, N.Y. 14225

Rhoads-Chroma, 1300 East Valencia Drive, P.O. 4137, Fullerton, Calif. 92634.

Rocky Mount Instruments, Inc., Macungie, Penn. 18062

Rolandcorp U.S., 2401 Saybrook, L.A., Cal. 90040

Saputelli Music Systems, P.O. Box 40267, San Francisco, Cal. 94140

Scalatron/Motorola, 2130 N. Palmer Dr., Schaumburn, Ill. 60196

Sequential Circuits, 3051 North First St., San Jose, Calif. 95134

Serge Modular Music, 1107-1/2 N. Western Ave., Hollywood, Calif. 90029

Software Technology Corp., P.O. Box 5260, San Mateo, Cal. 94402

Solid State Music, 2102A Walsh Ave., Micro Technology 2076B Walsh, Santa Clara, Cal. 95050

Star Instruments Inc., Box 71, Stafford Springs, Conn. 06076

Steiner-Parker, 2258 South, 2700 West, Salt Lake City, Utah 84119

Stramp, 3-2000 Hamburg 53, Bomheide 19, Germany

Strider Systems, P.O. Box 2934, Norman, Okla. 73070

Syn-Cordian, 32:73 Steinway St., Long Island City, N.Y. 11103

Syn-Key, 114 W. Hintz Road, Wheeling, Ill. 60090

THINC-Technical Hardware Inc., P.O. Box 3609, Fullerton, Calif. 92634

VAKO Synthesizers Inc., 4651 62nd Avenue North, Saint Petersburg, Florida 33565

Wavemakers, P.O. Box 27, Edmonds, Wash. 98020

Yamaha International, Box 6600, Buena Park, Calif. 90620

360 Systems, (213) 384-8447, 2825 Hyans Street, Los Angeles, Calif. 90026

Index